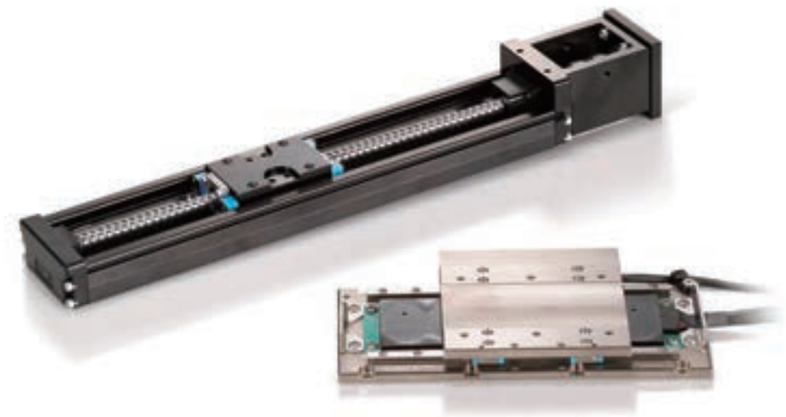



POSITIONING TABLES

Recognizing that conservation of the global environment is the top-priority challenge for the world's population, Nippon Thompson will conduct its activities with consideration of the environment as a corporate social responsibility, reduce its negative impact on the environment, and help foster a rich global environment.

ISO 9001 & 14001 Quality system registration certificate

ISO 9001 Certified
ISO 14001 Certified

- The specifications and dimensions of products in this catalog are subject to change without prior notice.
- When these products are exported, the exporter should confirm a forwarding country and a use, and, in case of falling under the customer's requirements, take necessary procedures such as export permission application.
- Although all data in this catalog has been carefully compiled to make the information as complete as possible, NIPPON THOMPSON CO., LTD. shall not be liable for any damages whatsoever, direct or indirect, based upon any information in this catalog. NIPPON THOMPSON CO., LTD. makes no warranty, either express or impiled, including the impiled warranty of merchantability or fitness for a particular purpose.
- Reproduction and conversion without permission are prohibited.

CAT-1589E Printed in China ©2021.08 (AKA)

Good Environment and Good Quality









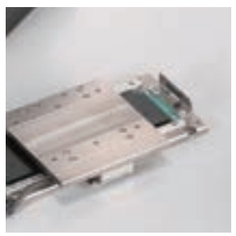







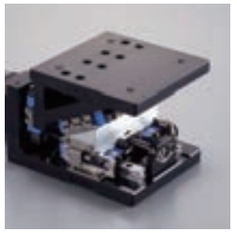









IKO Precision Positioning Table is a product brought out from an integration of the linear motion rolling guide technology, which we have developed for many years, and the state-of-the-art technology in microelectronics.
IKO Precision Positioning Table is composed of many leading-edge components carefully chosen to meet stringent needs. In the table guiding parts in particular, IKO linear motion rolling guide, which has been well proven in the fields of super precision machines and machine tools, is incorporated to make full use of their high potentials.
IKO Precision Positioning Table has proven its excellent performance through a wide range of applications as a positioning mechanism for the state-of-the-art LCD and semiconductor manufacturing facilities such as a variety of measuring equipments, processing machines, and assemblers.

Types of Mechatronics Series

	Drive model	
Ball screw drive	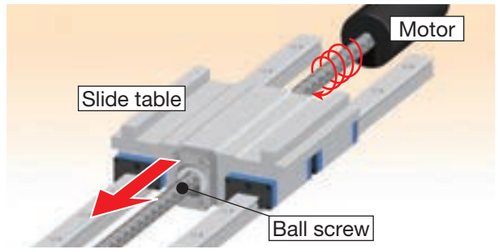	
Linear motor drive Moving magnet	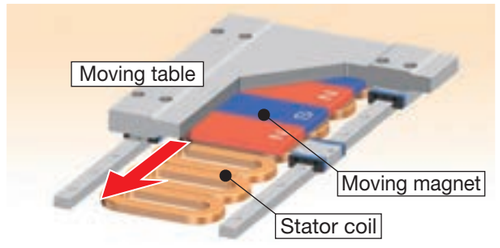	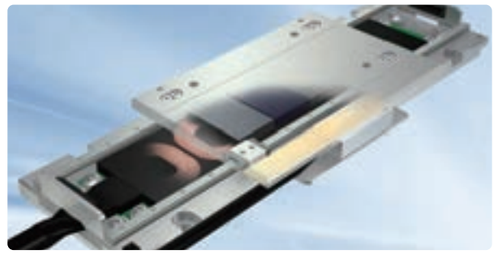
Linear motor drive Moving coil	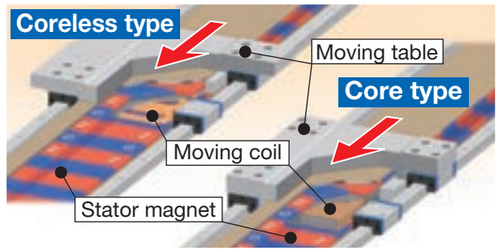	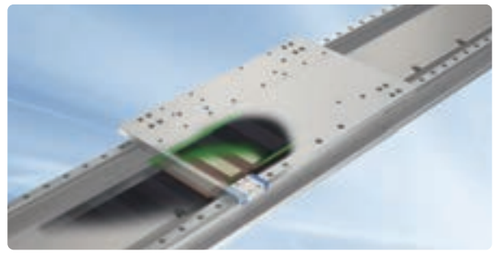
Timing belt drive	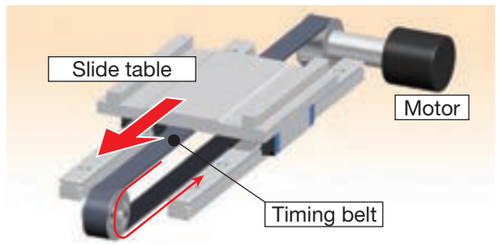	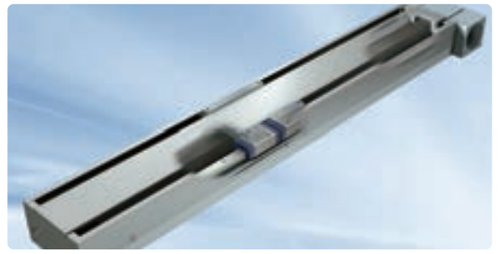
Worm gear drive	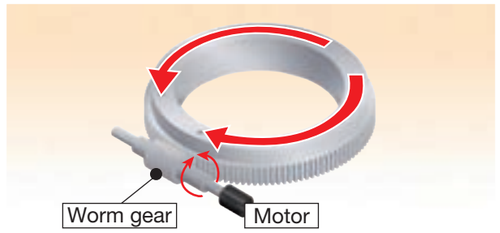	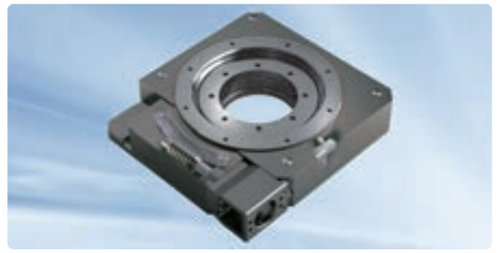

Characteristics of Mechatronics Series

	Motion direction	Stroke length	Thrust force	Speed	Acceleration	Positioning accuracy
Ball screw drive	Linear, Vertical, Alignment	○	◎	○	△	○
Linear motor drive Moving magnet	Linear, Alignment	△	△	◎	◎	◎
Linear motor drive Moving coil	Linear	◎	△	◎	◎	◎
Timing belt drive	Linear	◎	○	◎	◎	△
Worm gear drive	Rotation	◎	◎	△	△	○

Code description ◎Excellent ○Good △Fair

MECHATRONICS SERIES INDEX

Precision Positioning Table TE

- High-strength aluminum alloy is used for main components
- Light weight, low profile and compact positioning table

Ball screw drive
Linear



TE···B

Ⅱ-4

Precision Positioning Table TU

- High rigidity U-shaped track rail adopted
- Various table specifications are available according to your use.

Ball screw drive
Linear



TU

Ⅱ-32

Precision Positioning Table L

- Standard type highly-proven in various fields
- Parallel arrangement of Linear Ways with stable performance

Ball screw drive
Linear



TSL···M

Ⅱ-102

Precision Positioning Table LH

- Component parts from rigorous selection ensure high accuracy and reliability.
- High rigidity and large carrying mass

Ball screw drive
Linear



TSLH···M
CTLH···M

Ⅱ-122

Super Precision Positioning Table TX

- Achieved ultimate positioning performance with rolling guide type
- High accuracy attained by fully-closed loop control

Ball screw drive
Linear



TX···M
CTX···M

Ⅱ-150

Cleanroom Precision Positioning Table TC

- Optional for use in high cleanliness environment for semiconductor and LCD manufacturing machines
- Light weight, low profile and compact positioning table

Ball screw drive
Linear



TC···EB

Ⅱ-170

Micro Precision Positioning Table TM

- Ground ball screw drive realizes ultra-small size with sectional height of 20mm and width of 17mm.
- High positioning accuracy and excellent durability

Ball screw drive
Linear



TM

Ⅱ-186

Precision Positioning Table TS/CT

- Compact structure with low profile
- Crossed Roller Way guaranteeing high reliability and high accuracy

Ball screw drive
Linear

TS



CT



Ⅱ-202

Precision Positioning Table LB

- High-speed type using a timing belt drive
- Parallel arrangement of Linear Way ensures stable and high operating performance.

Timing belt drive
Linear

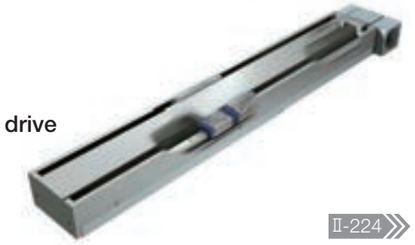

TSLB

Ⅱ-224

Nano Linear NT

- Pursuing ultimate compactification
- Very low profile of NT38V: only 11mm
- A wide variety of selections support optimal choice according to your use.

Linear motor drive
Linear

NT···V | NT···XZ
NT···H | NT···XZH



Ⅱ-236

Alignment Stage SA

- Sectional height of 3 axes X, Y and θ is only 52mm (SA65DE).
- X- and Y-axis: 0.1μm, θ-axis: excellent resolution as high as 0.36 sec (SA120DE)

Linear motor drive
Alignment
Linear

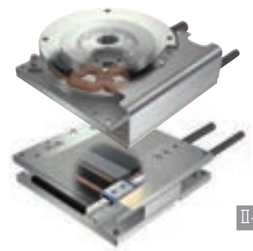

SA···DE

Ⅱ-266

Linear Motor Table LT

- Both high speed and high resolution are achieved.
- High acceleration / deceleration, high response and smooth operations
- Long term maintenance free specification with C-Lube built in

Linear motor drive
Linear

LT···CE | LT···H
LT···LD

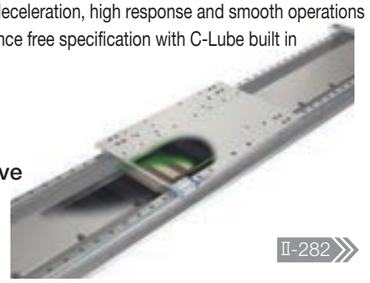

Ⅱ-282

Alignment Table AT

- High accuracy positioning ensuring precise angle correction
- Crossed Roller Bearing ensures high rigidity and compactness.

Ball screw drive
Alignment

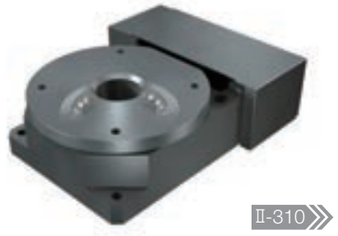

AT

Ⅱ-310

Rotation Stage SK

- Crossed Roller Bearings ensure high rigidity and compactness
- Allows smooth, high-accuracy positioning
- Direct mounting of the table or test object reduces labor hours required for design work

Worm gear drive
Rotation



SK···W

Ⅱ-322

Alignment Module AM

- Supports free designing of stage according to your use
- Control tolerance of height within ±10μm

Ball screw drive
Alignment



AM

Ⅱ-330

Precision Elevating Table TZ

- Unique wedge mechanism ensures compact and high accuracy vertical positioning.
- TZ···X achieving high accuracy and high rigidity through adoption of C-Lube Linear Roller Way Super X

Ball screw drive
Vertical

TZ···H | TZ···X



Ⅱ-344

A Variety of Models and Variations



Precision Positioning Table TE

Ball screw drive

TE…B

Linear

- High-strength aluminum alloy is used for main components
- Light weight, low profile and compact positioning table
- High accuracy positioning
- Long term maintenance free specification with C-Lube built in
- Excellent cost performance

Specification

Model and size	Maximum stroke (mm)	Maximum speed (mm/s)	Ball screw lead (mm)
TE50B	410	800	4, 8
TE60B	600	1 000	5, 10, 20
TE86B	800	1 860	10, 20

Accuracy

Positioning repeatability	○
Positioning accuracy	○
Lost motion	—
Parallelism in table motion A	—
Parallelism in table motion B	○
Attitude accuracy	—
Straightness	—
Backlash	○

See page Ⅱ–4

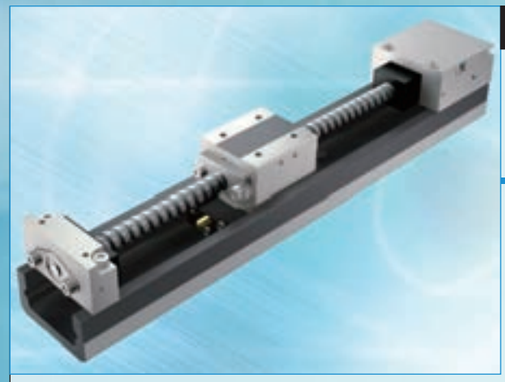

Precision Positioning Table TU

Ball screw drive

TU

Linear

- Original high rigidity U-shaped track rail adopted
- Various table specifications are available according to your use.
- Slide table with high accuracy and high rigidity in a single structure
- Easy ordering just by specifying the identification number for the required functions and performance

Specification

Model and size	Maximum stroke (mm)	Maximum speed (mm/s)	Ball screw lead (mm)
TU 25	100	400	4
TU 30	230	500	5
TU 40	285	800	4, 8
TU 50	560	1 000	5, 10
TU 60	1 010	1 860	5, 10, 20
TU 86	1 400	1 480	10, 20
TU100	1 140	1 110	20
TU130	1 260	1 110	25

Accuracy

Positioning repeatability	○
Positioning accuracy	○
Lost motion	—
Parallelism in table motion A	—
Parallelism in table motion B	○
Attitude accuracy	—
Straightness	—
Backlash	○

See page Ⅱ–32



Precision Positioning Table L

Ball screw drive

TSL…M

Linear

- Standard type highly-proven in various fields
- Parallel arrangement of Linear Ways with stable performance
- High running accuracy and positioning accuracy
- Many size variations support easy multi-axis system configurations.
- Long term maintenance free specification with C-Lube built in

Specification

Model and size	Maximum stroke (mm)	Maximum speed (mm/s)	Ball screw lead (mm)
TSL 90 M	300	500	5, 10
TSL 120 M	600	500	5, 10
TSL 170 M	500	500	5, 10
TSL 170S M	1 000	500	5, 10
TSL 220 M	1 000	500	5, 10

Accuracy

Positioning repeatability	○
Positioning accuracy	○
Lost motion	—
Parallelism in table motion A	—
Parallelism in table motion B	○
Attitude accuracy	—
Straightness	—
Backlash	○

See page Ⅱ–102



Precision Positioning Table LH

Ball screw drive

TSLH…M (Single-axis specification)

CTLH…M (Two-axis specification)

Linear

- Component parts from rigorous selection ensure high accuracy and reliability.
- High rigidity and large carrying mass
- High running accuracy and positioning accuracy
- The series including ultra large size with table width of 420mm
- Long term maintenance free specification with C-Lube built in

Specification

Model and size	Maximum stroke (mm)	Maximum speed (mm/s)	Ball screw lead (mm)
TSLH120M	300	500	5, 10
TSLH220M	400	500	5, 10
TSLH320M	500	448	5, 10
TSLH420M	800	448	5, 10
CTLH120M	300 × 300	500	5, 10
CTLH220M	400 × 400	500	5, 10
CTLH320M	500 × 500	448	5, 10

Accuracy

Positioning repeatability	○
Positioning accuracy	○
Lost motion	—
Parallelism in table motion A	○
Parallelism in table motion B	—
Attitude accuracy	—
Straightness	◎
Backlash	◎

See page Ⅱ–122

1N=0.102kgf=0.2248lbs.
1mm=0.03937inch

A Variety of Models and Variations



Super Precision Positioning Table TX

Ball screw drive

TX···M (Single-axis specification)

CTX···M (Two-axis specification)

Linear

- Achieved ultimate positioning performance with rolling guide type
- Fully-closed loop control equipped with super high accuracy linear encoder ensuring high accuracy
- Control method selectable according to needs
- Long term maintenance free specification with C-Lube built in

Specification

Model and size	Maximum stroke (mm)	Maximum speed (mm/s)	Ball screw lead (mm)
TX 120M	300	500	5, 10
TX 220M	400	500	5, 10
TX 320M	500	448	5, 10
TX 420M	800	448	5, 10
CTX120M	300 × 200	500	5, 10
CTX220M	400 × 300	500	5, 10

Accuracy

Positioning repeatability	◎
Positioning accuracy	◎
Lost motion	◎
Parallelism in table motion A	◎
Parallelism in table motion B	—
Attitude accuracy	◎
Straightness	◎
Backlash	◎

See page Ⅱ–150



Cleanroom Precision Positioning Table TC

Ball screw drive

TC···EB

Linear

- Optional for use in high cleanliness environment for semiconductor and LCD manufacturing machines
- Light weight, low profile and compact positioning table
- Compatible with cleanliness class 3
- Long term maintenance free specification with C-Lube built in

Specification

Model and size	Maximum stroke (mm)	Maximum speed (mm/s)	Ball screw lead (mm)
TC50EB	200	400	4, 8
TC60EB	500	500	5, 10
TC86EB	800	1 000	10, 20

Accuracy

Positioning repeatability	○
Positioning accuracy	○
Lost motion	—
Parallelism in table motion A	—
Parallelism in table motion B	○
Attitude accuracy	—
Straightness	—
Backlash	○

See page Ⅱ–170



Micro Precision Positioning Table TM

Ball screw drive

TM

Linear

- Ground ball screw drive realizes ultra-small size with sectional height of 20mm and width of 17mm.
- High positioning accuracy and excellent durability
- Two types of slide table shapes selectable according to needs
- Super-miniature sensor can be built in.

Specification

Model and size	Maximum stroke (mm)	Maximum speed (mm/s)	Ball screw lead (mm)
TM15	60	75	0.5, 1.0, 1.5
TM15G	50	75	0.5, 1.0, 1.5

Accuracy

Positioning repeatability	○
Positioning accuracy	○
Lost motion	—
Parallelism in table motion A	—
Parallelism in table motion B	—
Attitude accuracy	—
Straightness	—
Backlash	—

See page Ⅱ–186



Precision Positioning Table TS/CT

Ball screw drive

TS (Single-axis specification)

CT (Two-axis specification)

Linear

- Compact structure with low profile
- Crossed Roller Way guaranteeing high reliability and high accuracy positioning
- Compact design achieved by utilizing wide area of slide table

Specification

Model and size	Maximum stroke (mm) X-axis	Maximum stroke (mm) Y-axis	Maximum speed (mm/s)	Ball screw lead (mm)
TS 55/ 55	± 7.5		30	1
TS 75/ 75	± 12.5		30	1
TS125/125	± 25		250	1, 2, 5
TS125/220	± 60		250	2, 5
TS220/220	± 60		250	2, 5
TS220/310	± 90		250	2, 5
TS260/350	±125		250	2, 5
CT 55/ 55	± 7.5	± 7.5	30	1
CT 75/ 75	± 12.5	± 12.5	30	1
CT125/125	± 25	± 25	250	1, 2, 5
CT220/220	± 60	± 60	250	2, 5
CT260/350	± 75	±125	250	2, 5
CT350/350	±125	±125	250	2, 5

Accuracy

Positioning repeatability	○
Positioning accuracy	○
Lost motion	—
Parallelism in table motion A	◎
Parallelism in table motion B	○
Attitude accuracy	—
Straightness	—
Backlash	○

See page Ⅱ–202

1N=0.102kgf=0.2248lbs.
1mm=0.03937inch

A Variety of Models and Variations



Precision Positioning Table LB

Timing belt drive

TSLB

Linear

- Timing belt drive achieves high speed travel at 1,500mm/s.
- Parallel arrangement of Linear Way ensures stable and high operating performance.
- Long stroke up to 1,200mm

Specification

Model and size	Maximum stroke (mm)	Maximum speed (mm/s)	Resolution (mm)
TSLB 90	600	1 500	0.1
TSLB120	1 000	1 500	0.1
TSLB170	1 200	1 500	0.1

Accuracy

Positioning repeatability	△
Positioning accuracy	—
Lost motion	—
Parallelism in table motion A	—
Parallelism in table motion B	△
Attitude accuracy	—
Straightness	—
Backlash	—

See page Ⅱ–224

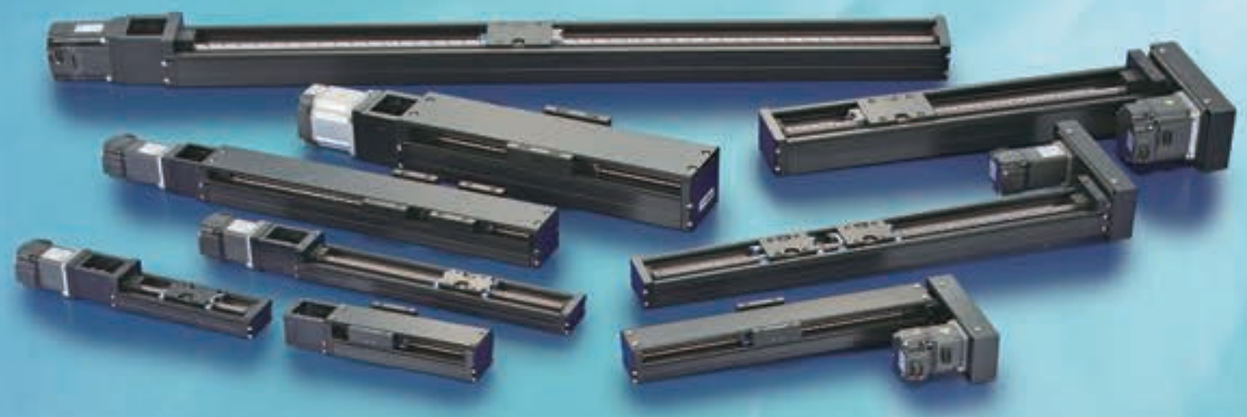

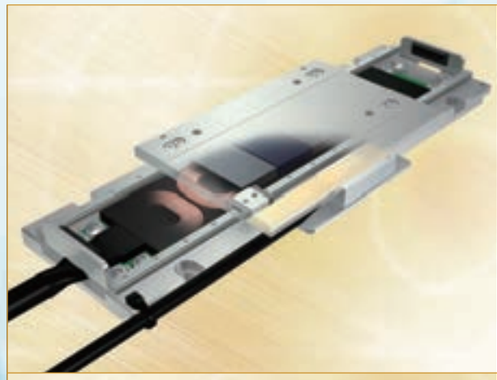

Nano Linear NT

Standard Type

NT…V

Linear motor drive

Linear

- Pursuing ultimate compactification
- Very low profile of NT38V: only 11mm
- A wide variety of selections support optimal choice according to your use.
- High acceleration / deceleration ensuring highly responsive positioning
- Two-axis combination of X and Y

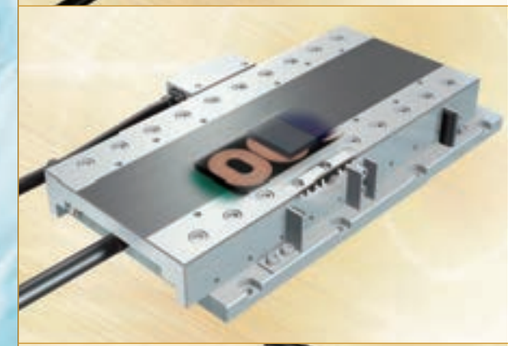

High Accuracy Type

NT…H

Linear motor drive

Linear

- Pursuing ultimate compactification
- High attitude accuracy
- High speed stability
- Simple system configuration

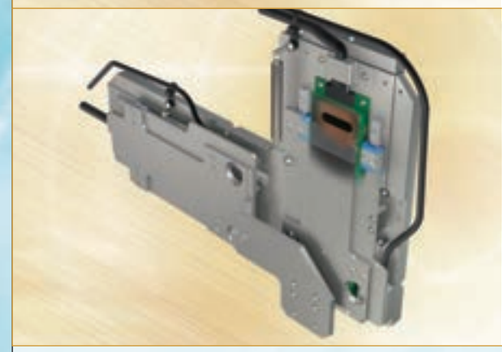

Pick and Place Unit

NT…XZ
NT…XZH

Linear motor drive

Linear

- Pursuing ultimate compactification
- High-tact positioning
- Ultrathin and space saving
- Operation monitoring function

Specification

Model and size	Maximum stroke (mm)	Maximum speed (mm/s)	Resolution (μm)
NT38V	18	500	0.1, 0.5
NT55V	65	1 300	0.1, 0.5
NT80V	120	1 300	0.1, 0.5
NT88H	65	400	0.01, 0.05
NT80XZ	45	1 300	0.1, 0.5
NT90XZH	25	1 300	0.1, 0.5

Accuracy

Item	NT…V	NT…H	NT…XZ
Positioning repeatability	◎	◎	◎
Positioning accuracy	—	◎	—
Lost motion	—	—	—
Parallelism in table motion A	—	◎	—
Parallelism in table motion B	—	—	—
Attitude accuracy	—	◎	—
Straightness	—	◎	—
Backlash	—	—	—

See page Ⅱ–236

1N=0.102kgf=0.2248lbs.
1mm=0.03937inch

A Variety of Models and Variations



Alignment Stage SA

Linear motor drive

SA···DE

Linear Alignment

- Slim and compact design with sectional height of 3 axes, X, Y and θ being only 52mm (SA65DE)
- X- and Y-axis: 0.1μm, θ-axis: excellent resolution as high as 0.36 sec (SA120DE)
- Free and independent combination of X, Y and θ

Specification

Model and size	Maximum stroke Maximum operating angle	Maximum speed	Resolution
SA 65 DE/X	10 (mm)	500 (mm/s)	0.1, 0.5 (μm)
SA120 DE/X	20 (mm)	800 (mm/s)	0.1, 0.5 (μm)
SA 65 DE/S	50 (degree)	720 (degree/s)	0.64 (s)
SA120 DE/S	60 (degree)	420 (degree/s)	0.36 (s)
SA200 DE/S	280 (degree)	270 (degree/s)	0.25 (s)

Accuracy

Positioning repeatability	◎
Positioning accuracy	—
Lost motion	—
Parallelism in table motion A	—
Parallelism in table motion B	—
Attitude accuracy	—
Straightness	—
Backlash	—

See page Ⅱ–266



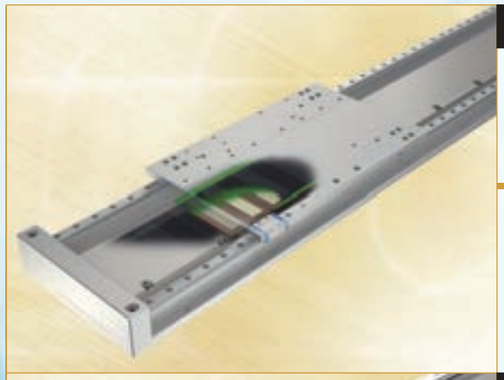

Linear Motor Table LT

Compact Type

Linear motor drive

LT···CE

Linear

- Compact
- High static stability
- High speed stability
- High acceleration / deceleration and high response
- Long term maintenance free specification with C-Lube built in

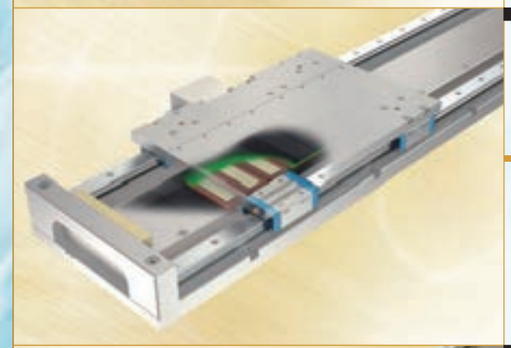

Long Stroke Type

Linear motor drive

LT···LD

Linear

- Super long stroke
- High static stability
- High speed stability
- Both high speed and high resolution are achieved.
- Long term maintenance free specification with C-Lube built in

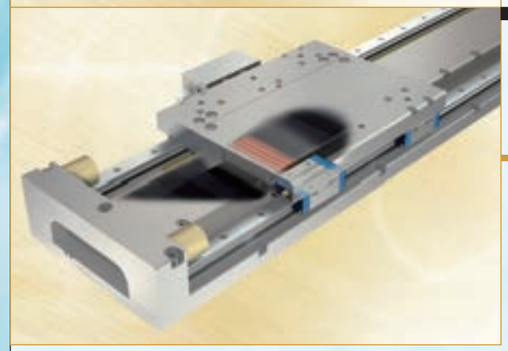

High Thrust Type

Linear motor drive

LT···H

Linear

- High thrust
- High acceleration / deceleration, high response and smooth operations
- High static stability
- Air-cooling capable
- Long term maintenance free specification with C-Lube built in

Specification

Model and size	Maximum stroke (mm)	Maximum speed (mm/s)	Resolution (μm)
LT100CE	1 000	2 000	0.1, 0.5, 1.0
LT150CE	1 200	2 000	0.1, 0.5, 1.0
LT130LD	2 760	3 000	0.1, 0.5, 1.0
LT170LD	2 720	3 000	0.1, 0.5, 1.0
LT170H	2 670	1 500	0.1, 0.5, 1.0

Accuracy

Item	LT···CE	LT···LD	LT···H
Positioning repeatability	◎	◎	◎
Positioning accuracy	—	—	—
Lost motion	—	—	—
Parallelism in table motion A	—	—	—
Parallelism in table motion B	—	—	—
Attitude accuracy	—	—	—
Straightness	—	—	—
Backlash	—	—	—

See page Ⅱ–282

1N=0.102kgf=0.2248lbs.
1mm=0.03937inch

A Variety of Models and Variations

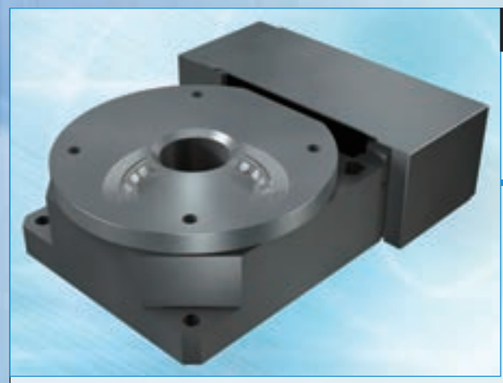

Alignment Table AT

Ball screw drive

AT

Alignment

- High accuracy positioning ensuring precise angle correction
- Crossed Roller Bearing ensures high rigidity and compactness.
- High positioning repeatability
- A series of 3 sizes

Specification

Model and size	Maximum operating angle (degree)	Ball screw lead (mm)	Rotator resolution (μm)
AT120	± 5	1	1
AT200	± 5	1	1
AT300	±10	2	2

Accuracy

Positioning repeatability	◎
Positioning accuracy	—
Lost motion	—
Parallelism in table motion A	—
Parallelism in table motion B	—
Attitude accuracy	—
Straightness	—
Backlash	—

See page Ⅱ–310

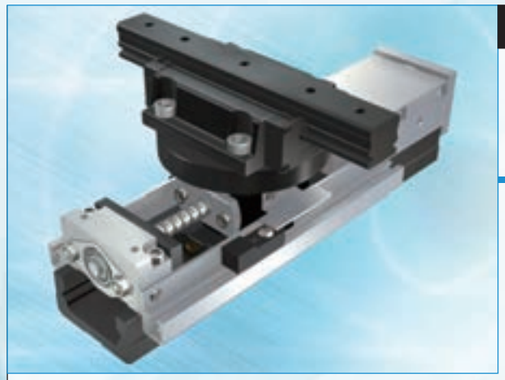

Alignment Module AM

Ball screw drive

AM

Alignment

- Supports free designing of stage according to your use
- Control tolerance of height within ±10μm
- Variety of positioning operations in combination of X, Y, and θ
- Ideal for large size equipment
- High accuracy, high rigidity, and high reliability

Specification

Model and size	Maximum stroke (mm)	Length of track rail (mm)	Ball screw lead (mm)
AM25	30	130	4
AM40	30	180	4
AM60	90	290	5
AM86	120	390	5

Accuracy

Positioning repeatability	○
Positioning accuracy	○
Lost motion	—
Parallelism in table motion A	—
Parallelism in table motion B	○
Attitude accuracy	—
Straightness	—
Backlash	○

See page Ⅱ–330

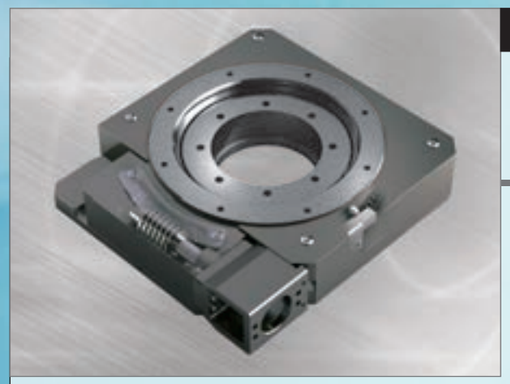

Rotation Stage SK

Worm gear drive

SK···W

Rotation

- Crossed Roller Bearings ensure high rigidity and compactness
- Allows smooth, high-accuracy positioning
- Direct mounting of the table or test object reduces labor hours required for design work

Specification

Model and size	Table diameter (mm)	Operating angle range (degree)	Maximum number of table revolutions (min^{-1})
SK120W	115	360	5
SK120W/SC	120	320	

Accuracy

Positioning repeatability	○
Positioning accuracy	◎
Lost motion	△
Parallelism in table motion A	—
Parallelism in table motion B	—
Attitude accuracy	—
Straightness	—
Backlash	△

See page Ⅱ–322



Precision Elevating Table TZ

Ball screw drive

TZ

Linear

- Unique wedge mechanism ensures compact and high accuracy vertical positioning.
- TZ···X achieving high accuracy and high rigidity through adoption of C-Lube Linear Roller Way Super MX
- Linear encoder mountable
- Long term maintenance free with C-Lube built in
- A series of two types of reduction ratios

Specification

Model and size	Maximum stroke (mm)	Maximum speed (mm/s)	Ball screw lead (mm)
TZ120X	10	100	4
TZ200H	24	125	5
TZ200X	24	125	5

Accuracy

Positioning repeatability	○
Positioning accuracy	○
Lost motion	○
Parallelism in table motion A	—
Parallelism in table motion B	—
Attitude accuracy	○
Straightness	—
Backlash	—

See page Ⅱ–344

1N=0.102kgf=0.2248lbs.
1mm=0.03937inch

For light weight and low profile innovative tables

Precision Positioning Table TE

TE···B



High-strength aluminum alloy is used for main components. Light weight and compact structure with slide table assembled inside the U-shaped bed!

● Mass

unit: kg

Bed width(mm)	TU	TE···B
50	1.8	0.52
60	3.3	1.0
86	10.9	3.7

The value shows the mass of the entire table with 1 standard table.

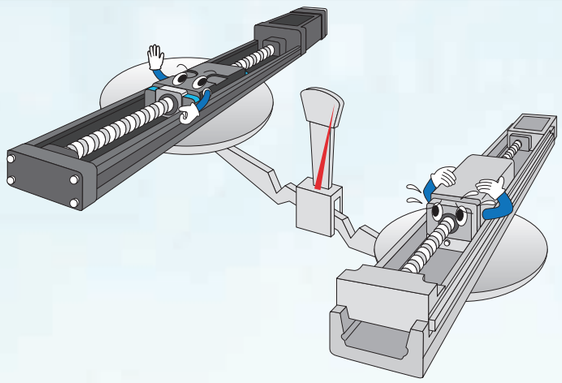

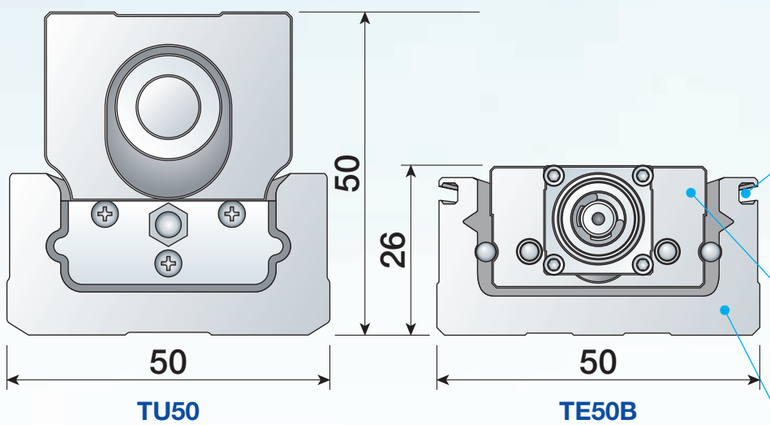

Respective sensors to be attached directly into the mounting groove

Slide table and linear motion rolling guide integrated in a single structure to ensure low profile and compact design!

Ultra light weight achieved through the use of slide table and bed made of high-strength aluminum alloy!

For ultimate compactification

Micro Precision Positioning Table TM

TM



Ground ball screw specification realizes ultra-small size with sectional height of 20mm and width of 17mm.

Micro Linear Way L with track rail width of 2mm is adopted in the table guiding parts, and miniature ball screw with screw diameter of 2mm is used in the feeding mechanism. The unparalleled low cross sectional height in the ground ball screw drive is achieved.

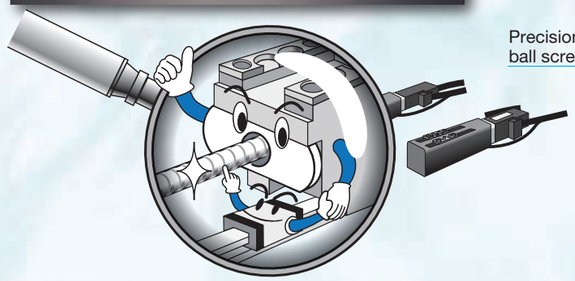

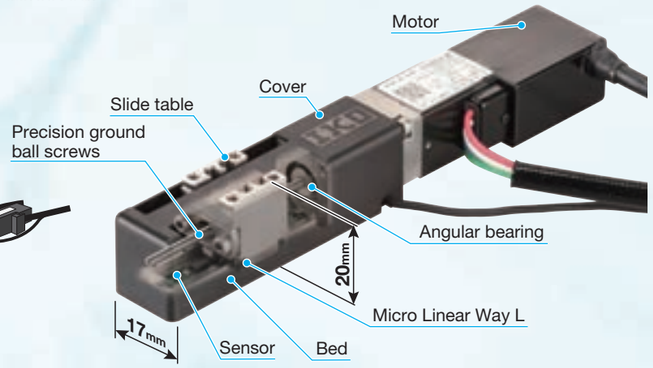

Nano Linear NT

NT···V



Pursuing ultimate compactification NT38V10, the smallest in the series, is only 11mm in sectional height, 38mm in table width and 62mm in entire length.

The occupied space is not increased even when tables are layered in X and Y, so further miniaturization of the positioning mechanism is promoted.

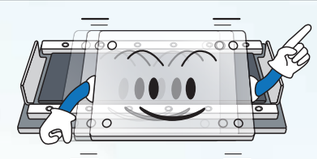

Model	NT···V						
	NT38V10	NT38V18	NT55V25	NT55V65	NT80V25	NT80V65	NT80V120
Model and size							
Sectional dimension	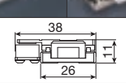		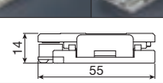		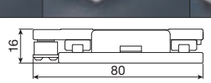		

1N=0.102kgf=0.2248lbs.
1mm=0.03937inch

For higher accuracy

Super Precision Positioning Table TX

TX···M, CTX···M



Super high positioning accuracy and resolution guaranteed with an onboard super high accuracy linear encoder!

Adoption of C-Lube Linear Roller Way Super MX ensures ultimate running performance. Fully-closed loop control is established by super high resolution linear encoder to ensure high positioning accuracy over the whole stroke length.

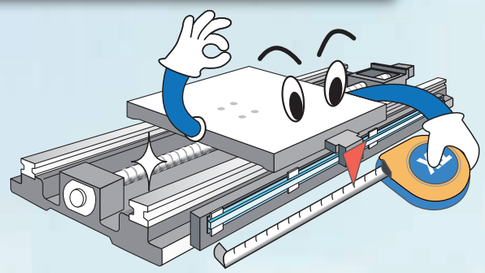

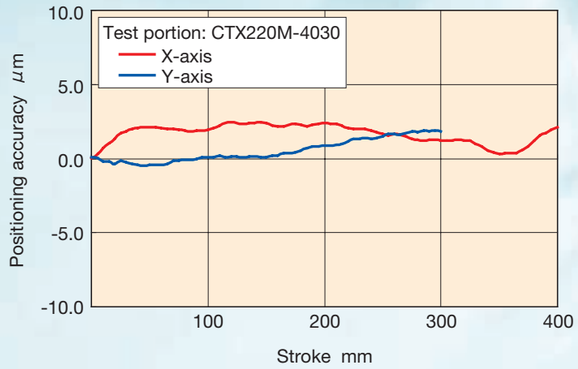

Nano Linear NT

NT···H



High attitude accuracy is realized!

Combination of parts processed with high accuracy and Anti-Creep Cage Crossed Roller Way realizes attitude accuracy of 5 sec or less. Variations in attitude due to movement is minimized, which ensures high positioning repeatability.

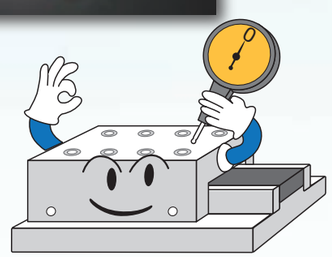

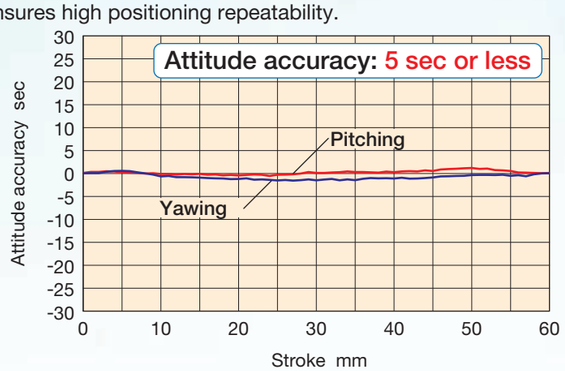

For attaining both high accuracy positioning and high speed

Linear Motor Table LT

LT···LD



Direct drive enables both high-precision positioning and high speed.

Supports high speed operation required for long stroke motion
It is possible to perform high-speed motion of up to 3,000mm/s.

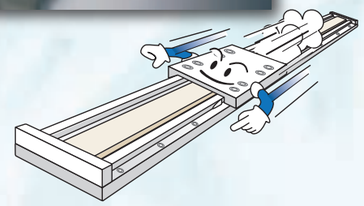

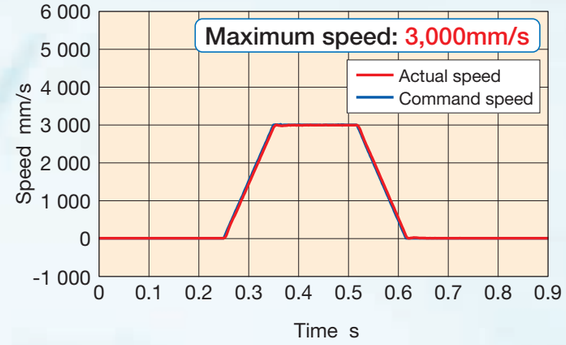

For high speed stability

Linear Motor Table LT

LT···CE, LT···LD, LT···H



Direct drive and advanced servo technology has achieved high speed stability.



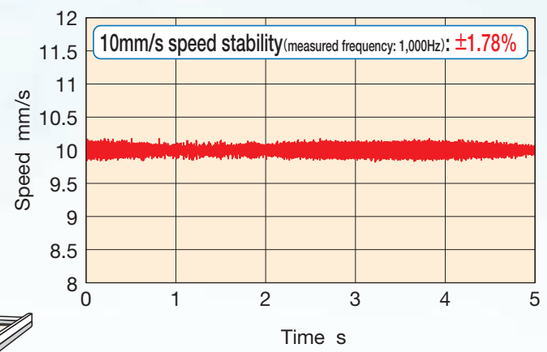

1N=0.102kgf=0.2248lbs.
1mm=0.03937inch

For choosing from a wide variety of options

Easy ordering is possible right now just by specifying the identification number for the required functions and performance!

Precision Positioning Table TU

TU

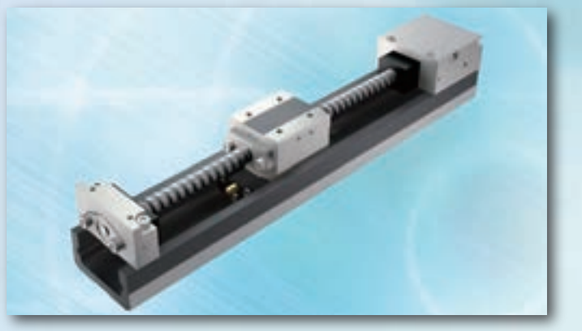

Precision Positioning Table TE

TE···B



Shape of slide table

Two types of shape are available according to needs.

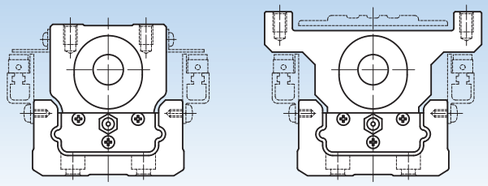

Standard
Short, standard, long

With flange
Short, standard, long

Motor folding back specification

Shortening the overall length of the table will contribute to space-saving.

With bridge cover

A specification with bridge cover is available for preventing foreign matter from falling onto the table.

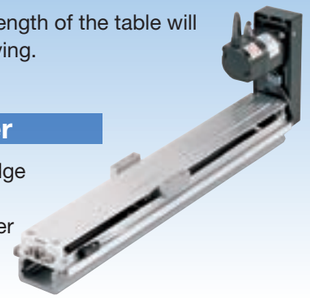

Number of slide tables

Two slide tables can be mounted on the track rail depending on the applied load and the moment.

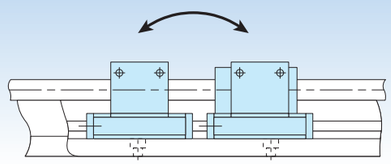

Table with bellows

A specification with bellows is available for preventing foreign matter from intruding into the inside of the table.



Type and lead of ball screw

Rolled ball screw or ground ball screw can be selected according to the required accuracy. Ball screw lead is also selectable.

Black chrome surface treatment

Black permeable film is applied on the surface of slide table and ball screw to improve corrosion resistance.

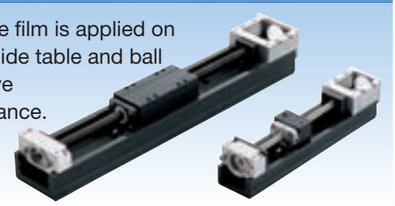

For clean environment applications

Cleanroom Precision Positioning Table TC

TC···EB



Cleanliness class 3 is achieved!

Stainless sheet with excellent corrosion resistance and side cover seal up drive parts and slide table guiding parts. Stainless sheet is pressed onto the side cover by resin roller within the slide table. The structure which ensures proper attraction by the strong magnet sheet prevents dust from generating to the surrounding of the table by air suction from the sealed internal space.

TC50EB150
(Ball screw lead: 4mm)
Stroke length : 50mm
Speed : 200mm/s
Suction amount : 5L/min

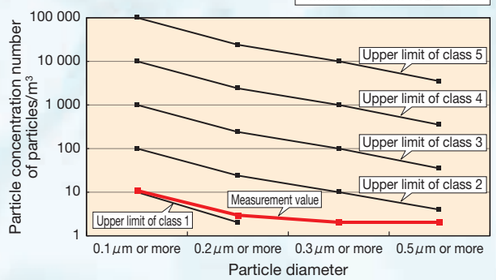

TC50EB300
(Ball screw lead: 8mm)
Stroke length : 200mm
Speed : 400mm/s
Suction amount : 10L/min

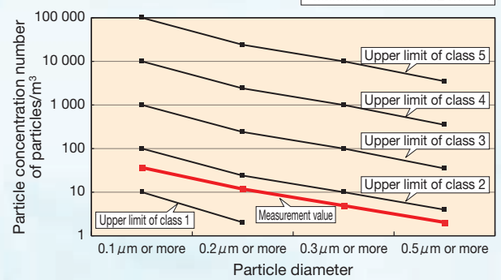

TC60EB300
(Ball screw lead: 10mm)
Stroke length : 200mm
Speed : 500mm/s
Suction amount : 30L/min

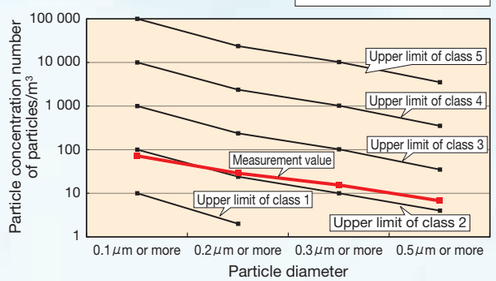

TC60EB600
(Ball screw lead: 10mm)
Stroke length : 500mm
Speed : 500mm/s
Suction amount : 30L/min

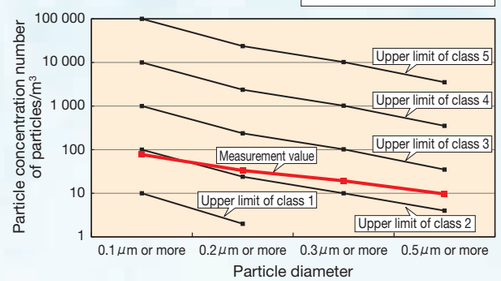

TC86EB640
(Ball screw lead: 20mm)
Stroke length : 200mm
Speed : 1 000mm/s
Suction amount : 70L/min

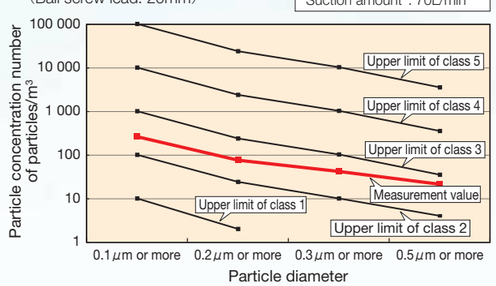

TC86EB940
(Ball screw lead: 20mm)
Stroke length : 800mm
Speed : 560mm/s
Suction amount : 40L/min

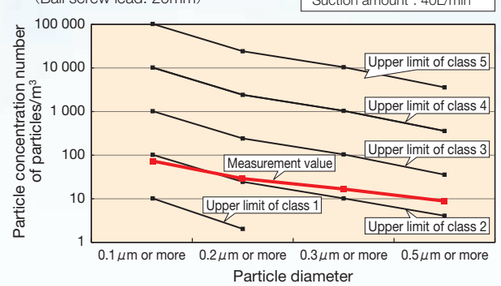

1N=0.102kgf=0.2248lbs.
1mm=0.03937inch

For maintenance free

Oil Minimum
Gentle to The Earth IKO

Original and world's first structure with 【C-Lube】

C-Lube integrated

Lubrication oil is carried through circulation of rolling elements

The lubrication oil is supplied directly to the rolling elements, not to the track rail.
When rolling elements make contact with the capillary lubricating element integrated with the circulation path of slide unit rolling elements, the lubrication oil is supplied to surfaces of rolling elements and carried to the loading area through circulation of rolling elements.
This results in adequate lubrication oil being properly maintained in the loading area and lubrication performance will last for a long time.

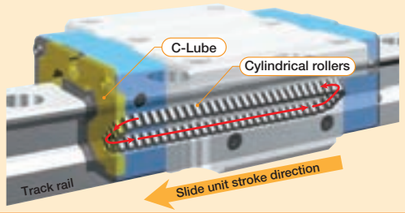

Lubrication oil is directly supplied to surfaces of the rolling elements

The surface of capillary lubricating element is always covered with the lubrication oil.
Lubrication oil is continuously supplied to the surface of rolling elements by surface tension in the contact of capillary lubricating element surface and rolling elements.
On the surface of capillary lubricating element with which the rolling elements make contact, new lubrication oil is always supplied from the other sections.

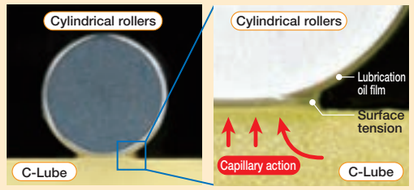

C-Lube Linear Way

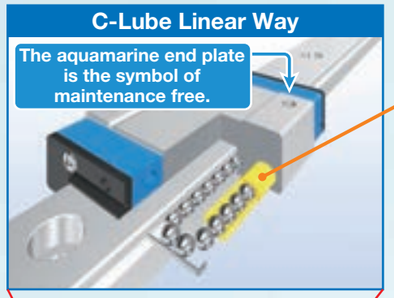

C-Lube Linear Roller Way

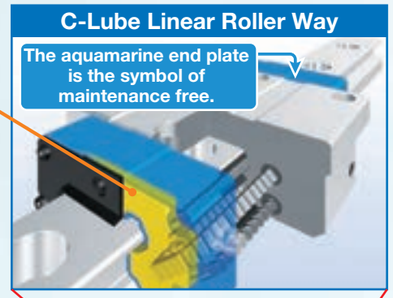

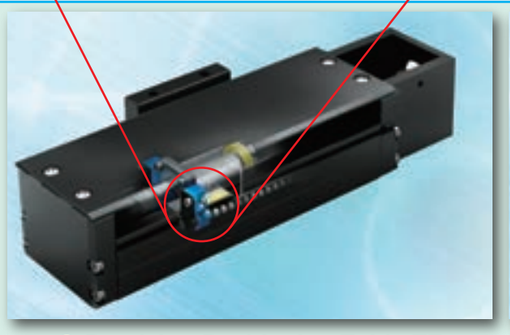

- Precision Positioning Table TE
- Precision Positioning Table L
- Precision Positioning Table LH
- Cleanroom Precision Positioning Table TC
- Precision Elevating Table TZ

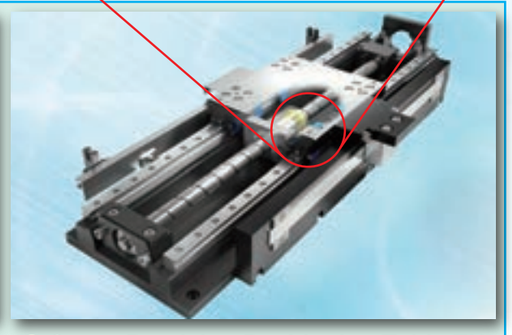

- Super Precision Positioning Table TX
- Nano Linear NT
- Alignment Stage SA
- Linear Motor Table LT

Series with 【C-Lube】 built in

For a wider variety of needs

Extensive experience in special stages will help us precisely address your particular needs such as stages related to various axis configurations. If needed, please contact IKO.

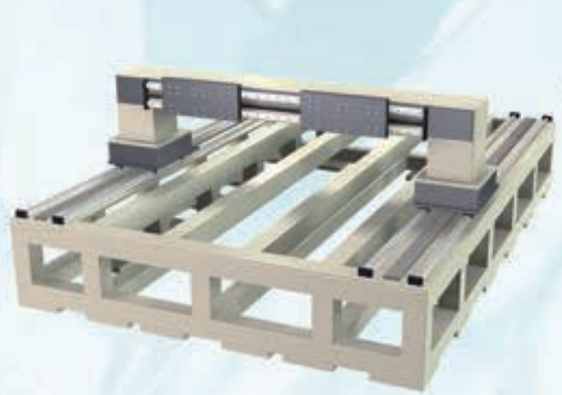

▲ Liquid crystal substrate manufacturing equipment

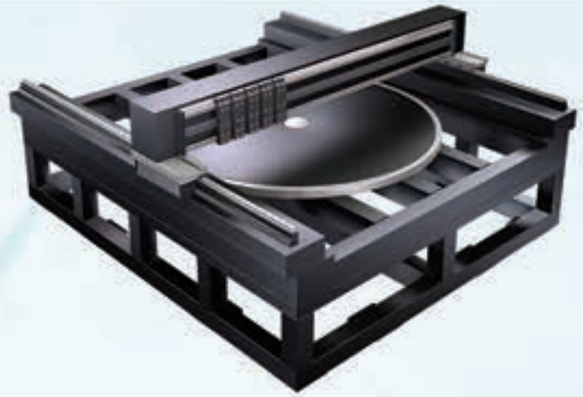

▲ Liquid crystal substrate manufacturing equipment



▲ Electronic parts inspection equipment



▲ Liquid crystal substrate inspection equipment

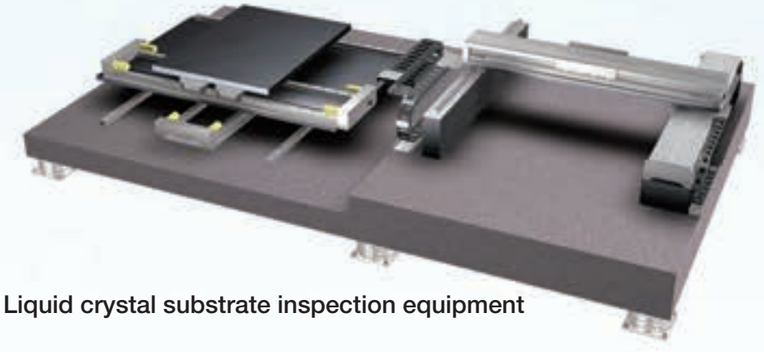

▲ Liquid crystal substrate inspection equipment

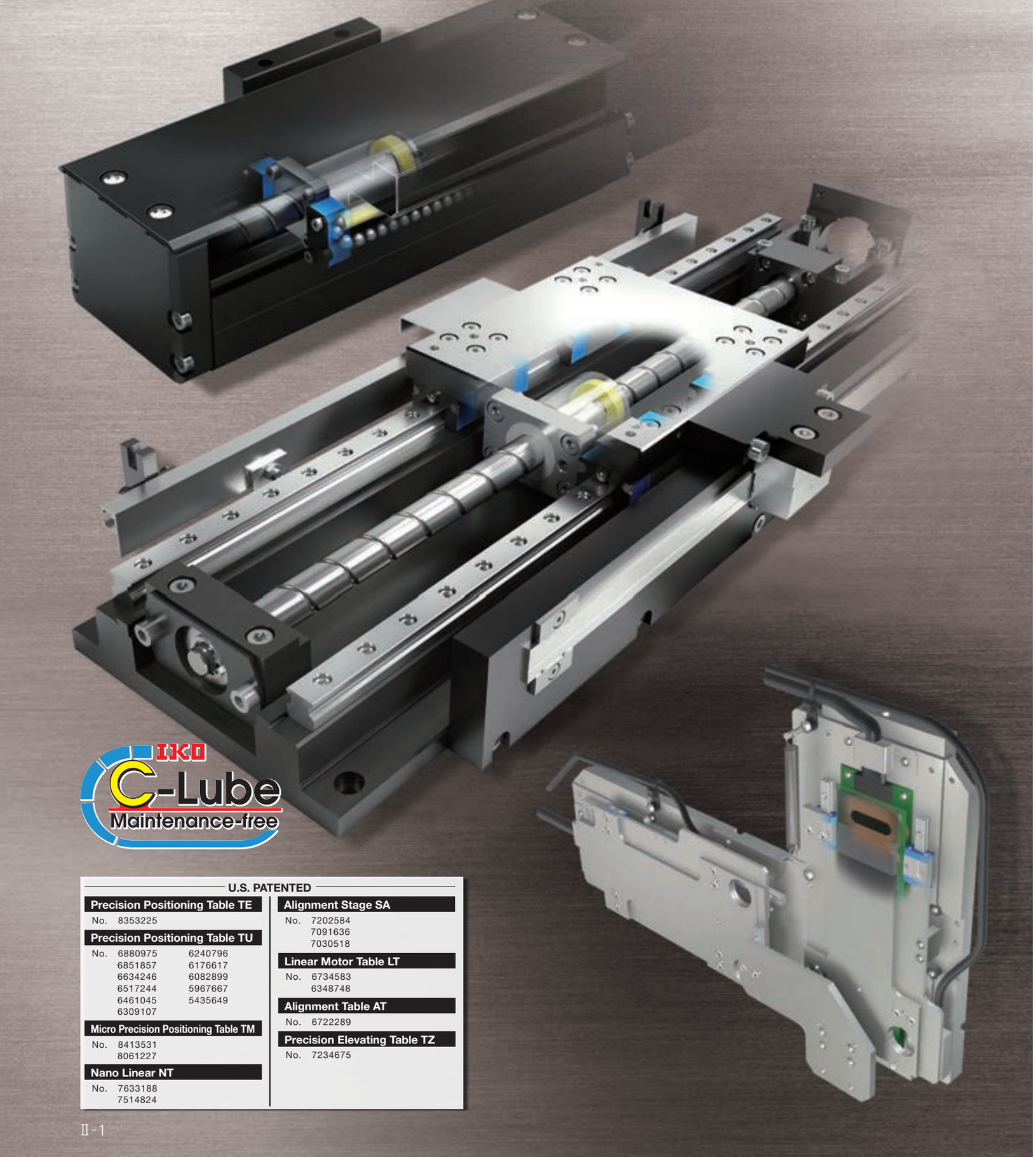

IKO C-Lube Maintenance-free

U.S. PATENTED

Precision Positioning Table TE
No. 8353225

Precision Positioning Table TU
No. 6880975 6240796
6851857 6176617
6634246 6082899
6517244 5967667
6461045 5435649
6309107

Micro Precision Positioning Table TM
No. 8413531
8061227

Nano Linear NT
No. 7633188
7514824

Alignment Stage SA
No. 7202584
7091636
7030518

Linear Motor Table LT
No. 6734583
6348748

Alignment Table AT
No. 6722289

Precision Elevating Table TZ
No. 7234675

Explanation and Dimension Table for Respective Product Series

- Precision Positioning Table TE — Explanation…Ⅱ- 5 — Dimension Table…Ⅱ- 19
- Precision Positioning Table TU — Explanation…Ⅱ- 33 — Dimension Table…Ⅱ- 69
- Precision Positioning Table L — Explanation…Ⅱ-103 — Dimension Table…Ⅱ-116
- Precision Positioning Table LH — Explanation…Ⅱ-123 — Dimension Table…Ⅱ-137
- Super Precision Positioning Table TX — Explanation…Ⅱ-151 — Dimension Table…Ⅱ-163
- Cleanroom Precision Positioning Table TC — Explanation…Ⅱ-171 — Dimension Table…Ⅱ-182
- Micro Precision Positioning Table TM — Explanation…Ⅱ-187 — Dimension Table…Ⅱ-199
- Precision Positioning Table TS/CT — Explanation…Ⅱ-203 — Dimension Table…Ⅱ-214
- Precision Positioning Table LB — Explanation…Ⅱ-225 — Dimension Table…Ⅱ-232
- Nano Linear NT — Explanation…Ⅱ-237 — Dimension Table…Ⅱ-260
- Alignment Stage SA — Explanation…Ⅱ-267 — Dimension Table…Ⅱ-276
- Linear Motor Table LT — Explanation…Ⅱ-283 — Dimension Table…Ⅱ-298
- Alignment Table AT — Explanation…Ⅱ-311 — Dimension Table…Ⅱ-318
- Rotation Stage SK — Explanation…Ⅱ-323 — Dimension Table…Ⅱ-328
- Alignment Module AM — Explanation…Ⅱ-331 — Dimension Table…Ⅱ-339
- Precision Elevating Table TZ — Explanation…Ⅱ-345 — Dimension Table…Ⅱ-353
- Driver Specification for Linear Motor Drive Tables — Explanation…Ⅱ-358

General Explanation

- General Explanation …… Ⅲ-2

TE…B

TE···B

Ball screw
Linear

IKO C-Lube Maintenance-free

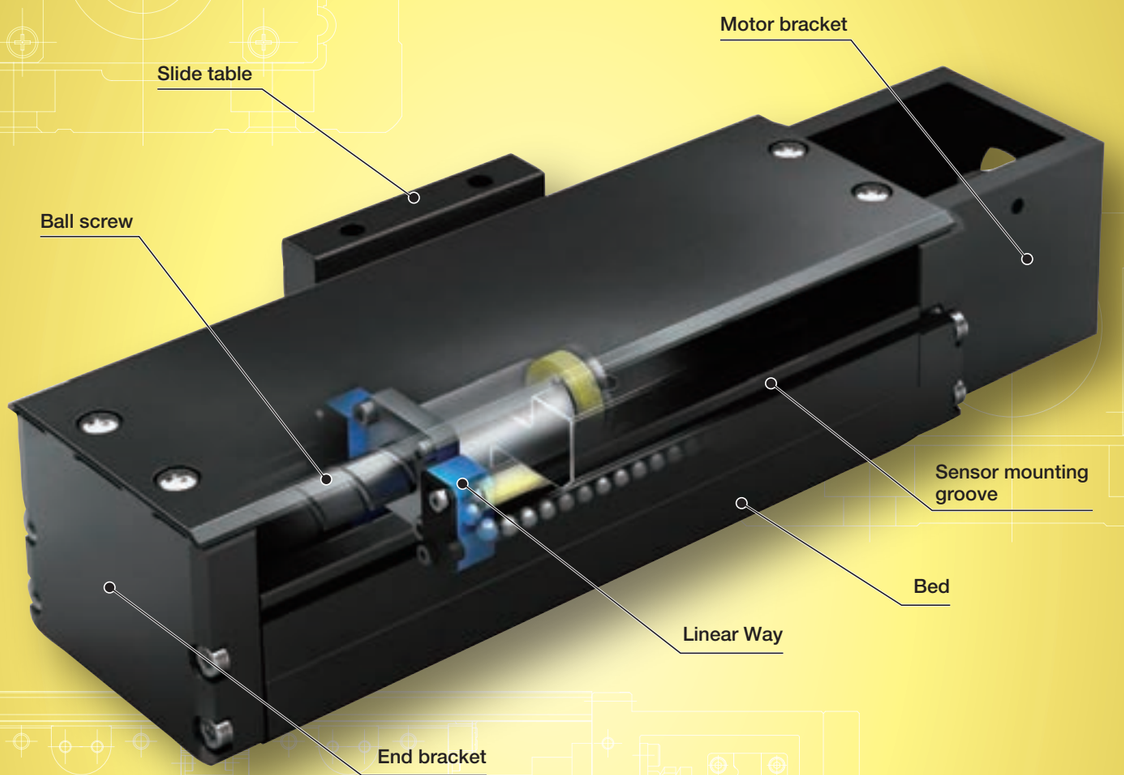

Major product specifications

Driving method	Precision ball screw
Linear motion rolling guide	Linear Way（ball type）
Built-in lubrication part	Lubrication part "C-Lube" is built-in
Material of table and bed	High-strength aluminum alloy
Sensor	Select by identification number

Accuracy

unit: mm

Positioning repeatability	±0.002～0.020
Positioning accuracy	0.035～0.065
Lost motion	–
Parallelism in table motion A	–
Parallelism in table motion B	0.008～0.016
Attitude accuracy	–
Straightness	–
Backlash	0.005

Points

● Light weight, low profile and high-precision positioning table

1 Light weight, low profile and compact positioning table using high-strength aluminum alloy for its main components with a slide table assembled inside a U-shaped bed.
The mass of the entire table is reduced to about 40% of TU series. Low cross sectional height (26mm for TE50B, 33mm for TE60B, and 46mm for TE86B). Moreover, the structure of various sensors directly installable on sensor mounting groove of the bed contributes to the miniaturization.

● Table specification is selectable according to your use

2 There are two types in the shape of slide table: standard and with flange. The number of slide tables, motor folding back specification, ball screw lead, with or without a dust protection cover, installation of various sensors can be selected, you can select an optimal product for the specifications of your machine and device.

● Excellent cost performance

3 The excellent cost performance is realized by reducing the number of parts, and optimizing the part shapes.

Comparison with Precision Positioning Table TU

● Sectional height

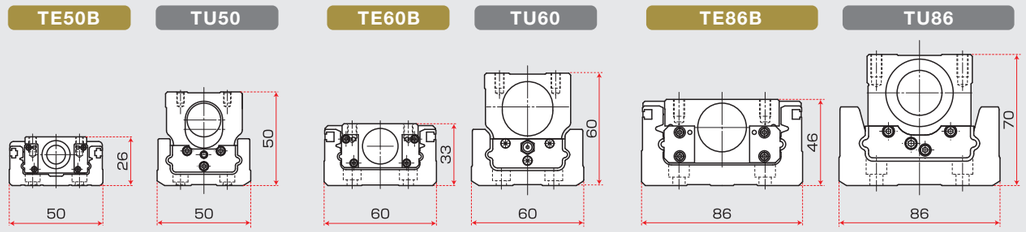

● Mass

Model and size	Stroke length(mm)	Overall length(mm)	Mass(kg)	Mass / 100mm(kg)
TE50B	60	218	0.52	0.24
TU50	60	226	1.8	0.80
TE60B	100	269	1.0	0.37
TU60	100	298	3.3	1.11
TE86B	300	523	3.7	0.71
TU86	250	498	10.9	2.19

Variation

Shape	Model	Bed width（mm）		
		50	60	86
Standard 	TE···BS	☆	☆	☆
With flange 	TE···BF	☆	☆	☆

1N=0.102kgf=0.2248lbs.
1mm=0.03937inch

Identification Number

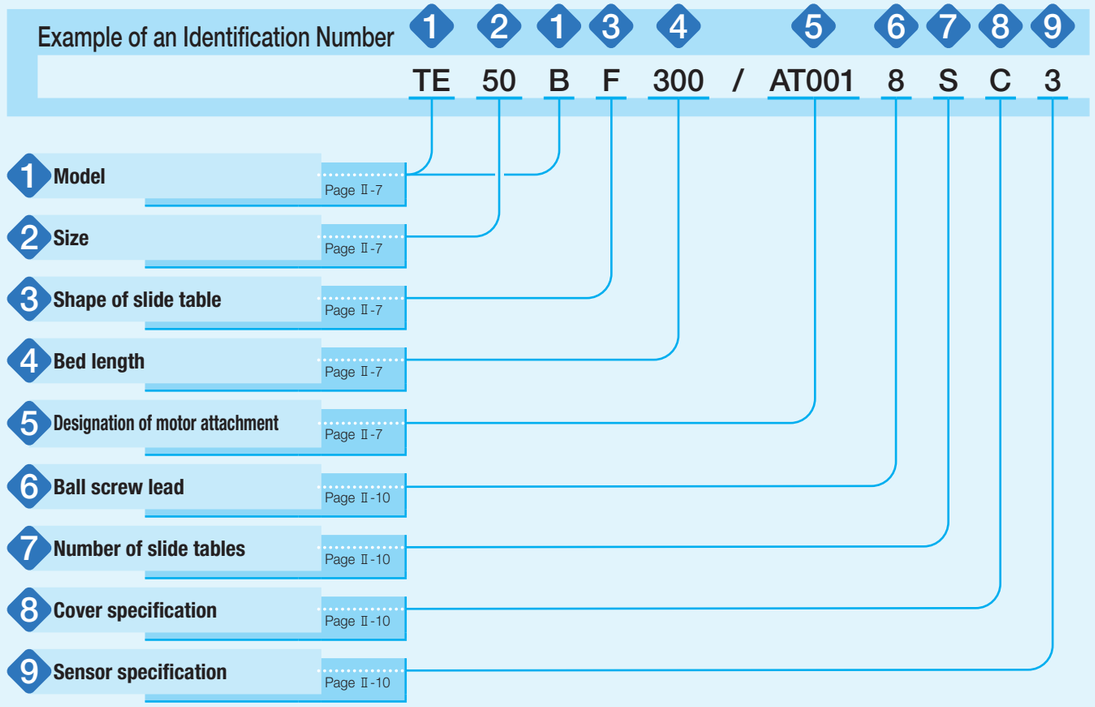

Identification Number and Specification

1 Model

TE···B: Precision Positioning Table TE

2 Size

Size indicates bed width.
Select a size from the list of Table 1.

3 Shape of slide table

S: Standard table
F: Flange type standard table

4 Bed length

Select a bed length from the list of Table 1.

Table 1 Sizes and bed lengths unit: mm

Model and size	Bed width	Bed length
TE50B	50	150, 200, 250, 300, 400, 500
TE60B	60	150, 200, 300, 400, 500, 600, 700
TE86B	86	340, 440, 540, 640, 740, 840, 940

Remark: For stroke length, please see the dimension tables shown in pages of Ⅱ-19 or later.

5 Designation of motor attachment

AT000 : Motor inline specification Without motor attachment
AT001 to AT011 : Motor inline specification With motor attachment
AR000 : Motor folding back specification Without motor attachment
AR001 to AR008 : Motor folding back specification With motor attachment
To specify the motor attachment, select it from the list of Table 2.1 and Table 2.2.

- Please specify motor folding back specification and motor attachment applicable to motor for use.
- If motor inline specification with motor attachment is specified, the main body is shipped with a coupling indicated in the Table 3 mounted. However, the final position adjustment should be made by customer since it is only temporarily fixed. For a product without motor attachment (AT000), no coupling is attached.
- If motor folding back specification with motor attachment is specified, "housing applicable to the specified motor, pulley (on motor side and ball screw side), cover, motor bracket, belt and bolts necessary for assembly" are supplied. Motor mounting bolts should be prepared by customer.

Identification Number and Specification

Table 2.1 Application of motor attachment (motor inline specification)

Motor to be used					Flange size mm	Motor attachment		
Type	Manufacturer	Series	Model	Rated output W		TE50B	TE60B	TE86B
AC servo motor	YASKAWA ELECTRIC CORPORATION	Σ-V	SGMJV-A5A	50	□40	AT001	AT002	–
			SGMAV-A5A			AT001	AT002	–
			SGMJV-01A	100		–	AT002	–
			SGMAV-01A			–	AT002	–
			SGMJV-02A	200	□60	–	–	AT003
			SGMAV-02A			–	–	AT003
	Mitsubishi Electric Corporation	J4	HG-MR053	50	□40	AT001	AT002	–
			HG-KR053			AT001	AT002	–
			HG-MR13	100		–	AT002	–
			HG-KR13			–	AT002	–
			HG-MR23	200	□60	–	–	AT003
			HG-KR23			–	–	AT003
	Panasonic Corporation	MINAS A5	MSMD5A	50	□38	AT004	AT005	–
			MSME5A			AT004	AT005	–
			MSMD01	100		–	AT005	–
			MSME01			–	AT005	–
			MSMD02	200	□60	–	–	AT006
			MSME02			–	–	AT006
	Hitachi Industrial Equipment Systems Co., Ltd	AD	ADMA-R5L	50	□40	AT001	AT002	–
			ADMA-01L	100		–	AT002	–
			ADMA-02L	200	□60	–	–	AT003
Stepper motor	ORIENTAL MOTOR Co., Ltd.	α step	ARM46		□42	AT007	–	–
			ARM66		□60	–	–	AT008
			ARM69		□60	–	–	AT008
		CRK	CRK54		□42	AT009	–	–
			CRK56 (1)		□60	–	AT010	AT011

Note (1) Applicable to the outer diameter φ8 of motor output shaft.
Remark: For detailed motor specifications, please see respective motor manufacturer's catalog.

Table 2.2 Application of NEMA motor attachment (motor inline specification)

Motor to be used					Flange size inch	Motor attachment		
Type	Manufacturer	Series	Model	Rated output W		TE50B	TE60B	TE86B
AC servo motor	Allen-Bradley	TLY(metric)	TLY-A110(AA type)	41	□40	AT001	AT002	–
			TLY-A120(AA type)	86	□40	AT001	AT002	–
			TLY-A130(AA type)	140	□40	AT001	AT002	–
			TLY-A220(AA type)	350	□60	–	–	AT003 (3)
			TLY-A230(AA type)	440	□60	–	–	AT003 (3)
		TLY(NEMA)	TLY-A120(AN type)	86	□42	TAE9043-ATE137 (1)	–	–
			TLY-A130(AN type)	140	□42	TAE9043-ATE137 (1)	–	–
			TLY-A220(AN type)	350	□56.4	–	–	TAE9017-ATE135 (1)
			TLY-A230(AN type)	440	□56.4	–	–	TAE9017-ATE135 (1)
			TLY-A2530(AN type)	690	□86	–	–	TAE9056-ATE134 (1)
			TLY-A2540(AN type)	860	□86	–	–	TAE9056-ATE134 (1)
Servo or Stepper	NEMA17C					TAE9043-ATE110 (1)(2)	–	–
	NEMA23D					TAE9017-ATE096 (1) (2)	TAE9017-ATE096 (1)(2)	–
							TAE9017-ATE097 (1)(2)	–
	NEMA34D					–	–	TAE9056-ATE095 (1)(2)

Note (1) The TAE part numbers are the part number of motor attachment component sold separately. In the TE part number, please choose motor attachment code AT000. No Coupling is included. It is required to consider customer's operation patterns for these motor attachment.
(2) Please confirm the length and the diameter of the motor shaft etc., and check the usability of the motor attachment with your motor beforehand.
(3) It is required to change the delivered coupling to XGS-30C-8×12 which is for the 12mm motor shaft by customer.
Remark: For detailed motor specifications, please see respective motor manufacturer's catalog.

1N=0.102kgf=0.2248lbs.
1mm=0.03937inch

Table 2.3 Application of motor attachment (motor folding back specification)

Motor to be used					Flange size mm	Motor attachment		
Type	Manufacturer	Series	Model	Rated output W		TE50B	TE60B	TE86B
AC servo motor	YASKAWA ELECTRIC CORPORATION	Σ-V	SGMJV-A5A	50	□40	AR001	AR002	–
			SGMAV-A5A			AR001	AR002	–
			SGMJV-01A	100		–	AR002	–
			SGMAV-01A			–	AR002	–
			SGMJV-02A	200	□60	–	–	AR003
			SGMAV-02A			–	–	AR003
	Mitsubishi Electric Corporation	J4	HG-MR053	50	□40	AR001	AR002	–
			HG-KR053			AR001	AR002	–
			HG-MR13	100		–	AR002	–
			HG-KR13			–	AR002	–
			HG-MR23	200	□60	–	–	AR003
			HG-KR23			–	–	AR003
	Panasonic Corporation	MINAS A5	MSMD5A	50	□38	AR004	AR005	–
			MSME5A			AR004	AR005	–
			MSMD01	100		–	AR005	–
			MSME01			–	AR005	–
			MSMD02	200	□60	–	–	AR006
			MSME02			–	–	AR006
	Hitachi Industrial Equipment Systems Co., Ltd	AD	ADMA-R5L	50	□40	AR001	AR002	–
			ADMA-01L	100		–	AR002	–
			ADMA-02L	200	□60	–	–	AR003
Stepper motor	ORIENTAL MOTOR Co., Ltd.	α step	ARM46		□42	AR007	–	–
		CRK	CRK54		□42	AR008	–	–

Remark: For detailed motor specifications, please see respective motor manufacturer's catalog.

Table 3 Coupling models (motor inline specification)

Motor attachment	Coupling models	Manufacturer	Coupling inertia J_c $\times 10^{-5}$kg · m^2
AT001	XGS-19C- 5× 8	Nabeya Bi-tech Kaisha	0.062
AT002	XGS-19C- 5× 8	Nabeya Bi-tech Kaisha	0.062
AT003	XGS-30C- 8×14	Nabeya Bi-tech Kaisha	0.55
AT004	XGS-19C- 5× 8	Nabeya Bi-tech Kaisha	0.062
AT005	XGS-19C- 5× 8	Nabeya Bi-tech Kaisha	0.062
AT006	XGS-30C- 8×11	Nabeya Bi-tech Kaisha	0.55
AT007	XGS-19C- 5× 6	Nabeya Bi-tech Kaisha	0.062
AT008	XGS-30C- 8×10	Nabeya Bi-tech Kaisha	0.55
AT009	XGS-19C- 5× 5	Nabeya Bi-tech Kaisha	0.062
AT010	XGS-19C- 5× 8	Nabeya Bi-tech Kaisha	0.062
AT011	XGS-30C- 8× 8	Nabeya Bi-tech Kaisha	0.55
TAE9043-ATE137	XGS-19C- 5× 6.35	Nabeya Bi-tech Kaisha	0.062
TAE9017-ATE135	XGS-30C- 8×12.7	Nabeya Bi-tech Kaisha	0.55
TAE9056-ATE134	XGS-34C- 8×15.875	Nabeya Bi-tech Kaisha	1.0

Remark: For detailed coupling specification, please see the manufacturer's catalog.

6 Ball screw lead

Select from among ball screw leads applicable to the sizes and bed lengths shown in the table below.

Model and size	Bed length mm	Ball screw lead mm				
		4	5	8	10	20
TE50B	300 or less	○	–	○	–	–
	400 or more	–	–	○	–	–
TE60B	600 or less	–	○	–	○	–
	700	–	–	–	–	○
TE86B	All	–	–	–	○	○

7 Number of slide table

S: One unit
C: Two units

8 Cover specification

0: Without cover
C: With bridge cover (applied to TE···BF)

9 Specification of sensor

0: Without sensor
2: Two units of sensor mounted (limit)
3: Three units of sensor mounted (limit, pre-origin)
4: Four units of sensor mounted (limit, pre-origin, origin)
5: Two sensors attached (limit)
6: Three sensors attached (limit, pre-origin)
7: Four sensors attached (limit, pre-origin and origin sensors)

If sensor mounting (symbol 2, 3, or 4) is specified, the sensor is mounted into the mounting groove on the side of bed, and two detecting plates are attached onto the slide table.
If sensor attachment (symbol 5, 6, or 7) is specified, specified number of sensors are attached including mounting screws for sensors, nuts, two detecting plates, and mounting screws for the detecting plates.

1N=0.102kgf=0.2248lbs.
1mm=0.03937inch

Specifications

Table 4 Accuracy

unit: mm

Model and size	Bed length	Positioning repeatability	Positioning accuracy (1)	Parallelism in table motion B	Backlash (1)
TE50B	150	±0.002 (±0.020)	0.035	0.008	0.005
	200				
	250		0.040		
	300				
	400		0.045	0.010	
	500			0.012	
TE60B	150	±0.002 (±0.020)	0.035	0.008	0.005
	200				
	300		0.040		
	400		0.045		
	500			0.010	
	600		0.050		
	700		0.060	0.012	
TE86B	340	±0.002 (±0.020)	0.040	0.008	0.005
	440		0.045	0.010	
	540		0.050		
	640			0.012	
	740		0.055		
	840		0.065	0.014	
	940			0.016	

Note (1) This does not apply to table of motor folding back specification.
Remark: The values in ( ) are reference values provided that the timing belt tension is properly adjusted in motor folding back specification table.

Table 5 Maximum carrying mass

Model and size	Ball screw lead mm	Maximum carrying mass kg	
		Horizontal	Vertical
TE50B	4	12	11
	8	12	7
TE60B	5	17	13
	10	17	8
	20	17	7
TE86B	10	36	18
	20	29	10

Remark: The value is for one flange type standard table.

Table 6 Allowable moment

Model and size	Allowable moment (1) N · m		
	T_0	T_X	T_Y
TE50B	9.8 (19.6)	9.8 (48.4)	9.8 (48.4)
TE60B	16.7 (33.4)	16.7 (88.1)	16.7 (88.1)
TE86B	49.0 (98.0)	49.0 (247.0)	49.0 (247.0)

Note (1) The value in ( ) represents two slide tables in close contact.

■ Allowable moment

Allowable moment refers to the maximum static moment that can be used without affecting functions or performance. Therefore, do not exceed the allowable moment value during operation.

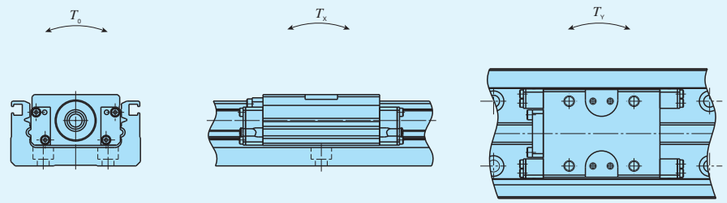

Table 7 Load rating of linear motion rolling guide

Model and size	Basic dynamic load rating C N	Basic static load rating C_0 N	Static moment rating (1) N · m		
			T_0	T_X	T_Y
TE50B	8 490	12 500	211 (422)	99.5 (508)	99.5 (508)
TE60B	12 400	17 100	354 (708)	151 (795)	151 (795)
TE86B	26 800	35 900	1 110 (2 220)	472 (2 400)	472 (2 400)

Note (1) In directions indicated in the above figures, the value in ( ) is for two slide tables in close contact.

Table 8 Maximum speed

Motor type	Model and size	Bed length mm	Maximum speed mm/s				
			Lead 4mm	Lead 5mm	Lead 8mm	Lead 10mm	Lead 20mm
AC servomotor	TE50B	300 or less	400	–	800	–	–
		400	–	–	800	–	–
		500	–	–	620	–	–
	TE60B	500 or less	–	500	–	1 000	–
		600	–	350	–	710	–
		700	–	–	–	–	960
	TE86B	540 or less	–	–	–	930	1 860
		640	–	–	–	830	1 630
		740	–	–	–	590	1 170
		840	–	–	–	440	880
		940	–	–	–	340	690
Stepper motor	TE50B	300 or less	120	–	240	–	–
		400	–	–	240	–	–
		500	–	–	240	–	–
	TE60B	600 or less	–	150	–	300	–
		700	–	–	–	–	600
	TE86B	940 or less	–	–	–	300	600

Remark: To measure the practical maximum speed, it is required to consider operation patterns based on the motor to be used and load conditions.

Table 9.1 Specifications of ball screw 1

Model and size	Lead mm	Shaft dia. mm	Basic dynamic load rating C N	Basic static load rating C_0 N
TE50B	4	8	2 290	3 575
	8		1 450	2 155
TE60B	5	10	2 730	4 410
	10		1 720	2 745
	20		1 636	2 790
TE86B	10	12	3 820	6 480
	20		2 300	3 920

Table 9.2 Specifications of ball screw 2

unit: mm

Model and size	Bed length	Shaft dia.	Overall length
TE50B	150	8	192.5
	200		242.5
	250		292.5
	300		342.5
	400		442.5
	500		542.5
TE60B	150	10	194
	200		244
	300		344
	400		444
	500		544
	600		644
	700		744
TE86B	340	12	395
	440		495
	540		595
	640		695
	740		795
	840		895
	940		995

1N=0.102kgf=0.2248lbs.
1mm=0.03937inch

Table 10 Moment of inertia of sectional area of bed

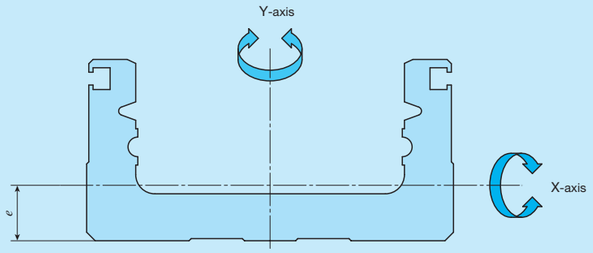

Model and size	Moment of inertia of sectional area mm⁴		Center of gravity e mm
	I_x	I_y	
TE50B	1.3×10⁴	1.2×10⁵	6.4
TE60B	4.7×10⁴	3.2×10⁵	8.8
TE86B	2.0×10⁵	1.3×10⁶	13.0

Table 11 Table inertia and starting torque

Model and size	Bed length mm	Table inertia J_T (2) ×10⁻⁵kg·m²										Starting torque T_S (1) N·m
		Standard table					Flange type standard table					
		Lead					Lead					
		4mm	5mm	8mm	10mm	20mm	4mm	5mm	8mm	10mm	20mm	
TE50B	150	0.057	–	0.071	–	–	0.060	–	0.084	–	–	0.03
	200	0.069	–	0.083	–	–	0.072	–	0.096	–	–	
	250	0.085	–	0.099	–	–	0.088	–	0.112	–	–	
	300	0.097	–	0.111	–	–	0.100	–	0.124	–	–	
	400	–	–	0.139	–	–	–	–	0.152	–	–	
	500	–	–	0.167	–	–	–	–	0.180	–	–	
TE60B	150	–	0.13	–	0.17	–	–	0.14	–	0.20	–	0.03
	200	–	0.19	–	0.23	–	–	0.20	–	0.26	–	
	300	–	0.26	–	0.30	–	–	0.27	–	0.33	–	
	400	–	0.33	–	0.36	–	–	0.34	–	0.40	–	
	500	–	0.40	–	0.44	–	–	0.41	–	0.47	–	
	600	–	0.47	–	0.51	–	–	0.48	–	0.54	–	
	700	–	–	–	–	0.76	–	–	–	–	0.88	
TE86B	340	–	–	–	0.73	1.19	–	–	–	0.81	1.50	0.05
	440	–	–	–	0.88	1.35	–	–	–	0.95	1.64	
	540	–	–	–	1.03	1.50	–	–	–	1.11	1.80	
	640	–	–	–	1.18	1.64	–	–	–	1.25	1.95	
	740	–	–	–	1.33	1.79	–	–	–	1.41	2.10	
	840	–	–	–	1.48	1.94	–	–	–	1.56	2.25	
	940	–	–	–	1.63	2.10	–	–	–	1.71	2.40	

Notes (1) When two units of slide table are used, it is about 1.5 times as long as that of one unit, and when table of motor folding back specification is used, it is about twice.
(2) For motor folding back specification, please add the following value to the value in the table.
TE50B: 0.17×10⁻⁵kg·m², TE60B: 0.39×10⁻⁵kg·m², TE86B: 0.86×10⁻⁵kg·m²

Mounting

For the processing accuracy of the Precision Positioning Table mounting surface and the tightening torque of the fixing screws, see page Ⅲ-29.

Motor Folding Back Specification

Motor folding back specification is available for Precision Positioning Table TE, space can be saved by folding back the motor and reducing the overall length of the table. For dimensions of motor folding back specification, please refer to respective dimension table.
For motor folding back specification, assembly should be made by customer since "housing applicable to the specified motor, pulley (on motor side and ball screw side), cover, motor bracket, belt and bolts necessary for assembly" are supplied. However, motor mounting bolts should be prepared by customer. The motor attachment can be attached in 4 directions as indicated in the following figure.
There is difference in dimension between where the motor attachment or the motor is lower than the bottom of the bed depending on the motor folding back direction. Do the design ensuring that the peripheral components do not interfere and that enough allowance is provided according to the approximate values in the dimension table shown in Page Ⅱ-25 to Ⅱ-30.

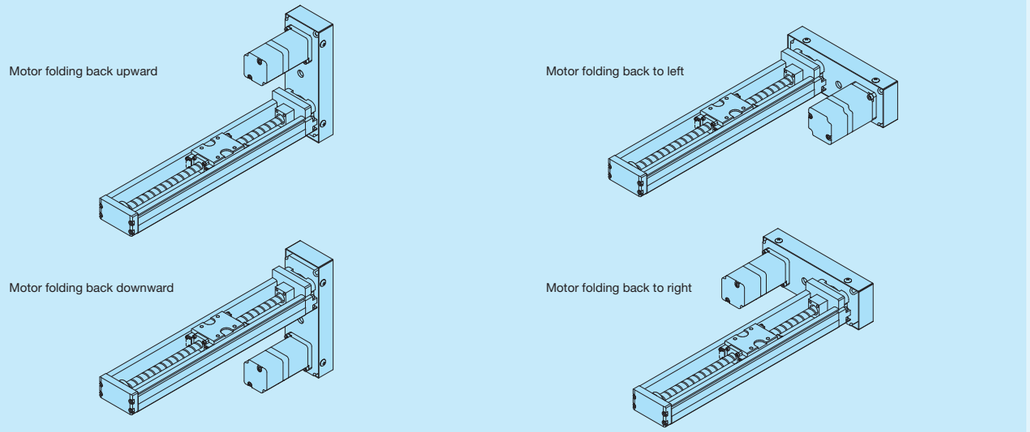

Two Slide Table Specification

Two slide table specification is available for Precision Positioning Table TE. Ball screw nuts are mounted on slide table at the motor side, and it can be driven by the motor (driving table). Ball screw nuts are not mounted on slide table at the opposite motor side, and it is free condition (driven table).
It is possible to make the structure resistant to moment load by using two slide tables in combination (Table 8). When combining slide tables, allow more clearance than "Minimum center distance between two slide tables in close contact" described in the dimension table shown in pages Ⅱ-19 to Ⅱ-30. (Enlarging the span will shorten the stroke.)

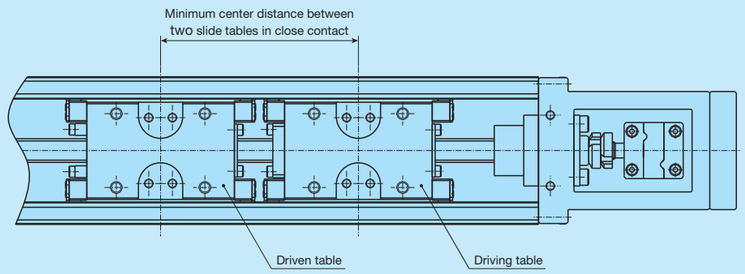

1N=0.102kgf=0.2248lbs.
1mm=0.03937inch

Sensor Specification

Table 12 Sensor timing chart

Motor inline specification

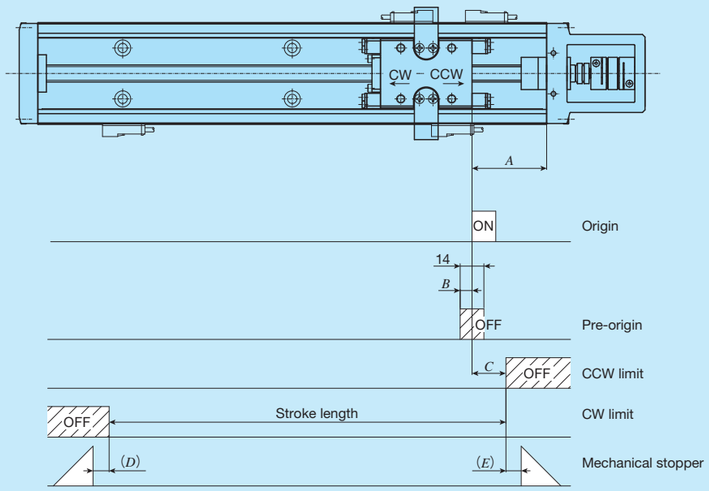

Motor folding back specification

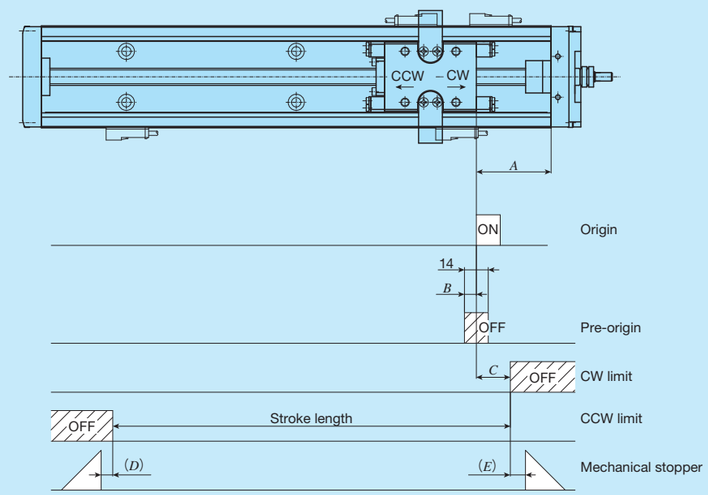

unit: mm

Model and size	Ball screw lead	*A*	*B*	*C*	*D*(1)	*E*
TE50B	4	33	2	10	6 (9)	5
	8		6			
TE60B	5	44	3	20	9.5(8.5)	9
	10		7			
	20		12			
TE86B	10	50	7	20	11 (11)	10
	20		12			

Note (1) The value in ( ) represents dimensions for two slide tables.

Remarks 1. Mounting a sensor is specified using the corresponding identification number.

2. For the specifications of respective sensors, please see the section of sensor specification in General Explanation.

3. For the motor folding back specification, CW and CCW will invert.

Dimensions of Motor Attachment

■ Motor inline specification

Remark: Motor attachment for NEMA, please see the pages Ⅲ-31 or later.

TE50B

AT000 (without attachment)

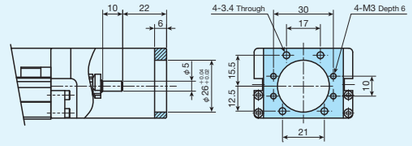

AT001

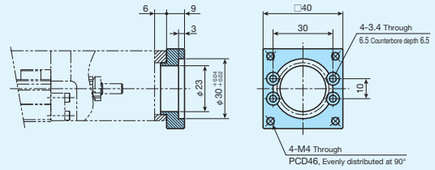

AT004

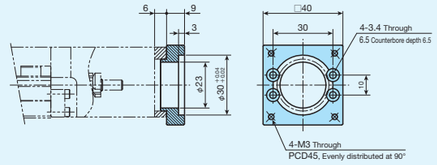

AT007
AT009

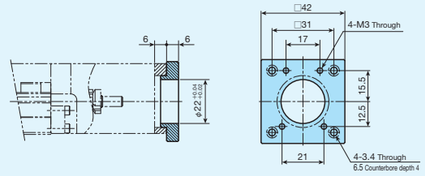

TE60B

AT000 (without attachment)

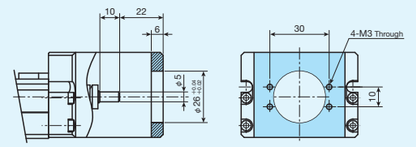

AT002

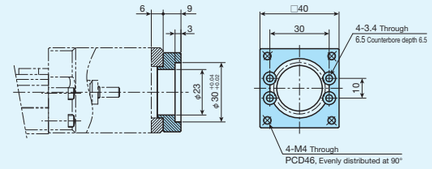

AT005

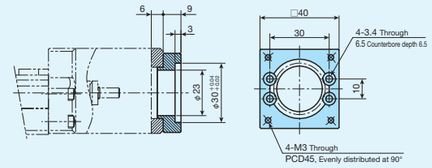

AT010

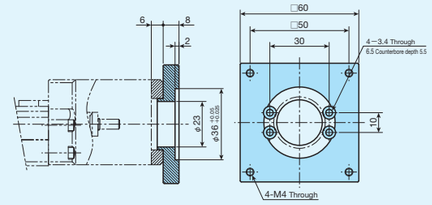

TAE9043-ATE110
TAE9043-ATE109

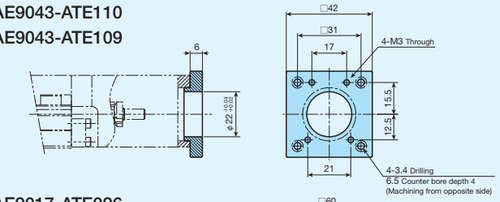

TAE9017-ATE096

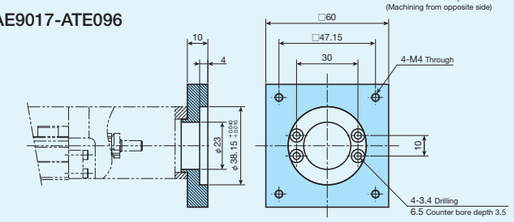

TAE9043-ATE137

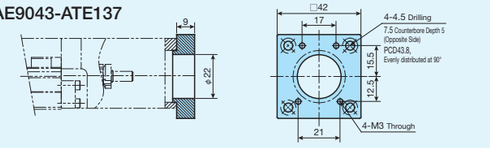

TAE9017-ATE096

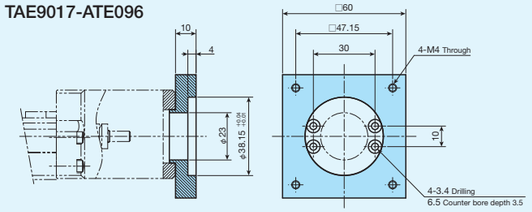

TAE9017-ATE097

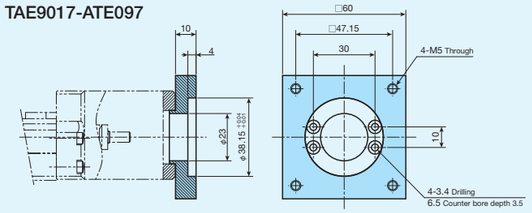

1N=0.102kgf=0.2248lbs.
1mm=0.03937inch

Dimensions of Motor Attachment

TE86B

AT000 (without attachment)

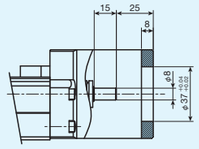

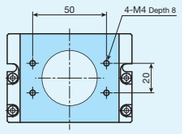

AT003

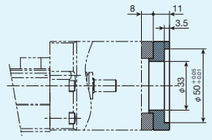

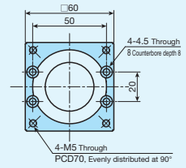

AT006

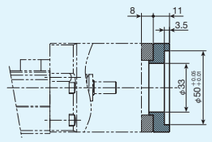

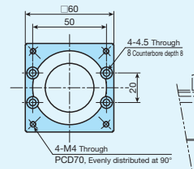

AT008
AT011

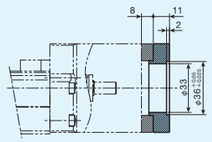

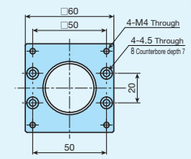

TAE9056-ATE095

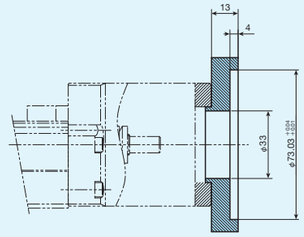

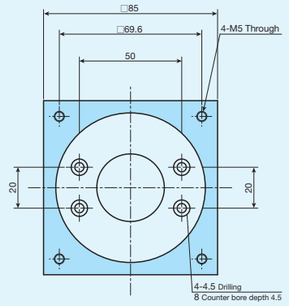

TAE9056-ATE134

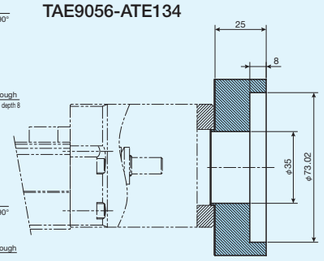

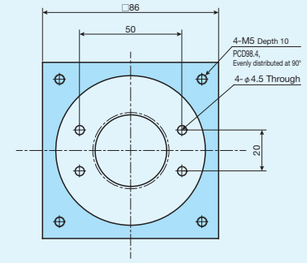

TAE9017-ATE135

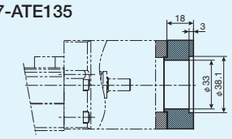

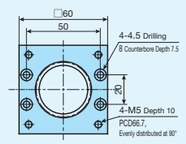

■ Motor folding back specification

TE50B

AR000 (without attachment)

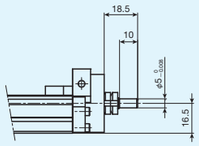

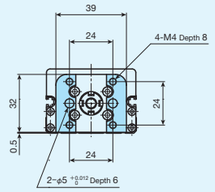

AR001

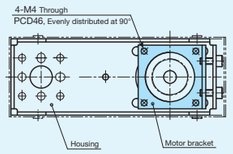

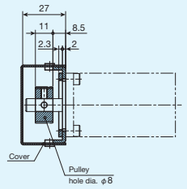

AR004

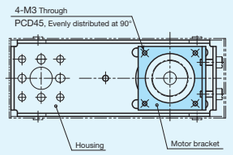

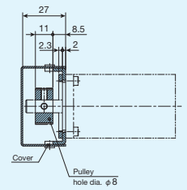

AR007

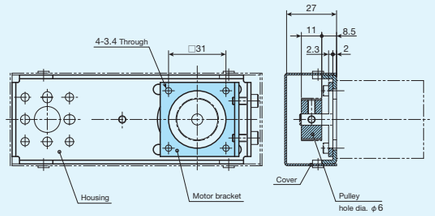

AR008

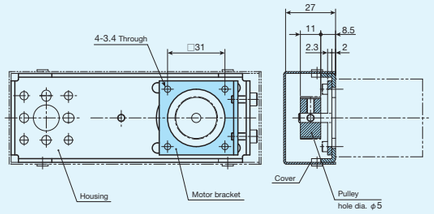

TE60B

AR000 (without attachment)

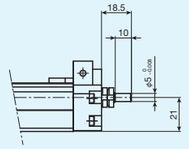

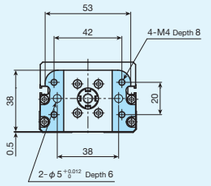

AR002

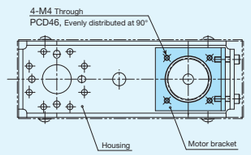

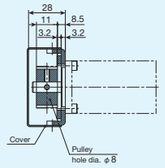

AR005

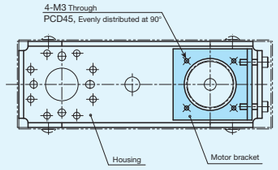

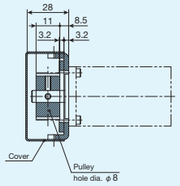

TE86B

AR000 (without attachment)

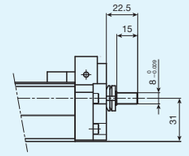

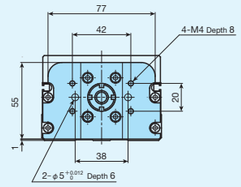

AR003

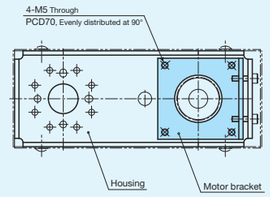

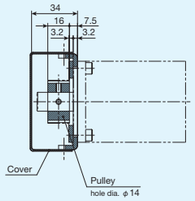

AR006

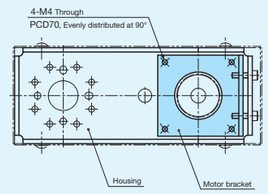

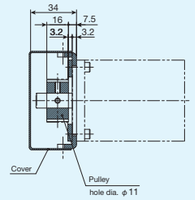

TE⋯B

1N=0.102kgf=0.2248lbs.
1mm=0.03937inch

TE50BS (Motor inline specification)

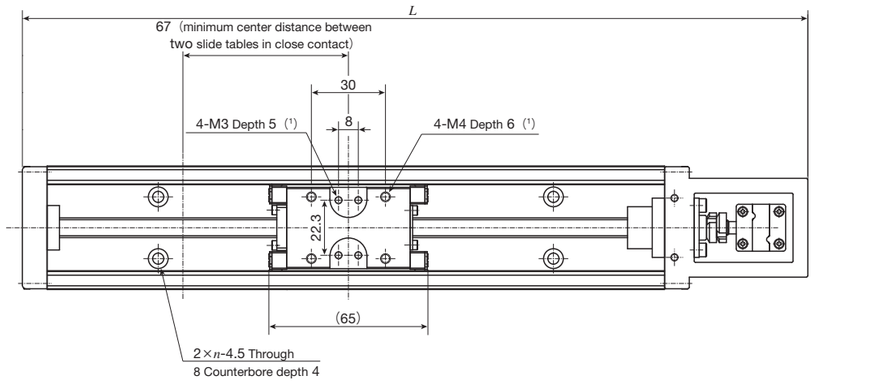

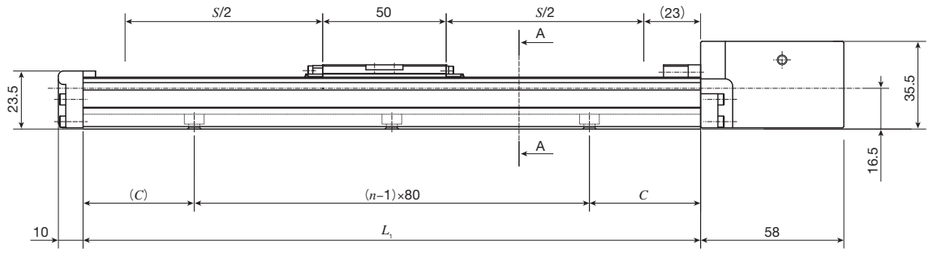

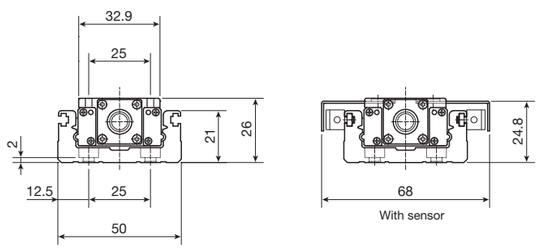

A—A Sectional dimension

unit: mm

Bed length L_1	Overall length L	Stroke length S(2)	Mounting holes of bed C	Mounting holes of bed n	Mass (Ref.) kg(3)
150	218	60(−)	35	2	0.52
200	268	110(40)	20	3	0.62
250	318	160(90)	45	3	0.72
300	368	210(140)	30	4	0.82
400	468	310(240)	40	5	1.02
500	568	410(340)	10	7	1.22

Notes (1) Too deep insertion depth of the mounting bolt may affect the running performance of the slide table, so never insert a bolt longer than the depth of the through hole.
(2) The value indicates the allowable stroke when limit sensors are mounted. The value in ( ) represents dimension for two slide tables in close contact.
(3) The value shows the mass of the entire table with one slide table, and it is 0.07kg heavier with two slide tables.
Remarks 1. Motor attachment for AC servomotor is 3.5mm lower than the bottom of the bed.
2. Motor attachment for stepper motor is 4.5mm lower than the bottom of the bed.

TE50BF (Motor inline specification)

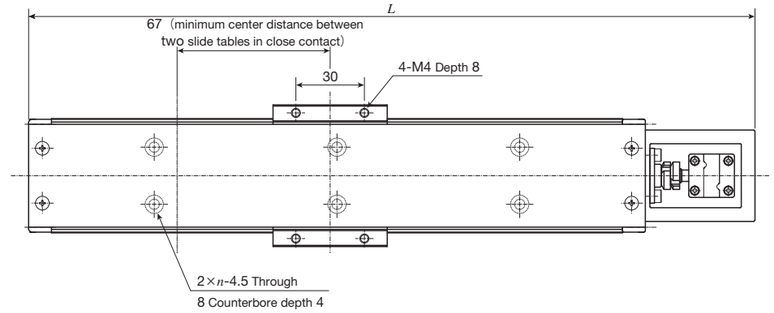

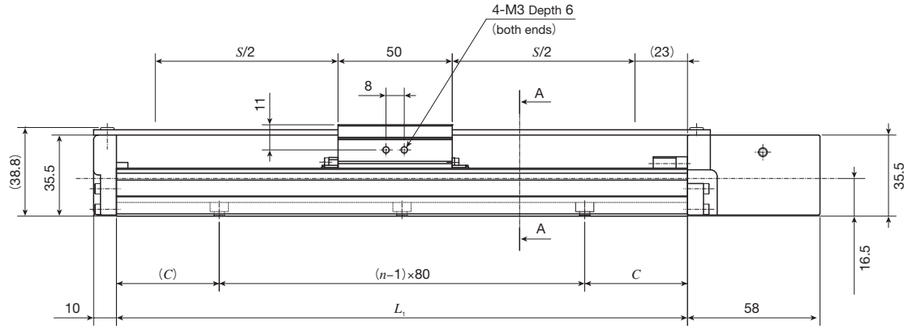

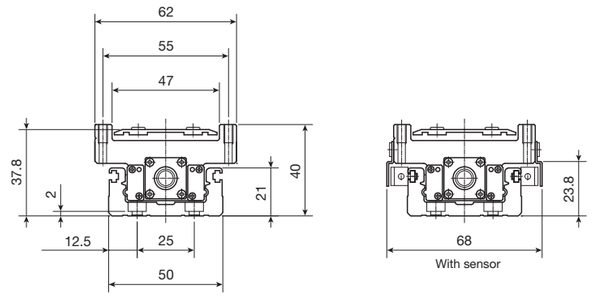

A—A Sectional dimension

unit: mm

Bed length L_1	Overall length L	Stroke length S(1)	Mounting holes of bed C	Mounting holes of bed n	Mass (Ref.) kg(2)
150	218	60(−)	35	2	0.65
200	268	110(40)	20	3	0.75
250	318	160(90)	45	3	0.85
300	368	210(140)	30	4	0.94
400	468	310(240)	40	5	1.14
500	568	410(340)	10	7	1.33

Notes (1) The value indicates the allowable stroke when limit sensors are mounted. The value in ( ) represents dimension for two slide tables in close contact.
(2) The value shows the mass of the entire table with one slide table, and it is 0.16kg heavier with two slide tables.
Remarks 1. Motor attachment for AC servomotor is 3.5mm lower than the bottom of the bed.
2. Motor attachment for stepper motor is 4.5mm lower than the bottom of the bed.

1N=0.102kgf=0.2248lbs.
1mm=0.03937inch

TE60BS (Motor inline specification)

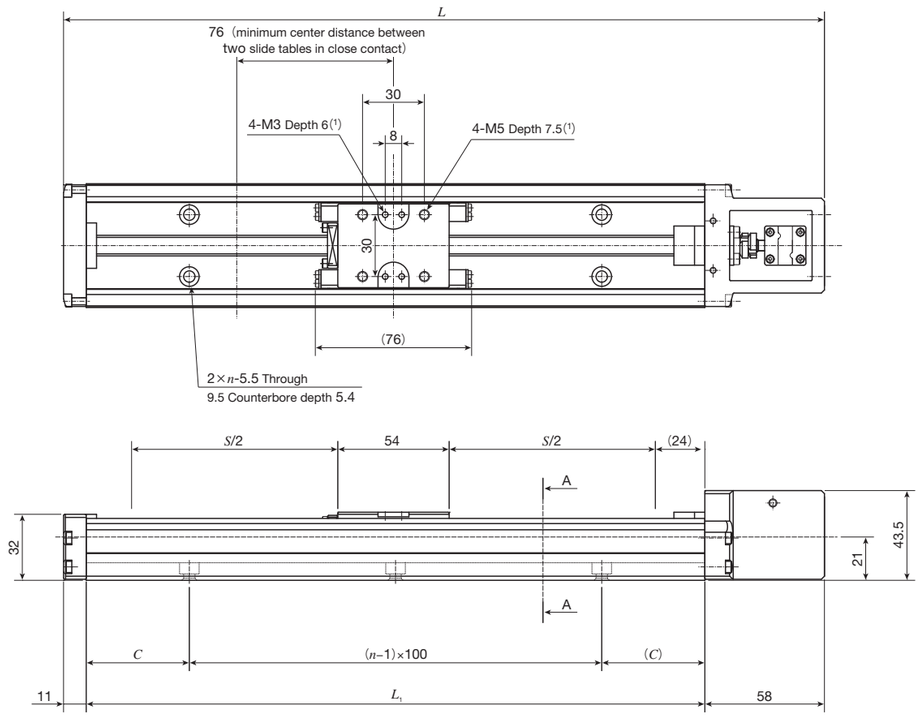

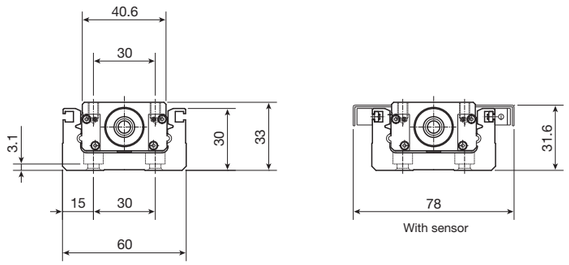

A—A Sectional dimension

unit: mm

Bed length L_1	Overall length L	Stroke length S(2)	Mounting holes of bed C	Mounting holes of bed n	Mass (Ref.) kg(3)
150	219	50(−)	25	2	0.9
200	269	100(−)	50	2	1.0
300	369	200(125)	50	3	1.3
400	469	300(225)	50	4	1.6
500	569	400(325)	50	5	1.9
600	669	500(425)	50	6	2.2
700	769	600(525)	50	7	2.5

Notes (1) Too deep a fixing thread depth of the mounting bolt may affect the running performance of the slide table, so never insert a bolt longer than the depth of the tapped hole.
(2) The value indicates the allowable stroke when limit sensors are mounted. The value in ( ) represents dimension for two slide tables in close contact.
(3) The value shows the mass of the entire table with one slide table, and it is 0.1kg heavier with two slide tables.
Remark: Motor attachment for stepper motor is 9mm lower than the bottom of the bed.

TE60BF (Motor inline specification)

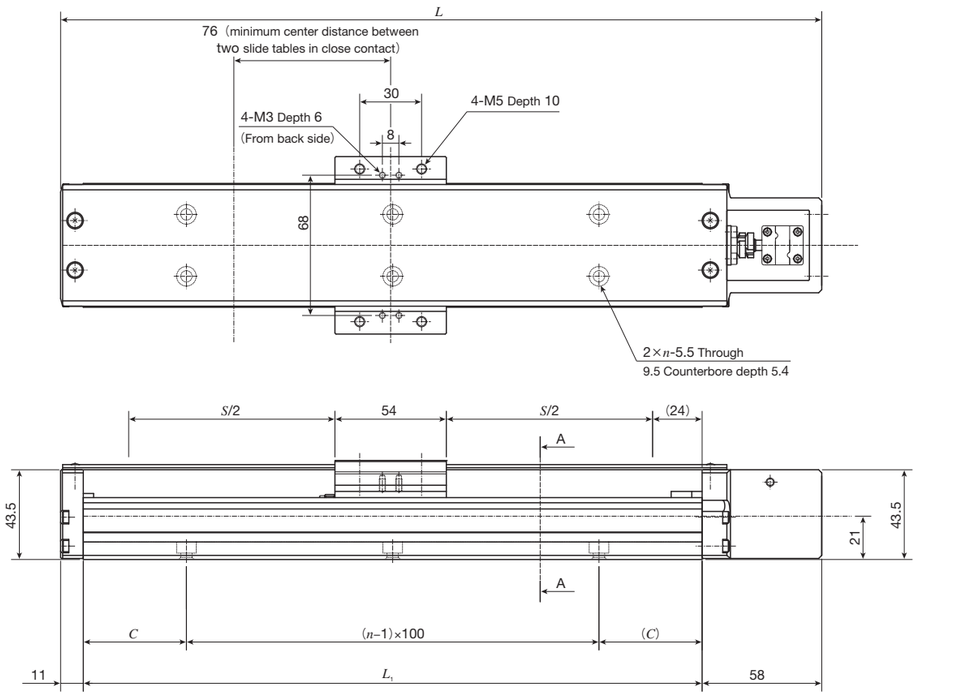

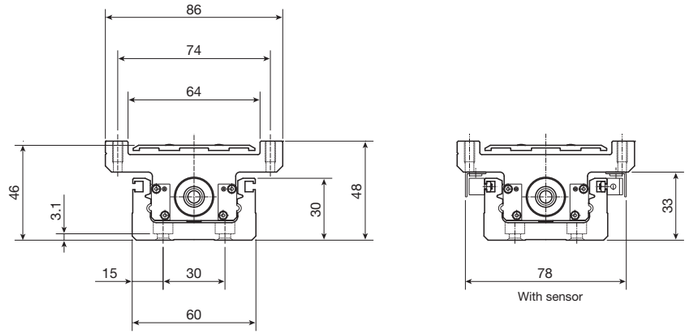

A—A Sectional dimension

unit: mm

Bed length L_1	Overall length L	Stroke length S(1)	Mounting holes of bed C	Mounting holes of bed n	Mass (Ref.) kg(2)
150	219	50(−)	25	2	1.1
200	269	100(−)	50	2	1.2
300	369	200(125)	50	3	1.5
400	469	300(225)	50	4	1.9
500	569	400(325)	50	5	2.2
600	669	500(425)	50	6	2.5
700	769	600(525)	50	7	2.8

Notes (1) The value indicates the allowable stroke when limit sensors are mounted. The value in ( ) represents dimension for two slide tables in close contact.
(2) The value shows the mass of the entire table with one slide table, and it is 0.2kg heavier with two slide tables.
Remark: Motor attachment for stepper motor is 9mm lower than the bottom of the bed.

1N=0.102kgf=0.2248lbs.
1mm=0.03937inch

TE86BS (Motor inline specification)

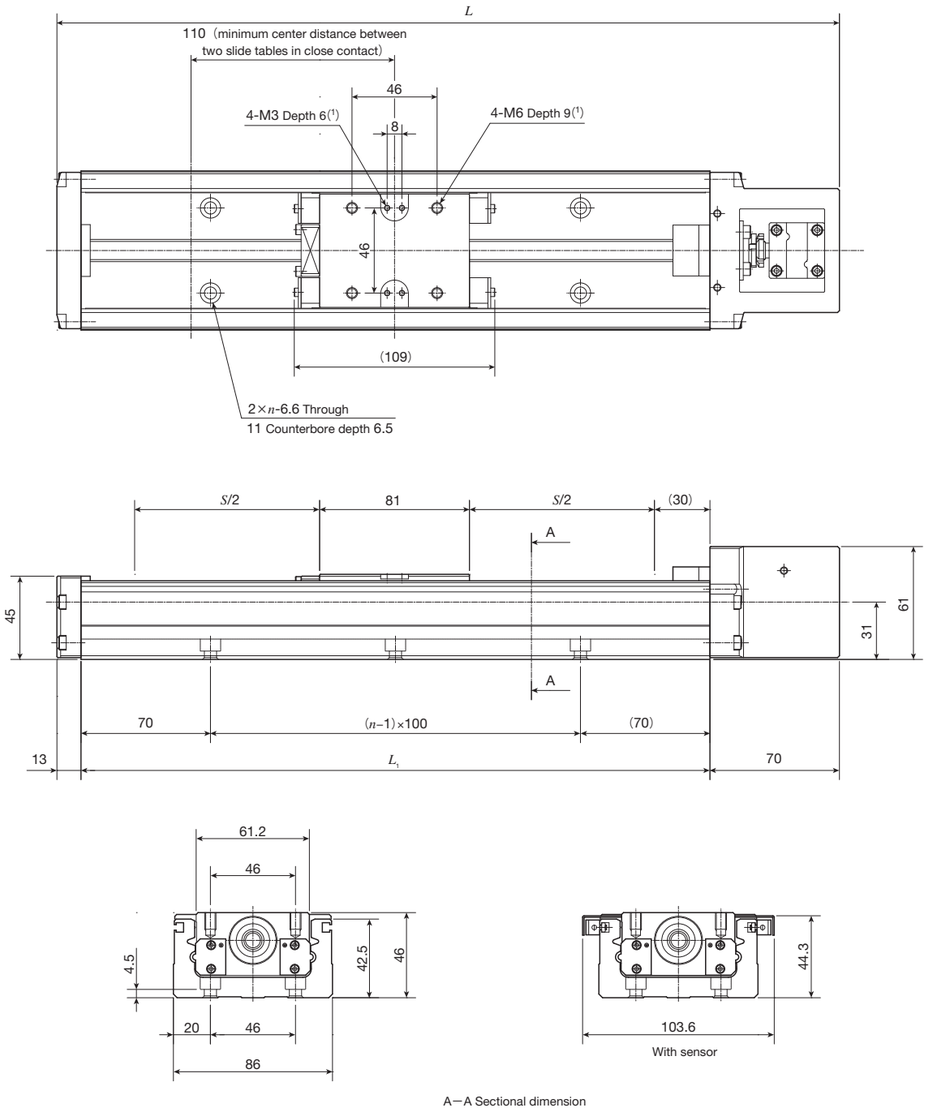

A—A Sectional dimension

unit: mm

Bed length L_1	Overall length L	Stroke length S(2)	Mounting holes of bed n	Mass (Ref.) kg(3)
340	423	200(90)	3	3.1
440	523	300(190)	4	3.7
540	623	400(290)	5	4.2
640	723	500(390)	6	4.7
740	823	600(490)	7	5.2
840	923	700(590)	8	5.7
940	1 023	800(690)	9	6.3

Notes (1) Too deep a fixing thread depth of the mounting bolt may affect the running performance of the slide table, so never insert a bolt longer than the depth of the tapped hole.
(2) The value indicates the allowable stroke when limit sensors are mounted. The value in ( ) represents dimension for two slide tables in close contact.
(3) The value shows the mass of the entire table with one slide table, and it is 0.3kg heavier with two slide tables.

TE86BF (Motor inline specification)

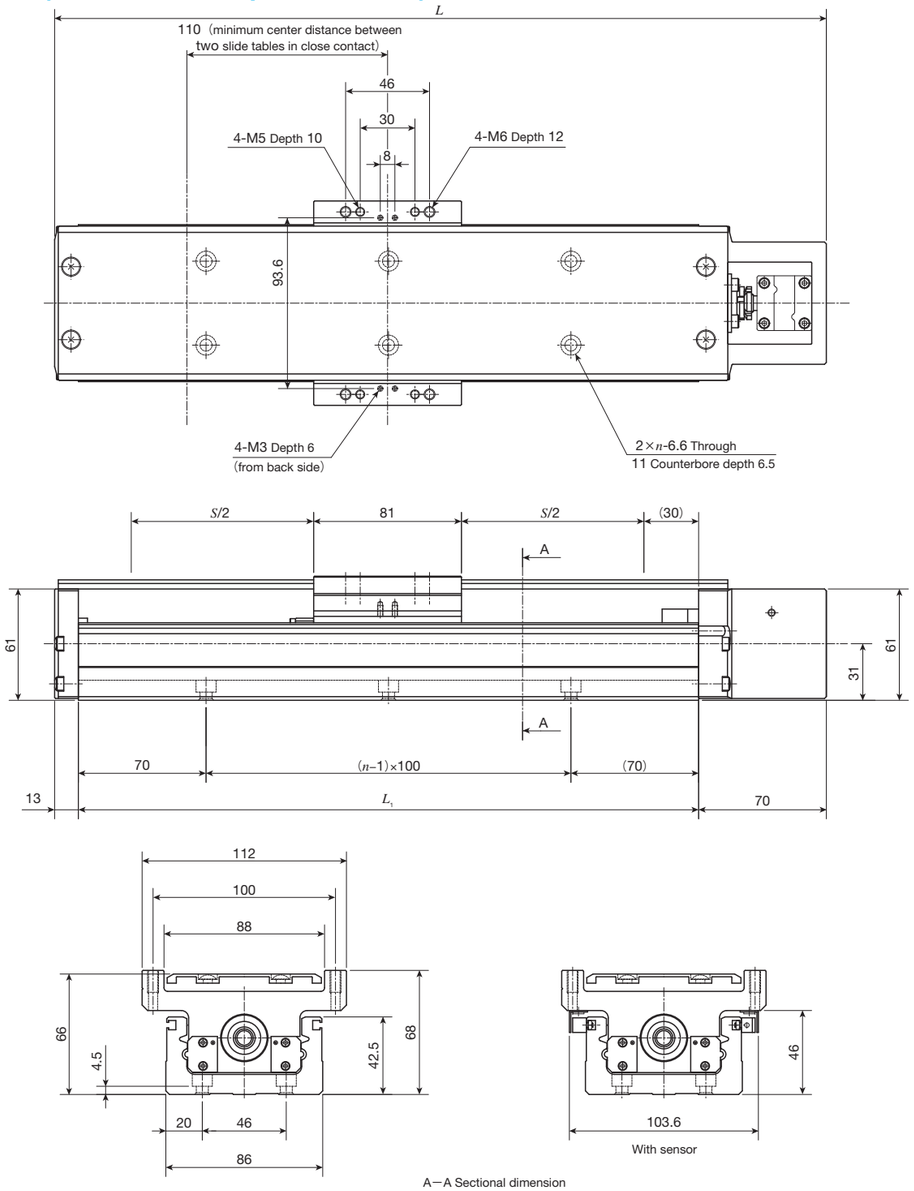

A—A Sectional dimension

unit: mm

Bed length L_1	Overall length L	Stroke length S(1)	Mounting holes of bed n	Mass (Ref.) kg(2)
340	423	200(90)	3	3.7
440	523	300(190)	4	4.3
540	623	400(290)	5	4.9
640	723	500(390)	6	5.5
740	823	600(490)	7	6.1
840	923	700(590)	8	6.7
940	1 023	800(690)	9	7.2

Notes (1) The value indicates the allowable stroke when limit sensors are mounted. The value in ( ) represents dimension for two slide tables in close contact.
(2) The value shows the mass of the entire table with one slide table, and it is 0.6kg heavier with two slide tables.

1N=0.102kgf=0.2248lbs.
1mm=0.03937inch

TE50BS (Motor folding back specification)

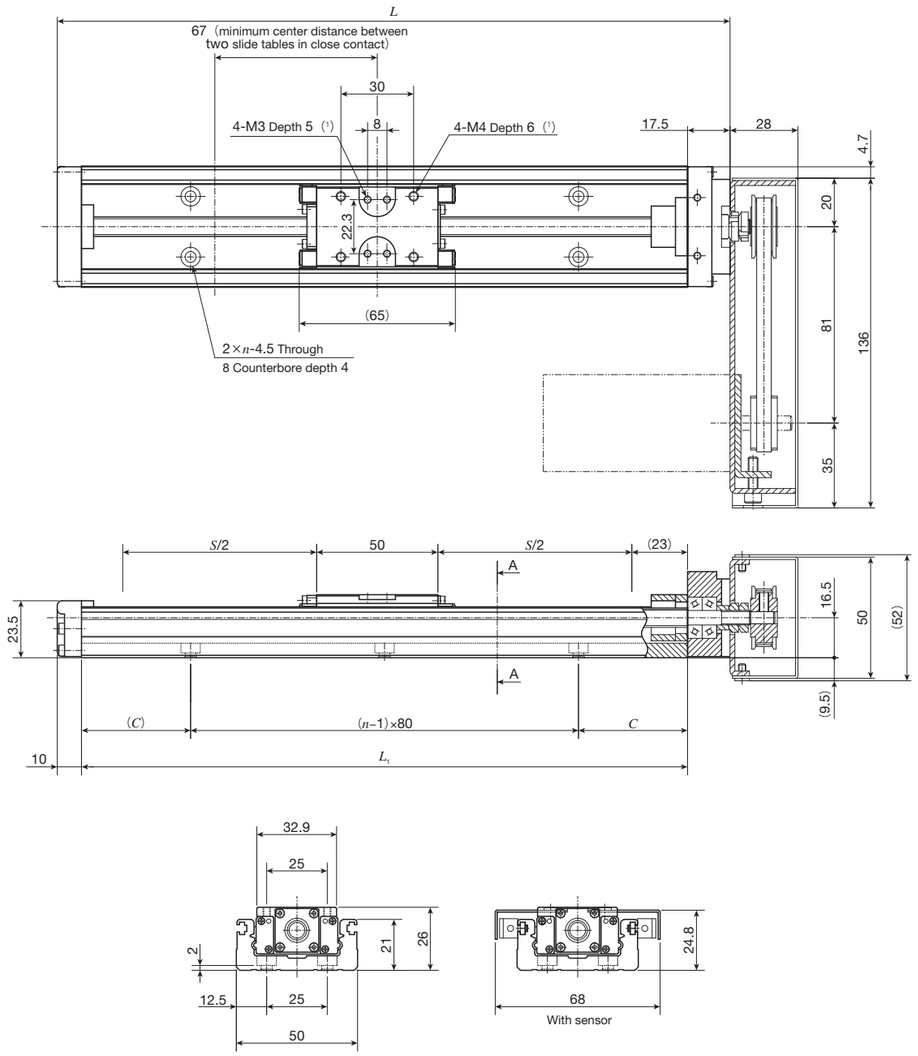

A—A Sectional dimension

unit: mm

Bed length L_1	Overall length L	Stroke length S(2)	Mounting holes of bed C	Mounting holes of bed n	Mass (Ref.) kg(3)
150	177.5	60(−)	35	2	0.72
200	227.5	110(40)	20	3	0.82
250	277.5	160(90)	45	3	0.92
300	327.5	210(140)	30	4	1.02
400	427.5	310(240)	40	5	1.22
500	527.5	410(340)	10	7	1.42

Notes (1) Too deep insertion depth of the mounting bolt may affect the running performance of the slide table, so never insert a bolt longer than the depth of the through hole.
(2) The value indicates the allowable stroke when limit sensors are mounted. The value in ( ) represents dimension for two slide tables in close contact.
(3) The value shows the mass of the entire table with one slide table, and it is 0.07kg heavier with two slide tables.
Remarks 1. Parts for motor attachment are appended, and this figure indicates a finished state after assembled by the customer.
2. If folded back to right and left, motor attachment is about 9.5mm lower than the bottom of the bed. In addition, it is about 2.5 to 3.5mm lower than the bottom of the bed if AC servomotor is mounted by customers, and about 4.5mm lower if stepper motor is mounted.
3. If folded back upward, motor attachment is about 3.5mm lower than the bottom of the bed.

TE50BF (Motor folding back specification)

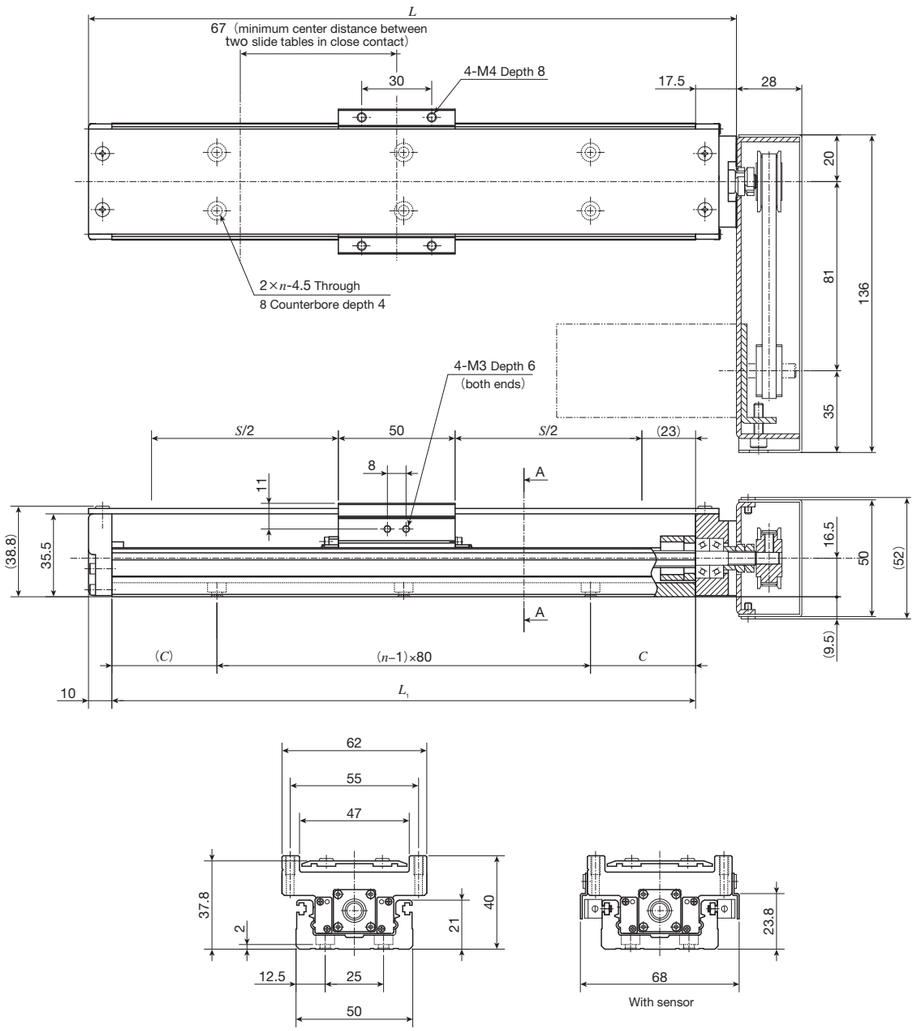

A—A Sectional dimension

unit: mm

Bed length L_1	Overall length L	Stroke length S(1)	Mounting holes of bed C	Mounting holes of bed n	Mass (Ref.) kg(2)
150	177.5	60(−)	35	2	0.85
200	227.5	110(40)	20	3	0.95
250	277.5	160(90)	45	3	1.05
300	327.5	210(140)	30	4	1.15
400	427.5	310(240)	40	5	1.35
500	527.5	410(340)	10	7	1.55

Notes (1) The value indicates the allowable stroke when limit sensors are mounted. The value in ( ) represents dimension for two slide tables in close contact.
(2) The value shows the mass of the entire table with one slide table, and it is 0.16kg heavier with two slide tables.
Remarks 1. Parts for motor attachment are appended, and this figure indicates a finished state after assembled by the customer.
2. If folded back to right and left, motor attachment is about 9.5mm lower than the bottom of the bed. In addition, it is about 2.5 to 3.5mm lower than the bottom of the bed if AC servomotor is mounted by customers, and about 4.5mm lower if stepper motor is mounted.
3. If folded back upward, motor attachment is about 3.5mm lower than the bottom of the bed.

1N=0.102kgf=0.2248lbs.
1mm=0.03937inch

TE60BS (Motor folding back specification)

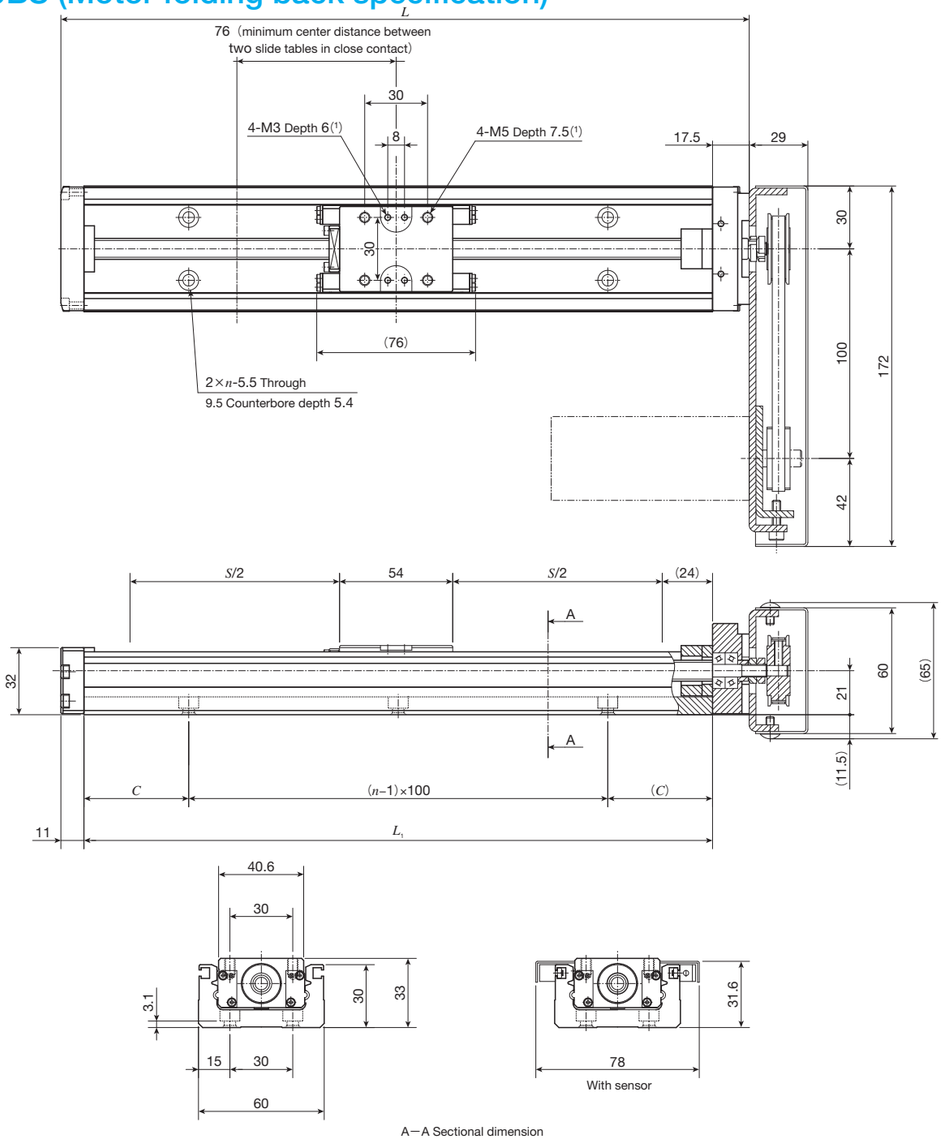

A—A Sectional dimension

unit: mm

Bed length L_1	Overall length L	Stroke length S(2)	Mounting holes of bed C	Mounting holes of bed n	Mass (Ref.) kg(3)
150	178.5	50(−)	25	2	1.2
200	228.5	100(−)	50	2	1.3
300	328.5	200(125)	50	3	1.6
400	428.5	300(225)	50	4	1.9
500	528.5	400(325)	50	5	2.2
600	628.5	500(425)	50	6	2.5
700	728.5	600(525)	50	7	2.8

Notes (1) Too deep a fixing thread depth of the mounting bolt may affect the running performance of the slide table, so never insert a bolt longer than the depth of the tapped hole.
(2) The value indicates the allowable stroke when limit sensors are mounted. The value in ( ) represents dimension for two slide tables in close contact.
(3) The value shows the mass of the entire table with one slide table, and it is 0.1kg heavier with two slide tables.

Remarks 1. Parts for motor attachment are appended, and this figure indicates a finished state after assembled by the customer.
2. If folded back to right and left, motor attachment is about 11.5mm lower than the bottom of the bed.
3. If folded back upward, motor attachment is about 9mm lower than the bottom of the bed.

TE60BF (Motor folding back specification)

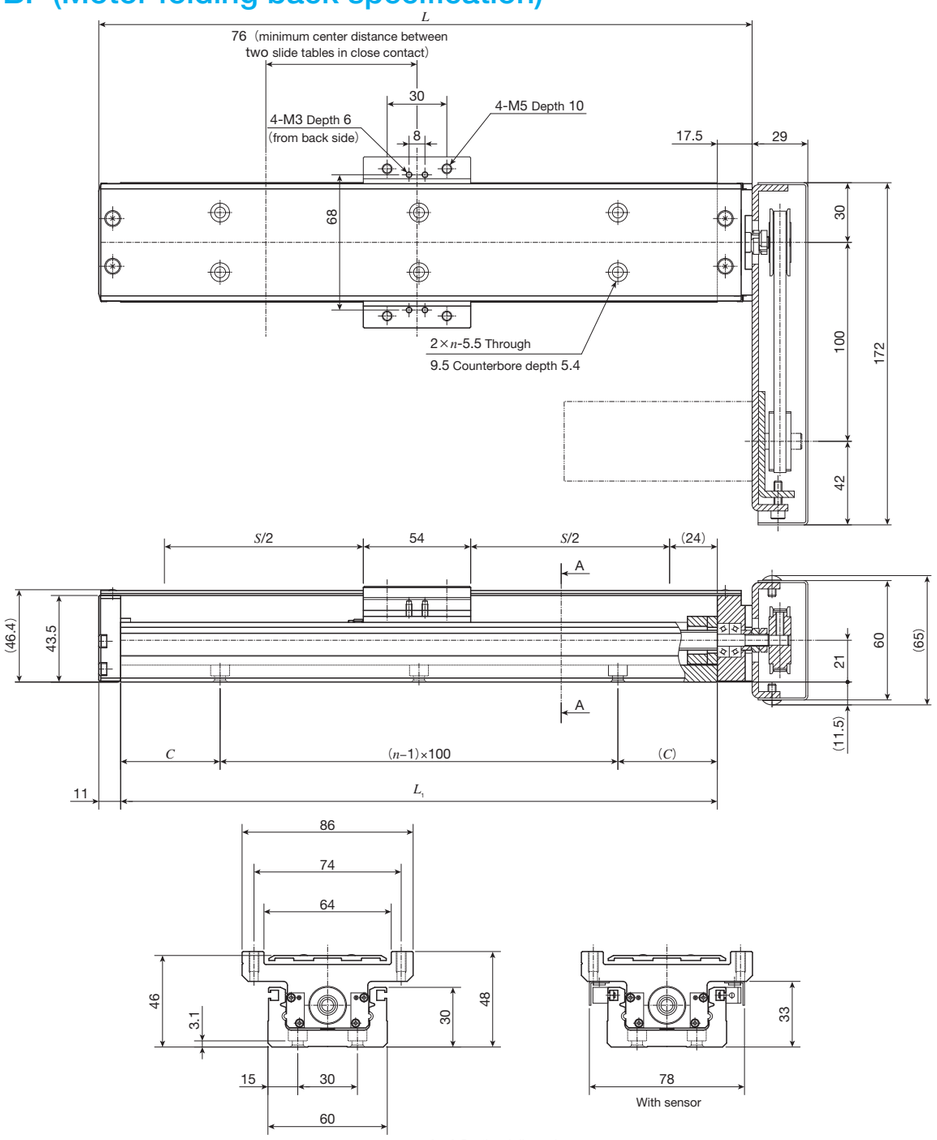

A—A Sectional dimension

unit: mm

Bed length L_1	Overall length L	Stroke length S(1)	Mounting holes of bed C	Mounting holes of bed n	Mass (Ref.) kg(2)
150	178.5	50(−)	25	2	1.4
200	228.5	100(−)	50	2	1.5
300	328.5	200(125)	50	3	1.8
400	428.5	300(225)	50	4	2.2
500	528.5	400(325)	50	5	2.5
600	628.5	500(425)	50	6	2.8
700	728.5	600(525)	50	7	3.1

Notes (1) The value indicates the allowable stroke when limit sensors are mounted. The value in ( ) represents dimension for two slide tables in close contact.
(2) The value shows the mass of the entire table with one slide table, and it is 0.2kg heavier with two slide tables.

Remarks 1. Parts for motor attachment are appended, and this figure indicates a finished state after assembled by the customer.
2. If folded back to right and left, motor attachment is about 11.5mm lower than the bottom of the bed.
3. If folded back upward, motor attachment is about 9mm lower than the bottom of the bed.

1N=0.102kgf=0.2248lbs.
1mm=0.03937inch

TE86BS (Motor folding back specification)

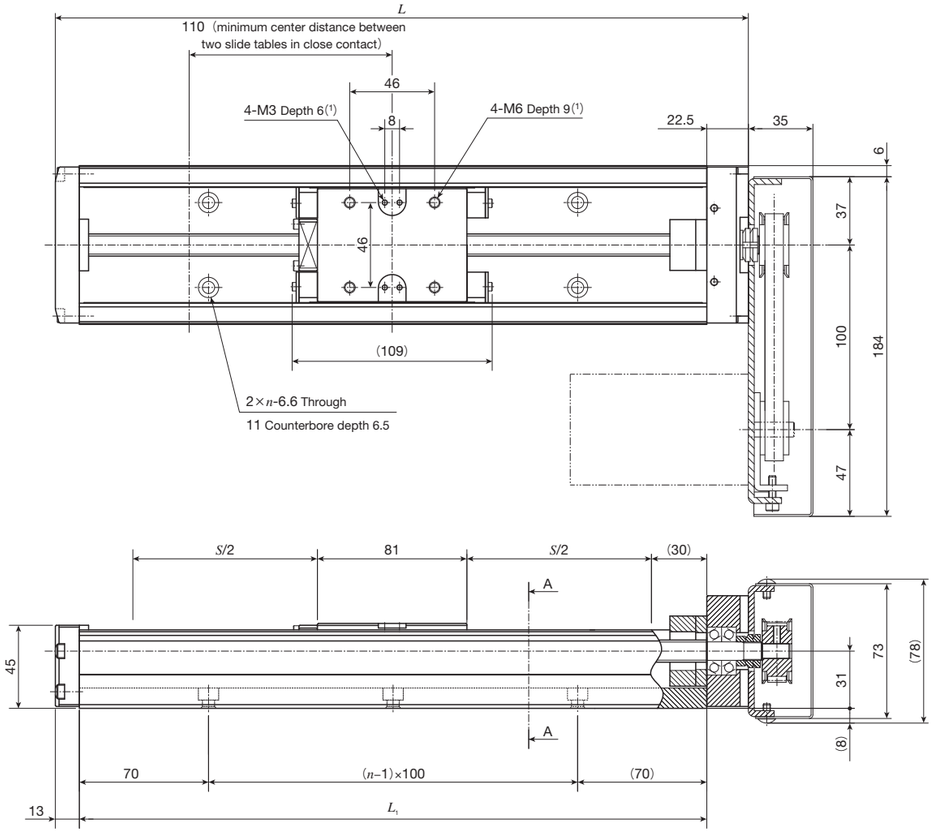

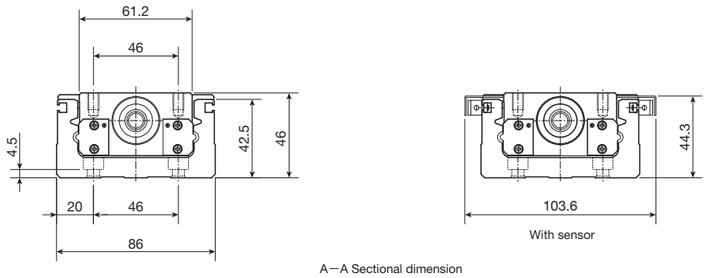

unit: mm

Bed length L_1	Overall length L	Stroke length S(2)	Mounting holes of bed n	Mass (Ref.) kg(3)
340	375.5	200(90)	3	4.0
440	475.5	300(190)	4	4.6
540	575.5	400(290)	5	5.1
640	675.5	500(390)	6	5.6
740	775.5	600(490)	7	6.1
840	875.5	700(590)	8	6.6
940	975.5	800(690)	9	7.2

Notes (1) Too deep a fixing thread depth of the mounting bolt may affect the running performance of the slide table, so never insert a bolt longer than the depth of the tapped hole.
(2) The value indicates the allowable stroke when limit sensors are mounted. The value in ( ) represents dimension for two slide tables in close contact.
(3) The value shows the mass of the entire table with one slide table, and it is 0.3kg heavier with two slide tables.
Remarks 1. Parts for motor attachment are appended, and this figure indicates a finished state after assembled by the customer.
2. If folded back to right and left, motor attachment is about 8mm lower than the bottom of the bed.
3. If folded back upward, motor attachment is about 6mm lower than the bottom of the bed.

TE86BF (Motor folding back specification)

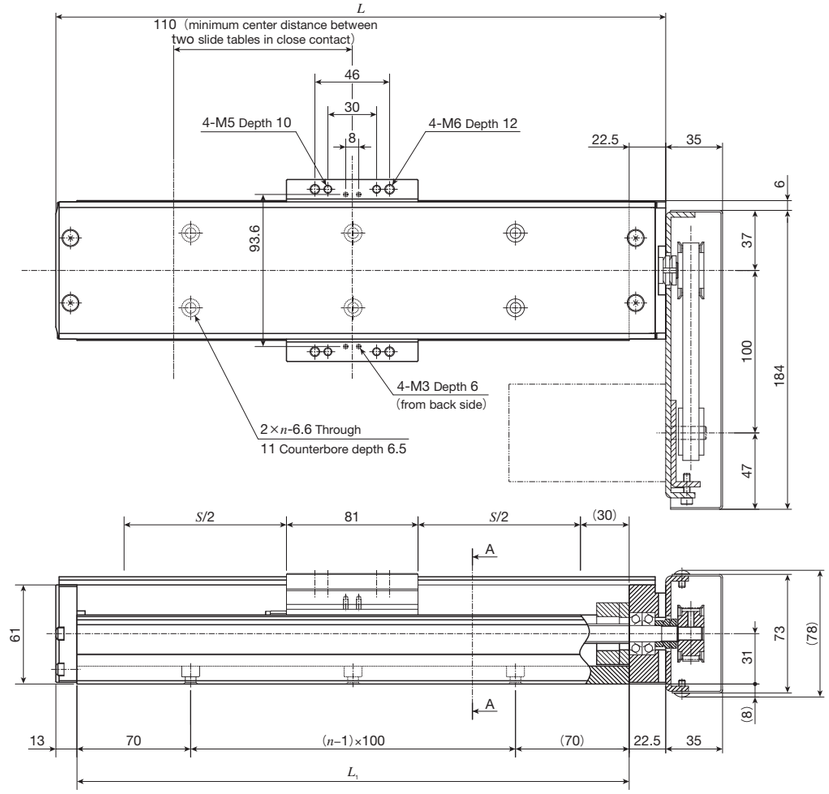

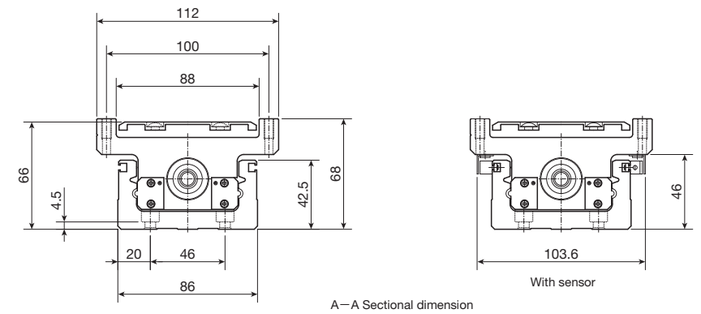

unit: mm

Bed length L_1	Overall length L	Stroke length S(1)	Mounting holes of bed n	Mass (Ref.) kg(2)
340	375.5	200(90)	3	4.6
440	475.5	300(190)	4	5.2
540	575.5	400(290)	5	5.8
640	675.5	500(390)	6	6.4
740	775.5	600(490)	7	7.0
840	875.5	700(590)	8	7.6
940	975.5	800(690)	9	8.1

Notes (1) The value indicates the allowable stroke when limit sensors are mounted. The value in ( ) represents dimension for two slide tables in close contact.
(2) The value shows the mass of the entire table with one slide table, and it is 0.6kg heavier with two slide tables.
Remarks 1. Parts for motor attachment are appended, and this figure indicates a finished state after assembled by the customer.
2. If folded back to right and left, motor attachment is about 8mm lower than the bottom of the bed.
3. If folded back upward, motor attachment is about 6mm lower than the bottom of the bed.

1N=0.102kgf=0.2248lbs.
1mm=0.03937inch

TU

TU

C-Lube Maintenance-free

Ball screw

Linear

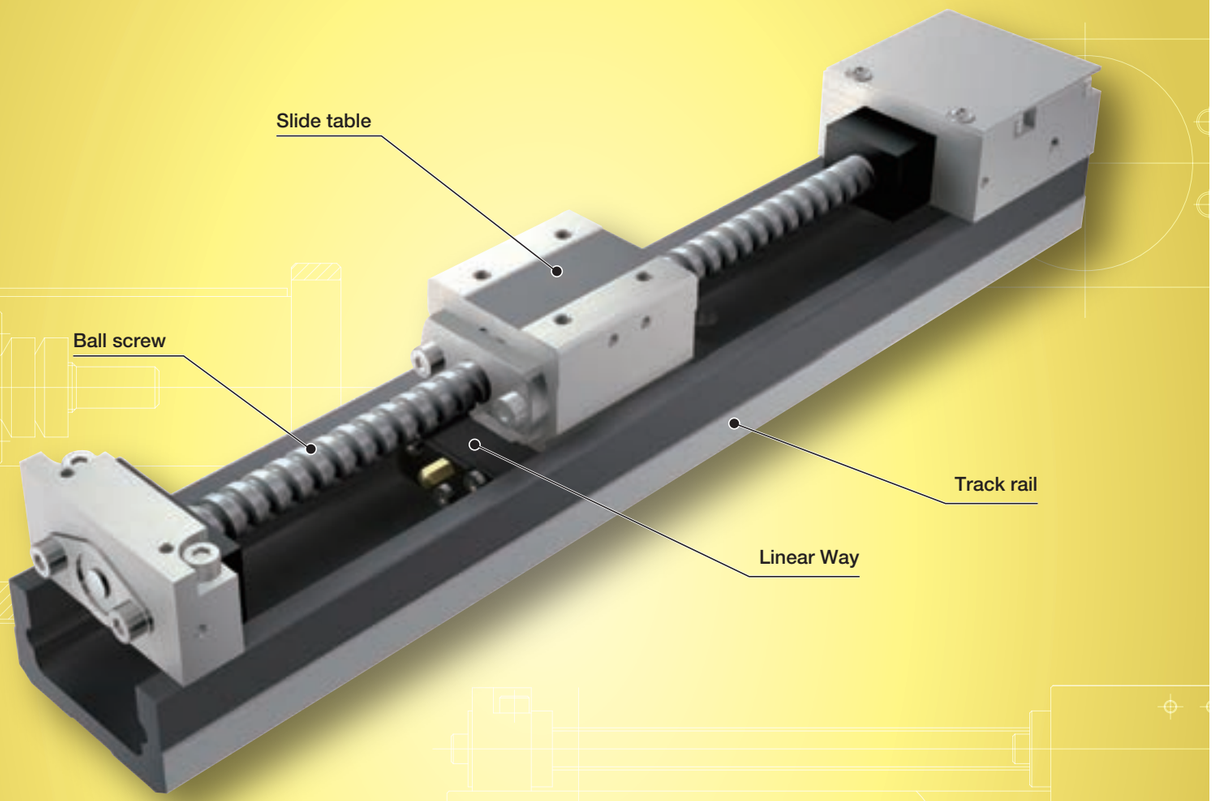

Major product specifications

Driving method	Precision ball screw and rolled ball screw
Linear motion rolling guide	Linear Way（ball type）
Built-in lubrication part	No built-in (The identification number is provided for your selection to attach lubrication part "C-Lube" or not)
Material of table and bed	High carbon steel
Sensor	Select by identification number

Accuracy

unit: mm

Positioning repeatability	±0.002～0.040
Positioning accuracy	0.020～0.050
Lost motion	–
Parallelism in table motion A	–
Parallelism in table motion B	0.008～0.030
Attitude accuracy	–
Straightness	–
Backlash	0.003～0.050

Points

● Compact and slim type positioning table with an original U-shaped track rail

1 Precision Positioning Table TU is a compact and slim type positioning table with a slide table assembled inside a U-shaped track rail.
Also, by adopting a U-shaped track rail, the rigidity of the track rail under moment load and torsion is greatly increased. The track rail can be used as a structure beam of the machine and equipment. Therefore, freedom of design is expanded for user.

● Slide table with high accuracy and high rigidity in a single structure

2 The slide table is an integral part of a linear motion rolling guide mechanism, in which large diameter steel balls are arranged in two rows and make four-point contact with the raceways. High accuracy and high rigidity positioning can thus be obtained even in applications where fluctuating load or complex load is applied.

● The optimal table specification can be selected from a variety of options Page Ⅱ-35

3 The optimal positioning table for each specific application can be configured easily by only indicating required functions and performance from our substantial size variations and a variety of options by the identification number.

Variation

Shape		Model	Track rail width（mm） 25	30	40	50	60	86	100	130
Standard	Short table	TU···C	–	–	☆	☆	☆	☆	–	–
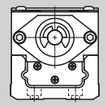	Standard table	TU···S	☆	☆	☆	☆	☆	☆	☆	☆
	Long table	TU···G	–	–	☆	☆	☆	☆	–	–
With flange	Short table	TU···FC	–	–	–	–	☆	☆	–	–
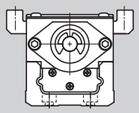	Standard table	TU···F	☆	☆	☆	☆	☆	☆	☆	☆
	Long table	TU···FG	–	–	–	–	☆	☆	–	–

1N=0.102kgf=0.2248lbs.
1mm=0.03937inch

TU

Special specifications that can be specified by the identification number

Shape and length of the slide table

The shape can be selected from two types, "standard" type and "with flange" type, and three types with different length with same section, i.e. short, standard, and long are listed on lineup. A bridge cover and XY bracket can be attached to the "with flange" type.

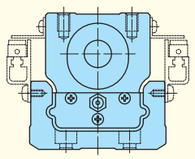

Standard
Short (C), standard (no symbol), long (G)

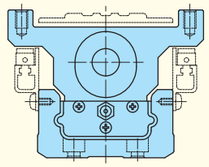

With flange
Short (FC), standard (F), long (FG)

Number of slide tables

Two slide tables can be mounted on the track rail depending on the applied load and the moment.

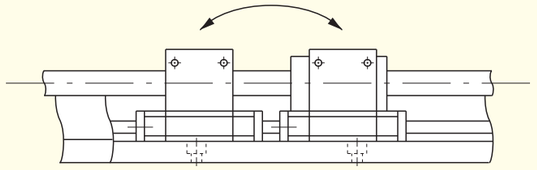

Type and lead of ball screw

Rolled ball screws and precision ball screws can be selected according to required accuracy. Ball screw lead is also selectable. The specification without ball screw can be used as a driven side linear motion rolling guide in biaxial parallel arrangement.

Designation of sensor

A variety of sensors can be specified for mounting, including limit sensors and origin sensors.

Table with C-Lube

Maintenance works such as relubricating with grease for ball screws and linear motion rolling guides can be reduced significantly by attaching lubrication part "C-Lube" impregnated with lubricant.

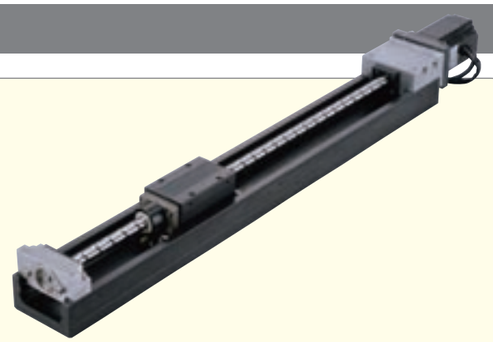

Motor folding back specification

The motor folding back specification table can realize space saving by reducing the overall length of the table.

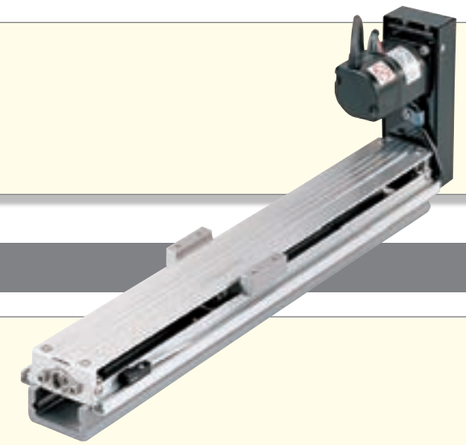

With bridge cover

A bridge cover can be attached to the "With flange" type.

Table with bellows

A series of tables with bellows is available for preventing foreign matter from intruding into the table by covering the linear motion rolling guide and drive section with bellows.

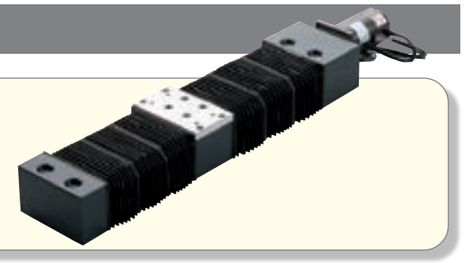

Black chrome surface treatment

Black permeable film is applied on the surface of slide table and ball screw to improve the corrosion resistance.

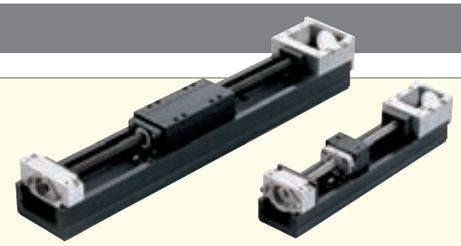

XY bracket

XY table can be configured easily since a series of XY bracket is available.

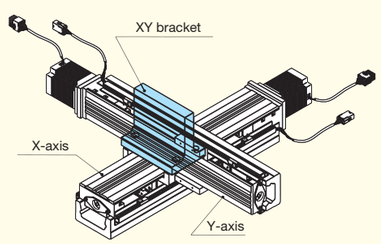

Identification Number

Example of an Identification Number

1	2	3	4		5	6	7	8	9	10	11	12
TU	86	FG	89	/	AT105	G	10	S	0	0	R	Q

1 **Model** Page Ⅱ-38

2 **Size** Page Ⅱ-38

3 **Shape of slide table** Page Ⅱ-38

4 **Length of track rail** Page Ⅱ-38

5 **Designation of motor attachment** Page Ⅱ-39

6 **Ball screw type** Page Ⅱ-39

7 **Ball screw lead** Page Ⅱ-39

8 **Number of slide table** Page Ⅱ-39

9 **Cover specification** Page Ⅱ-40

10 **Specification of sensor** Page Ⅱ-40

11 **Specification of surface treatment** Page Ⅱ-40

12 **Specification of C-Lube** Page Ⅱ-40

Identification Number and Specification

1 Model

TU: Precision Positioning Table TU

2 Size

Size indicates bed width.
Select a size from the list of Table 1.

3 Shape of slide table

C : Short table
S : Standard table
G : Long table
FC: Flange type short table
F : Flange type standard table
FG: Flange type long table

Table 1 Application of shape of slide table

Model and size	Model code					
	TU···C	TU···S	TU···G	TU···FC	TU···F	TU···FG
TU 25	–	○	–	–	○	–
TU 30	–	○	–	–	○	–
TU 40	○	○	○	–	○	–
TU 50	○	○	○	–	○	–
TU 60	○	○	○	○	○	○
TU 86	○	○	○	○	○	○
TU100	–	○	–	–	○	–
TU130	–	○	–	–	○	–

4 Length of track rail

From the [Identification] of track rail length shown in Table 2.1 and 2.2, select your desired one.

Table 2.1 Length of track rail (motor inline specification) unit: mm

Model and size	[Identification] of the length and dimensions of the track rail										
TU 25	[13] 130	[16] 165	[20] 200	–	–	–	–	–	–	–	–
TU 30	[14] 140	[18] 180	[22] 220	[26] 260	[30] 300	[34] 340	–	–	–	–	–
TU 40	[18] 180	[24] 240	[30] 300	[36] 360	[42] 420	–	–	–	–	–	–
TU 50	[22] 220	[30] 300	[38] 380	[46] 460	[54] 540	[62] 620	[70] 700	–	–	–	–
TU 60	[29] 290	[39] 390	[49] 490	[59] 590	[69] 690	[79] 790	[99] 990	[119]1 190	–	–	–
TU 86	[49] 490	[59] 590	[69] 690	[79] 790	[89] 890	[99] 990	[109]1 090	[119]1 190	[139]1 390	[159]1 590	–
TU100	[101]1 010	[116]1 160	[131]1 310	[146]1 460	–	–	–	–	–	–	–
TU130	[101]1 010	[116]1 160	[131]1 310	[146]1 460	[161]1 610	–	–	–	–	–	–

Remark: For stroke lengths, please see the dimension tables shown in pages of Ⅱ-69 or later.

Table 2.2 Length of track rail (motor folding back specification) unit: mm

Model and size	[Identification] of the length and dimensions of the track rail								
TU 40	[14] 140	[20] 200	[26] 260	[32] 320	[38] 380	–	–	–	
TU 50	[18] 180	[26] 260	[34] 340	[42] 420	[50] 500	[58] 580	[66] 660	–	
TU 60	[24] 244	[34] 344	[44] 444	[54] 544	[64] 644	[74] 744	–	–	
TU 86	[44] 442	[54] 542	[64] 642	[74] 742	[84] 842	[94] 942	[104]1 042	[114]1 142	

Remark: For stroke length, please see the dimension tables shown in pages of Ⅱ-81 or later.

1N=0.102kgf=0.2248lbs.
1mm=0.03937inch

5 Designation of motor attachment

AT100 : Motor inline specification Without motor attachment
AT101 to AT125 : Motor inline specification With motor attachment
AR100 : Motor folding back specification Without motor attachment
AR101 to AR110 : Motor folding back specification With motor attachment

Application of motor folding back specification is shown in Table 3. To specify the motor attachment, select it from the list of Table 6.1 and Table 6.2.

- Motor should be prepared by customer.
- Please specify motor folding back specification and motor attachment applicable to motor for use.
- If motor inline specification with motor attachment is specified, the main body is shipped with a coupling indicated in the Table 7 mounted. However, the final position adjustment should be made by customer since it is only temporarily fixed. For a product without motor attachment (AT100), no coupling is attached.
- If motor folding back specification with motor attachment is specified, "housing applicable to the specified motor, pulley (on motor side and ball screw side), cover, motor bracket, belt and bolts necessary for assembly" are supplied. Motor mounting bolts should be prepared by customer.

Table 3 Application of motor folding back specification

Model and size	With motor attachment		Without motor attachment
	AC servomotor	Stepper motor	
TU 25	–	–	–
TU 30	–	–	–
TU 40	○	○	○
TU 50	○	○	○
TU 60	○	–	○
TU 86	○	–	○
TU100	–	–	–
TU130	–	–	–

6 Ball screw type

No symbol: Rolled screw
G : Ground screw
N : Without ball screw
From among various types of ball screws shown in Table 4, select your desired one.

When specifying N
- For the entry of section 5, specify AT100 or AR100, and for the entry of section 7, specify "No symbol".
- For the entry of section 10, select "Without sensor" (by specifying 0).
- In the entry of section 9, you cannot specify "With bellows".

7 Ball screw lead

From among ball screw leads applicable to the sizes shown in Table 4, select your desired one.

Table 4 Application of ball screw lead

Model and size	Ball screw type	Ball screw lead mm					
		4	5	8	10	20	25
TU 25	Ground screw	○	–	–	–	–	–
TU 30	Ground screw	–	○	–	–	–	–
TU 40	Rolled screw	○	–	○	–	–	–
	Ground screw	○	–	○	–	–	–
TU 50	Rolled screw	–	○	–	○	–	–
	Ground screw	–	○	–	○	–	–
TU 60	Rolled screw	–	○	–	○	–	–
	Ground screw	–	○(1)	–	○(1)	○(1)	–
TU 86	Rolled screw	–	–	–	○(2)	○(2)	–
	Ground screw	–	–	–	○(2)	○	–
TU100	Ground screw	–	–	–	–	○	–
TU130	Ground screw	–	–	–	–	–	○

Notes (1) This is not applied to track rail lengths of 990mm and 1,190mm.
(2) This is not applied to track rail lengths of 1,390mm and 1,590mm.

8 Number of slide table

S: One unit
C: Two units

9 Cover specification

0 : Without cover
C: With bridge cover (applied to TU···FC, TU···F, and TU···FG)
J : With bellows (applied to TU60S and TU86S)

- When specifying "With bellows (J)", select 1 piece (by specifying S) for the entry of section 8.
- "With bellows" type is not provided for TU60 with track rail lengths of 990 and 1,190mm and TU86 with track rail lengths of 1,390 and 1,590mm.
- "With bridge cover" type is not provided for TU60 with track rail lengths of 1,190mm and TU86 with track rail lengths of 1,590mm.

10 Specification of sensor

0: Without a sensor, without a sensor rail
2: Two sensors (limit), with a sensor rail
3: Three sensors (limit and pre-origin), with a sensor rail
4: Four sensors (limit, pre-origin, and origin), with a sensor rail
9: Without a sensor, with a sensor rail

11 Specification of surface treatment

No symbol: Not treated
R : Black chrome surface treatment 1
Black chrome surface treatment is applied on the surfaces of a slide table and track rail.
L : Black chrome surface treatment 2
In addition to the black chrome surface treatment 1, this treatment is applied on the ball screw shaft and nut.

12 Specification of C-Lube

No symbol: No C-Lube
Q : Table with C-Lube

A C-Lube is mounted on the slide table and the end face of a nut of ball screw. The C-Lube is a lubrication part with much lubricant oil impregnated in the consecutive porous resin. Sliding or moving along a smooth surface with contact on the track rail and the raceway surface of the ball screw causes the lubricant oil within the plate to continue to seep on the raceway surface, thus reducing the number of hours for maintenance caused by the extension of lubrication interval. This is an effective countermeasure for the attrition of grease at the location difficult to be lubricated.

- When specifying Q, for the entry of section 6, select ground screw (by specifying G) or without ball screw (by specifying N).

Table 5 Application of C-Lube

Model and size	Rolled screw	Ground screw	Without ball screw
TU 25	–	–	–
TU 30	–	–	–
TU 40	–	○	○
TU 50	–	○	○
TU 60	–	○	○
TU 86(1)	–	○	○
TU100	–	○	○
TU130	–	○	○

Note (1) For the track rail lengths of 1,390mm and 1,590mm in TU86, please contact IKO.

1N=0.102kgf=0.2248lbs.
1mm=0.03937inch

Table 6.1 Application of motor attachment (motor inline specification)

Models of motor to be used					Flange size mm	Motor attachment							
Type	Manufacturer	Series	Model	Rated output W		TU25	TU30	TU40	TU50	TU60	TU86	TU100	TU130
AC servomotor	YASKAWA ELECTRIC CORPORATION	Σ-V	SGMMV-A2A	20	□25	AT101	AT101	–	–	–	–	–	–
			SGMMV-A3A	30		AT101	AT101	–	–	–	–	–	–
			SGMJV-A5A	50	□40	–	–	AT102	AT102	–	–	–	–
			SGMAV-A5A			–	–	AT102	AT102	–	–	–	–
			SGMJV-01A	100		–	–	AT102	AT102	AT103	–	–	–
			SGMAV-01A			–	–	AT102	AT102	AT103	–	–	–
			SGMAV-C2A	150		–	–	–	–	AT103	–	–	–
			SGMJV-02A	200	□60	–	–	–	–	AT104	AT105	–	–
			SGMAV-02A			–	–	–	–	AT104	AT105	–	–
			SGMJV-04A	400		–	–	–	–	–	AT106	AT107	–
			SGMAV-04A			–	–	–	–	–	AT106	AT107	–
			SGMAV-06A	550		–	–	–	–	–	AT106	AT107	–
			SGMJV-08A	750	□80	–	–	–	–	–	–	–	AT108
			SGMAV-08A			–	–	–	–	–	–	–	AT108
	Mitsubishi Electric Corporation	J4	HG-AK0236	20	□25	AT101	AT101	–	–	–	–	–	–
			HG-AK0336	30		AT101	AT101	–	–	–	–	–	–
			HG-MR053	50	□40	–	–	AT102	AT102	–	–	–	–
			HG-KR053			–	–	AT102	AT102	–	–	–	–
			HG-MR13	100		–	–	AT102	AT102	AT103	–	–	–
			HG-KR13			–	–	AT102	AT102	AT103	–	–	–
			HG-MR23	200	□60	–	–	–	–	AT104	AT105	–	–
			HG-KR23			–	–	–	–	AT104	AT105	–	–
			HG-MR43	400		–	–	–	–	–	AT106	AT107	–
			HG-KR43			–	–	–	–	–	AT106	AT107	–
			HG-MR73	750	□80	–	–	–	–	–	–	–	AT108
			HG-KR73			–	–	–	–	–	–	–	AT108
	Panasonic Corporation	MINAS A5	MSMD5A	50	□38	–	–	AT110	AT110	–	–	–	–
			MSME5A			–	–	AT110	AT110	–	–	–	–
			MSMD01	100		–	–	AT110	AT110	AT111	–	–	–
			MSME01			–	–	AT110	AT110	AT111	–	–	–
			MSMD02	200	□60	–	–	–	–	AT112	AT113	–	–
			MSME02			–	–	–	–	AT112	AT113	–	–
			MSMD04	400		–	–	–	–	–	AT114	AT115	–
			MSME04			–	–	–	–	–	AT114	AT115	–
			MSMD08	750	□80	–	–	–	–	–	–	–	AT116
			MSME08			–	–	–	–	–	–	–	AT116
	Hitachi Industrial Equipment Systems Co., Ltd	AD	ADMA-R5L	50	□40	–	–	AT102	AT102	–	–	–	–
			ADMA-01L	100		–	–	AT102	AT102	AT103	–	–	–
			ADMA-02L	200	□60	–	–	–	–	AT104	AT105	–	–
			ADMA-04L	400		–	–	–	–	–	AT106	AT107	–
			ADMA-08L	750	□75	–	–	–	–	–	–	–	AT108
Stepper motor	ORIENTAL MOTOR Co., Ltd.	α step	ARM46		□42	–	–	AT117	AT117	–	–	–	–
			ARM66		□60	–	–	–	–	AT118	AT119	–	–
			ARM69		□60	–	–	–	–	AT118	AT119	–	–
			ARM98		□85	–	–	–	–	–	–	AT120	AT121
			ARM911		□85	–	–	–	–	–	–	AT120	AT121
		RKS CRK	CRK52		□28	AT125	AT125	–	–	–	–	–	–
			CRK54		□42	–	–	AT122	AT122	–	–	–	–
			CRK56 (1)		□60	–	–	–	–	AT123	AT124	–	–
			RKS59		□85	–	–	–	–	–	–	AT120	AT121

Note (1) Applicable to the outer diameter ϕ8 of motor output shaft.
Remark: For detailed motor specifications, please see respective motor manufacturer's catalog.

Table 6.2 Application of NEMA motor attachment (motor inline specification)

Motor to be used					Flange size inch	Motor attachment							
Type	Manufacturer	Series	Model	Rated output W		TU25	TU30	TU40	TU50	TU60	TU86	TU100	TU130
AC servo motor	Allen-Bradley	TLY (metric)	TLY-A110(AA type)	41W	□40			AT102	AT102	AT103			
			TLY-A120(AA type)	86W	□40			AT102	AT102	AT103			
			TLY-A130(AA type)	140W	□40			AT102	AT102	AT103			
			TLY-A220(AA type)	350W	□60					AT104 (4-a)	AT105 (4-a)	AT107 (4-b)	AT107 (4-c)
			TLY-A230(AA type)	440W	□60					AT104 (4-a)	AT105 (4-a)	AT107 (4-b)	AT107 (4-c)
			TLY-A2530(AA type)	690W	□80							AT108 (4-b)	AT108 (4-e)
			TLY-A2540(AA type)	860W	□80							AT108 (4-b)	AT108 (4-e)
		TLY (NEMA)	TLY-A120(AN type)	86W	□42			TAE9043-ATE140 (1)					
			TLY-A130(AN type)	140W	□42			TAE9043-ATE140 (1)					
			TLY-A220(AN type)	350W	□56.4					TAE9017-ATE139 (1)	TAE9017-ATE129 (1)		
			TLY-A230(AN type)	440W	□56.4					TAE9017-ATE139 (1)	TAE9017-ATE129 (1)		
			TLY-A2530(AN type)	690W	□86						TAE9047-ATE130 (1)	TAE9047-ATE062 (1)	
			TLY-A2540(AN type)	860W	□86						TAE9047-ATE130 (1)	TAE9047-ATE062 (1)	
Servo or Stepper	(NEMA11C)					AT125 (2) (3)		–	–	–	–	–	–
	NEMA17C					TAE9065-ATE063 (1) (2)		AT122 (2) (3)		–	–	–	–
	NEMA23D					–	–	TAE9059-ATE054 (1) (2)		TAE9014-ATE094 (1) (2)	TAE9017-ATE093 (1) (2)	–	–
						–	–	–	–	TAE9014-ATE41 (1) (2)	TAE9017-ATE058 (1) (2)	–	–
	NEMA34D					–	–	–	–	–	TAE9056-ATE45 (1) (2)	TAE9047-ATE062 (1) (2)	
	NEMA42D					–	–	–	–	–	–	TAE9047-ATE060 (1) (2)	

Note (1) The TAE part numbers are the part number of motor attachment component sold separately. In the TU part number, please choose the motor attachment code AT100. No Coupling is included. It is required to consider customer's operation patterns for these motor attachment.
(2) Please confirm the length and the diameter of the motor shaft etc., and check the usability of the motor attachment with your motor beforehand.
(3) The appended coupling may not be used depending on the motor's specification, while these AT part number motor attachments will be delivered with the particular coupling as standard.
(4-a) (4-b) (4-c) (4-d) (4-e)
The appended coupling as standard will not be used. It is required to change the delivered coupling.
Please refer to Table 6.3.
Remark: For detailed motor specifications, please see respective motor manufacturer's catalog.

Table 6.3 Recommended coupling of IKO motor attachment for Allen Bradley

Note	Motor Attachment	Coupling	Motor Shaft Diameter	Recomennded Coupling
4-a	AT104/ AT105	Appended	ϕ12	UA-30C-8×12
4-b	AT107(TU100)	Appended	ϕ12	UA-40C-12×12
4-c	AT107(TU130)	Appended	ϕ15	UA-40C-12×15
4-d	AT108(TU100)	Appended	ϕ16	UA-40C-12×16
4-e	AT108(TU130)	Appended	ϕ16	UA-40C-15×16

1N=0.102kgf=0.2248lbs.
1mm=0.03937inch

Table 6.4 Application of motor attachment (motor folding back specification)

Models of motor to be used					Flange size mm	Motor attachment			
Type	Manufacturer	Series	Model	Rated output W		TU40	TU50	TU60	TU86
AC servo motor	YASKAWA ELECTRIC CORPORATION	Σ-V	SGMJV-A5A	50	□40	AR101	AR101	–	–
			SGMAV-A5A			AR101	AR101	–	–
			SGMJV-01A	100		AR101	AR101	AR102	–
			SGMAV-01A			AR101	AR101	AR102	–
			SGMAV-C2A	150		–	–	AR102	–
			SGMJV-02A	200	□60	–	–	AR103	AR104
			SGMAV-02A			–	–	AR103	AR104
	Mitsubishi Electric Corporation	J4	HG-MR053	50	□40	AR101	AR101	–	–
			HG-KR053			AR101	AR101	–	–
			HG-MR13	100		AR101	AR101	AR102	–
			HG-KR13			AR101	AR101	AR102	–
			HG-MR23	200	□60	–	–	AR103	AR104
			HG-KR23			–	–	AR103	AR104
	Panasonic Corporation	MINAS A5	MSMD5A	50	□38	AR105	AR105	–	–
			MSME5A			AR105	AR105	–	–
			MSMD01	100		AR105	AR105	AR106	–
			MSME01			AR105	AR105	AR106	–
			MSMD02	200	□60	–	–	AR107	AR108
			MSME02			–	–	AR107	AR108
	Hitachi Industrial Equipment Systems Co., Ltd	AD	ADMA-R5L	50	□40	AR101	AR101	–	–
			ADMA-01L	100		AR101	AR101	AR102	–
			ADMA-02L	200	□60	–	–	AR103	AR104
Stepper motor	ORIENTAL MOTOR Co., Ltd.	α step	ARM46		□42	AR109	AR109	–	–
		CRK	CRK54		□42	AR110	AR110	–	–

Remark: For detailed motor specifications, please see respective motor manufacturers' catalog.

Table 7 Coupling models (motor inline specification)

Motor attachment	Coupling models	Manufacturer	Coupling inertia J_c $\times 10^{-5}$kg・m^2
AT101	UA-15C- 5× 5	Sakai Manufacturing Co., Ltd	0.024
AT102	UA-20C- 5× 8	Sakai Manufacturing Co., Ltd	0.086
AT103	UA-25C- 8× 8	Sakai Manufacturing Co., Ltd	0.29
AT104	UA-30C- 8×14	Sakai Manufacturing Co., Ltd	0.603
AT105	UA-30C- 8×14	Sakai Manufacturing Co., Ltd	0.603
AT106	UA-35C- 8×14	Sakai Manufacturing Co., Ltd	1.34
AT107	UA-40C-12×14	Sakai Manufacturing Co., Ltd	2.61
AT108	UA-40C-15×19	Sakai Manufacturing Co., Ltd	2.61
AT109	UA-15C- 5× 6	Sakai Manufacturing Co., Ltd	0.024
AT110	UA-20C- 5× 8	Sakai Manufacturing Co., Ltd	0.086
AT111	UA-25C- 8× 8	Sakai Manufacturing Co., Ltd	0.29
AT112	UA-30C- 8×11	Sakai Manufacturing Co., Ltd	0.603
AT113	UA-30C- 8×11	Sakai Manufacturing Co., Ltd	0.603
AT114	UA-35C- 8×14	Sakai Manufacturing Co., Ltd	1.34
AT115	UA-40C-12×14	Sakai Manufacturing Co., Ltd	2.61
AT116	UA-40C-15×19	Sakai Manufacturing Co., Ltd	2.61
AT117	MSTS-16C- 5× 6	Nabeya Bi-tech Kaisha	0.090
AT118	MSTS-25C- 8×10	Nabeya Bi-tech Kaisha	0.710
AT119	MSTS-25C- 8×10	Nabeya Bi-tech Kaisha	0.710
AT120	MSTS-40C-12×14	Nabeya Bi-tech Kaisha	9.0
AT121	MSTS-40C-14×15	Nabeya Bi-tech Kaisha	9.0
AT122	MSTS-16C- 5× 5	Nabeya Bi-tech Kaisha	0.090
AT123	MSTS-25C- 8× 8	Nabeya Bi-tech Kaisha	0.710
AT124	MSTS-25C- 8× 8	Nabeya Bi-tech Kaisha	0.710
AT125	MSTS-12C- 5× 5	Nabeya Bi-tech Kaisha	0.022
TAE9017-ATE139	XGT-25CS- 8×12.7 (Customized)	Nabeya Bi-tech Kaisha	0.250
TAE9017-ATE129	XGS-30C- 8×12.7 (Customized)	Nabeya Bi-tech Kaisha	0.550
TAE9047-ATE130	XGS-34C- 8×15.875(Customized)	Nabeya Bi-tech Kaisha	1.000
TAE9043-ATE140	MSTS-16C- 5×6.35	Nabeya Bi-tech Kaisha	0.090
TAE9047-ATE062（TU100）	XGT-34CS-15.875×12 (Customized)	Nabeya Bi-tech Kaisha	1.000
TAE9047-ATE062（TU130）	XGT-34CS-15.875×15 (Customized)	Nabeya Bi-tech Kaisha	1.000

Remark: For detailed coupling specification, please see respective manufacturer's catalog.

Specifications

Table 8.1 TU accuracy (rolled screw) unit: mm

Length of track rail		Positioning repeatability	Parallelism in table motion B	Backlash (1)
Above	Below			
–	500	±0.025 (±0.040)	0.015	0.050
500	800		0.020	
800	1 200		0.025	

Note(1) This does not apply to table of motor folding back specification.
Remark: The positioning repeatability values in ( ) are reference values provided that the timing belt tension is properly adjusted in motor folding back specification table.

Table 8.2 TU accuracy (ground screw) unit: mm

Length of track rail		Positioning repeatability		Positioning accuracy (1)		Parallelism in table motion B		Backlash (1)
Above	Below	Short table	Standard table Long table	Short table	Standard table Long table	Short table	Standard table Long table	
–	400(350)	±0.004 (±0.020)	±0.002 (±0.020)	0.030	0.020	0.015	0.008	0.003
400(350)	500(500)						0.010	
500(500)	600(550)			0.035	0.025	0.020		
600(550)	700(700)						0.012	
700(700)	800(800)			0.040	0.030			
800(800)	900(900)					0.025	0.014	
900(900)	1 000(1 000)			0.045	0.035			
1 000(1 000)	1 100(1 100)						0.016	
1 100(1 100)	1 200			0.050	0.040			
1 200	1 400			–		–	0.030	
1 400	1 500			–	0.045	–		
1 500	1 610			–	0.050	–		

Note (1) This does not apply to table of motor folding back specification.
Remark: The positioning repeatability values in ( ) are reference values provided that the timing belt tension is properly adjusted in motor folding back specification table.

1N=0.102kgf=0.2248lbs.
1mm=0.03937inch

Table 9.1 Maximum speed (AC servomotor)

Motor type	Model and size	Length of track rail mm	Maximum speed mm/s					
			Lead 4mm	Lead 5mm	Lead 8mm	Lead 10mm	Lead 20mm	Lead 25mm
AC servo motor	TU 25	200 or less	400	–	–	–	–	–
	TU 30	340 or less	–	500	–	–	–	–
	TU 40	–	400 (390)	–	800 (790)	–	–	–
	TU 50	540 or less	–	500 (390)	–	1 000 (780)	–	–
		620	–	370 (350)	–	750 (710)	–	–
		700	–	280 (270)	–	560 (540)	–	–
	TU 60	590 or less	–	470 (330)	–	930 (660)	1 860	–
		690	–	380 (330)	–	780 (660)	1 620	–
		790	–	270 (270)	–	560 (560)	1 170	–
		990	–	(160)	–	(330)	–	–
		1 190	–	(110)	–	(210)	–	–
	TU 86	690 or less	–	–	–	750 (530)	1 480 (1 050)	–
		790	–	–	–	700 (530)	1 410 (1 050)	–
		890	–	–	–	530 (530)	1 060 (1 050)	–
		990	–	–	–	410 (410)	830 (830)	–
		1 090	–	–	–	330 (330)	670 (670)	–
		1 190	–	–	–	270 (270)	550 (550)	–
		1 390	–	–	–	–	530	–
		1 590	–	–	–	–	390	–
	TU100	1 010	–	–	–	–	1 110	–
		1 160	–	–	–	–	990	–
		1 310	–	–	–	–	730	–
		1 460	–	–	–	–	560	–
	TU130	1 010	–	–	–	–	–	1 110
		1 160	–	–	–	–	–	1 110
		1 310	–	–	–	–	–	1 110
		1 460	–	–	–	–	–	930
		1 610	–	–	–	–	–	730

Remark 1. The value in ( ) is applicable to rolled screws.
2. To measure the practical maximum speed, it is required to consider operation patterns based on the motor to be used and load conditions.

Table 9.2 Maximum speed (stepper motor)

Motor type	Model and size	Length of track rail mm	Number of revolutions of motor min^{-1}	Maximum speed mm/s					
				Lead 4mm	Lead 5mm	Lead 8mm	Lead 10mm	Lead 20mm	Lead 25mm
Stepper motor	TU 25	200 or less	1 800	120	–	–	–	–	–
	TU 30	340 or less	1 800	–	150	–	–	–	–
	TU 40	–	1 800	120	–	240	–	–	–
	TU 50	–	1 800	–	150	–	300	–	–
	TU 60	790 or less	1 800	–	–	–	–	600	–
		990 or less	1 800	–	150	–	300	–	–
		1 190	1 290	–	108	–	215	–	–
	TU 86	990 or less	1 800	–	–	–	300	600	–
		1 090	1 770	–	–	–	295	590	–
		1 190	1 460	–	–	–	243	487	–
		1 390	1 610	–	–	–	–	537	–
		1 590	1 200	–	–	–	–	400	–
	TU100	1 160 or less	1 800	–	–	–	–	600	–
		1 310	1 780	–	–	–	–	593	–
		1 460	1 400	–	–	–	–	467	–
	TU130	1 310 or less	1 800	–	–	–	–	–	750
		1 460	1 720	–	–	–	–	–	717
		1 610	1 390	–	–	–	–	–	579

Remark: To measure the practical maximum speed, it is required to consider operation patterns based on the motor to be used and load conditions.

Table 10 Maximum carrying mass

Model and size	Ball screw type	Ball screw lead mm	Length of slide table	Maximum carrying mass kg	
				Horizontal	Vertical
TU 25	Ground screw	4	Standard	11	4.8
TU 30	Ground screw	5	Standard	15	5
TU 40	Ground screw	4	Short	24	11
			Standard	39	11
			Long	59	11
		8	Short	24	7
			Standard	39	7
			Long	46	7
	Rolled screw	4	Short	24	8
			Standard	39	8
			Long	59	8
		8	Short	24	5
			Standard	32	4.8
			Long	32	4.8
TU 50	Ground screw	5	Short	35	13
			Standard	64	13
			Long	100	13
		10	Short	35	8
			Standard	44	8
			Long	43	8
	Rolled screw	5	Short	35	11
			Standard	64	11
			Long	100	11
		10	Short	35	9
			Standard	47	8
			Long	47	8
TU 60	Ground screw	5	Short	48	16
			Standard	88	15
			Long	146	15
		10	Short	48	11
			Standard	58	10
			Long	58	10
		20	Short	29	10
			Standard	28	9
			Long	28	9
	Rolled screw	5	Short	48	14
			Standard	88	13
			Long	143	13
		10	Short	46	8
			Standard	45	8
			Long	45	7
TU 86	Ground screw	10	Short	97	29
			Standard	154	28
			Long	153	27
		20	Short	69	21
			Standard	75	21
			Long	75	21
	Rolled screw	10	Short	97	23
			Standard	124	22
			Long	123	21
		20	Short	49	16
			Standard	47	15
			Long	47	14
TU100	Ground screw	20	Standard	81	27
TU130	Ground screw	25	Standard	92	34

Remark: The value is for one slide table.

1N=0.102kgf=0.2248lbs.
1mm=0.03937inch

Table 11 Load rating of linear motion rolling guide

Model and size	Length of slide table	Basic dynamic load rating C N	Basic static load rating C_0 N	Static moment rating (1) N·m		
				T_0	T_X	T_Y
TU 25	Standard	1 770	2 840	20.3(40.6)	10.1(53.7)	8.4(45.0)
TU 30	Standard	2 280	3 810	34.9(69.8)	16.9(87.5)	14.2(73.4)
TU 40	Short	6 050	6 110	83.8(167.6)	22.8(185)	22.8(185)
	Standard	8 410	9 780	134 (268)	53.0(351)	53.0(351)
	Long	11 200	14 700	201 (402)	113 (649)	113 (649)
TU 50	Short	8 930	8 800	156 (312)	39.5(315)	39.5(315)
	Standard	13 500	15 800	280 (560)	114 (711)	114 (711)
	Long	18 400	24 600	436 (872)	260 (1 420)	260 (1 420)
TU 60	Short	12 400	12 000	236 (472)	62.7(486)	62.7(486)
	Standard	18 800	21 600	425 (850)	181 (1 150)	181 (1 150)
	Long	26 800	35 900	708 (1 416)	472 (2 470)	472 (2 470)
TU 86	Short	24 100	23 800	677 (1 354)	183 (1 280)	183 (1 280)
	Standard	41 400	51 500	1 470 (2 940)	764 (4 120)	764 (4 120)
	Long	49 900	67 300	1 920 (3 840)	1 270 (6 290)	1 270 (6 290)
TU100	Standard	54 600	68 500	2 230 (4 460)	1 210 (6 460)	1 210 (6 460)
TU130	Standard	70 300	88 800	3 920 (7 840)	1 830 (9 630)	1 830 (9 630)

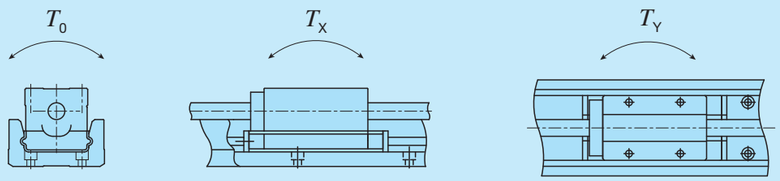

Note (1) In directions indicated in the above figures, the value in ( ) is for two slide tables in close contact.

Table 12.1 Specifications of ball screw 1

Model and size	Ball screw type	Lead mm	Shaft dia. mm	Axial clearance mm	Basic dynamic load rating C N	Basic static load rating C_0 N
TU 25	Ground screw	4	6	0.005 or less	950	1 630
TU 30	Ground screw	5	8	0.005 or less	1 080	2 160
TU 40	Rolled screw	4	8	0.05 or less	1 600	2 800
		8			1 000	1 600
	Ground screw	4	8	0.005 or less	2 290	3 575
		8			1 450	2 155
TU 50	Rolled screw	5	10	0.05 or less	2 300	4 800
		10			1 850	3 200
	Ground screw	5	10	0.005 or less	2 730	4 410
		10			1 720	2 745
TU 60	Rolled screw	5	12	0.05 or less	2 800	5 000
		10			1 800	3 200
	Ground screw (1)	5	12	0.005 or less	3 230	6 320
		10			2 300	3 920
		20			2 300	3 920
TU 86	Rolled screw (2)	10	15	0.05 or less	4 900	9 100
		20			3 900	5 050
	Ground screw (2)	10	15	0.005 or less	6 080	12 500
		20			4 510	7 840
	Ground screw (3)	20	20	0.005 or less	6 620	12 600
TU100	Ground screw	20	20	0.005 or less	6 620	12 600
TU130	Ground screw	25	25	0.005 or less	9 700	19 600

Notes (1) This is not applied to track rail lengths of 990mm and 1,190mm.
(2) This is not applied to track rail lengths of 1,390mm and 1,590mm.
(3) This applies to track rail lengths of 1,390mm and 1,590mm.

1N=0.102kgf=0.2248lbs.
1mm=0.03937inch

Table 12.2 Specifications of ball screw 2

unit: mm

Model and size	Length of track rail	Ball screw type		Shaft dia.	Overall length
TU 25	130	Ground	–	6	146
	165	Ground	–		181
	200	Ground	–		216
TU 30	140	Ground	–	8	156
	180	Ground	–		196
	220	Ground	–		236
	260	Ground	–		276
	300	Ground	–		316
	340	Ground	–		356
TU 40	180	Ground	Rolled	8	158
	240	Ground	Rolled		218
	300	Ground	Rolled		278
	360	Ground	Rolled		338
	420	Ground	Rolled		398
	140	Ground	Rolled		158
	200	Ground	Rolled		218
	260	Ground	Rolled		278
	320	Ground	Rolled		338
	380	Ground	Rolled		398
TU 50	220	Ground	Rolled	10	198
	300	Ground	Rolled		278
	380	Ground	Rolled		358
	460	Ground	Rolled		438
	540	Ground	Rolled		518
	620	Ground	Rolled		598
	700	Ground	Rolled		678
	180	Ground	Rolled		198
	260	Ground	Rolled		278
	340	Ground	Rolled		358
	420	Ground	Rolled		438
	500	Ground	Rolled		518
	580	Ground	Rolled		598
	660	Ground	Rolled		678
TU 60	290	Ground	Rolled	12	263
	390	Ground	Rolled		363
	490	Ground	Rolled		463
	590	Ground	Rolled		563
	690	Ground	Rolled		663
	790	Ground	Rolled		763
	990	–	Rolled		963
	1 190	–	Rolled		1 163
	244	Ground	Rolled		263
	344	Ground	Rolled		363
	444	Ground	Rolled		463
	544	Ground	Rolled		563
	644	Ground	Rolled		663
	744	Ground	Rolled		763
TU 86	490	Ground	Rolled	15	461
	590	Ground	Rolled		561
	690	Ground	Rolled		661
	790	Ground	Rolled		761
	890	Ground	Rolled		861
	990	Ground	Rolled		961
	1 090	Ground	Rolled		1 061
	1 190	Ground	Rolled		1 161
	1 390	Ground	–	20	1 361
	1 590	Ground	–		1 561
	442	Ground	Rolled	15	461
	542	Ground	Rolled		561
	642	Ground	Rolled		661
	742	Ground	Rolled		761
	842	Ground	Rolled		861
	942	Ground	Rolled		961
	1 042	Ground	Rolled		1 061
	1 142	Ground	Rolled		1 161
TU100	1 010	Ground	–	20	972
	1 160	Ground	–		1 122
	1 310	Ground	–		1 272
	1 460	Ground	–		1 422
TU130	1 010	Ground	–	25	972
	1 160	Ground	–		1 122
	1 310	Ground	–		1 272
	1 460	Ground	–		1 422
	1 610	Ground	–		1 572

Table 13 Moment of inertia of sectional area of track rails

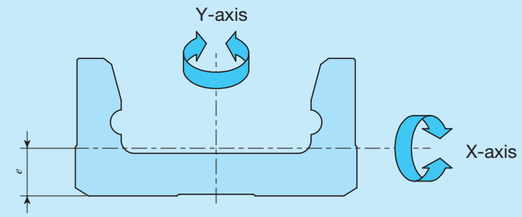

Model and size	Moment of inertia of sectional area mm⁴		Center of gravity e mm
	I_x	I_y	
TU 25	3.7×10^2	7.5×10^3	2.6
TU 30	9.3×10^2	1.7×10^4	3.3
TU 40	1.0×10^4	6.8×10^4	6.6
TU 50	2.8×10^4	1.7×10^5	8.7
TU 60	6.4×10^4	3.8×10^5	10.9
TU 86	2.4×10^5	1.6×10^6	14.6
TU100	5.9×10^5	3.3×10^6	18.8
TU130	1.4×10^6	8.8×10^6	23.0

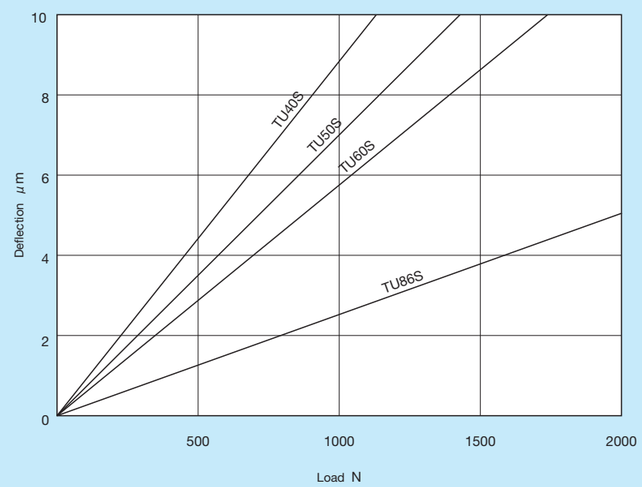

Fig. 1 Deflection vs. Downward load

1N=0.102kgf=0.2248lbs.
1mm=0.03937inch

Table 14.1 Table inertia and starting torque

Model and size	Length of track rail mm	Table inertia J_T ×10⁻⁵kg·m² Standard table Lead 4mm	Starting torque T_S(2) N·m Ground screw
TU25	130	0.018	0.01
	165	0.021	
	200	0.024	

Model and size	Length of track rail mm	Table inertia J_T (3) ×10⁻⁵kg·m² Standard table Lead 5mm	Starting torque T_S(2) N·m Ground screw
TU30	140	0.057	0.015
	180	0.069	
	220	0.082	
	260	0.095	
	300	0.107	
	340	0.120	

Model and size	Length of track rail(1) mm	Table inertia J_T (3) ×10⁻⁵kg·m² Short table Lead 4mm	Short table Lead 8mm	Standard table Lead 4mm	Standard table Lead 8mm	Long table Lead 4mm	Long table Lead 8mm	Starting torque T_S(2) N·m Rolled screw Lead 4mm	Rolled screw Lead 8mm	Ground screw Lead 4mm	Ground screw Lead 8mm
TU40	180(140)	0.05	0.07	0.06	0.09	–	–	0.03	0.04	0.03 (0.04)	0.04 (0.05)
	240(200)	0.07	0.09	0.08	0.11	0.08	0.12				
	300(260)	0.09	0.11	0.10	0.12	0.10	0.14				
	360(320)	0.11	0.13	0.12	0.14	0.12	0.16				
	420(380)	0.13	0.15	0.13	0.16	0.14	0.18				

Model and size	Length of track rail(1) mm	Table inertia J_T (3) ×10⁻⁵kg·m² Short table Lead 5mm	Short table Lead 10mm	Standard table Lead 5mm	Standard table Lead 10mm	Long table Lead 5mm	Long table Lead 10mm	Starting torque T_S(2) N·m Rolled screw Lead 5mm	Rolled screw Lead 10mm	Ground screw Lead 5mm	Ground screw Lead 10mm
TU50	220(180)	0.17	0.21	0.18	0.27	–	–	0.04	0.05	0.04 (0.05)	0.05 (0.06)
	300(260)	0.23	0.28	0.24	0.33	0.26	0.40				
	380(340)	0.29	0.34	0.30	0.39	0.32	0.46				
	460(420)	0.35	0.40	0.36	0.45	0.38	0.53				
	540(500)	0.41	0.46	0.43	0.51	0.44	0.59				
	620(580)	0.47	0.52	0.49	0.57	0.51	0.65				
	700(660)	0.54	0.58	0.55	0.63	0.57	0.71				

Model and size	Length of track rail(1) mm	Table inertia J_T (3) ×10⁻⁵kg·m² Short table Lead 5mm	Short table Lead 10mm	Short table Lead 20mm	Standard table Lead 5mm	Standard table Lead 10mm	Standard table Lead 20mm	Long table Lead 5mm	Long table Lead 10mm	Long table Lead 20mm	Starting torque T_S(2) N·m Rolled screw Lead 5mm	Rolled screw Lead 10mm	Ground screw Lead 5mm 10mm	Ground screw Lead 20mm
TU60	290(244)	0.45	0.53	1.03	0.47	0.61	1.43	0.49	0.71	1.94	0.08		0.08 (0.09)	0.10 (0.12)
	390(344)	0.60	0.69	1.19	0.62	0.77	1.59	0.65	0.87	2.10				
	490(444)	0.76	0.85	1.34	0.78	0.93	1.75	0.81	1.0	2.26				
	590(544)	0.92	1.0	1.50	0.94	1.1	1.90	0.97	1.2	2.41				
	690(644)	1.1	1.2	1.66	1.1	1.2	2.06	1.1	1.3	2.57				
	790(744)	1.2	1.3	1.82	1.3	1.4	2.22	1.3	1.5	2.73				
	990	1.6	1.7	–	1.6	1.7	–	1.6	1.8	–	0.10		–	
	1 190	1.9	2.0	–	1.9	2.1	–	1.9	2.2	–				

Notes (1) The value in ( ) represents track rail length of motor folding back specification.
(2) When two units of slide table are used, it is about 1.5 times as long as that of one unit, and when table of motor folding back specification is used, it is about twice. The value in ( ) represents starting torque of C-Lube specification.
(3) For motor folding back specification, please add the following value to the value in the table.
TU40 and TU50: 0.17×10⁻⁵kg·m², TU60: 0.86×10⁻⁵kg·m²

Table 14.2 Table inertia and starting torque

Model and size	Length of track rail (1) mm	Table inertia J_T (3) ×10⁻⁵kg·m² Short table Lead 10mm	Short table Lead 20mm	Standard table Lead 10mm	Standard table Lead 20mm	Long table Lead 10mm	Long table Lead 20mm	Starting torque T_S(2) N·m Rolled screw Lead 10mm	Rolled screw Lead 20mm	Ground screw Lead 10mm	Ground screw Lead 20mm
TU 86	490(442)	2.1	2.9	2.3	3.9	2.4	4.4	0.10	0.16	0.10 (0.12)	0.16 (0.18)
	590(542)	2.4	3.2	2.7	4.3	2.8	4.8				
	690(642)	2.8	3.6	3.1	4.6	3.2	5.1				
	790(742)	3.2	4.0	3.5	5.0	3.6	5.5				
	890(842)	3.6	4.4	3.9	5.4	4.0	5.9				
	990(942)	4.0	4.8	4.2	5.8	4.4	6.3				
	1 090(1 042)	4.4	5.2	4.6	6.2	4.8	6.7				
	1 190(1 142)	4.8	5.6	5.0	6.6	5.1	7.1				
	1 390	–	18	–	19	–	19	–		–	0.30
	1 590	–	20	–	21	–	22				

Model and size	Length of track rail mm	Table inertia J_T ×10⁻⁵kg·m² Standard table Lead 20mm	Starting torque T_S(2) N·m Ground screw
TU100	1 010	15	0.20 (0.26)
	1 160	17	
	1 310	19	
	1 460	20	

Model and size	Length of track rail mm	Table inertia J_T ×10⁻⁵kg·m² Standard table Lead 25mm	Starting torque T_S(2) N·m Ground screw
TU130	1 010	39	0.40 (0.50)
	1 160	43	
	1 310	48	
	1 460	52	
	1 610	57	

Notes (1) The value in ( ) represents track rail length of motor folding back specification.
(2) When two units of slide table are used, it is about 1.5 times as long as that of one unit, and when table of motor folding back specification is used, it is about twice. The value in ( ) represents starting torque of C-Lube specification.
(3) For motor folding back specification, please add the following value to the value in the table.
TU86: 0.86×10⁻⁵kg·m²

Mounting

For the processing accuracy of the Precision Positioning Table mounting surface and the tightening torque of the fixing screws, see page Ⅲ-29.

1N=0.102kgf=0.2248lbs.
1mm=0.03937inch

Motor Folding Back Specification

Motor folding back specification is available for Precision Positioning Table TU, space can be saved by folding back the motor and reducing the overall length of the table. For dimensions of motor folding back specification, please refer to respective dimension table.
For motor folding back specification, assembly should be made by customer since "housing applicable to the specified motor, pulley (on motor side and ball screw side), cover, motor bracket, belt and bolts necessary for assembly" are supplied. However, motor mounting bolts should be prepared by customer.
Motor folding back unit can be mounted in 4 directions as indicated in the following figure.

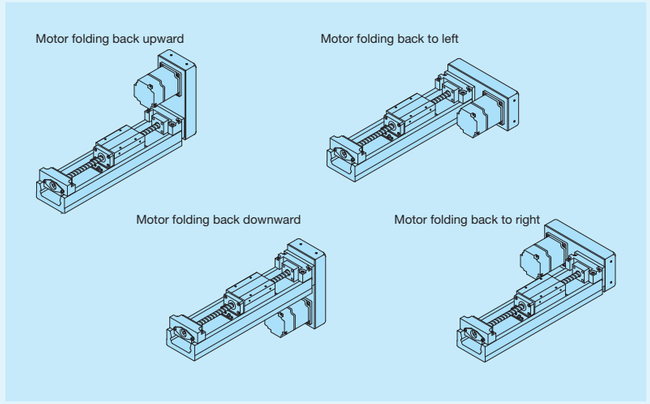

Cover Specification

A bridge cover and bellows are available for Precision Positioning Table TU as a measure for protection against dust.
For the dimensions of table with bellows, please see dimension tables shown in pages of Ⅱ-89 to Ⅱ-90.

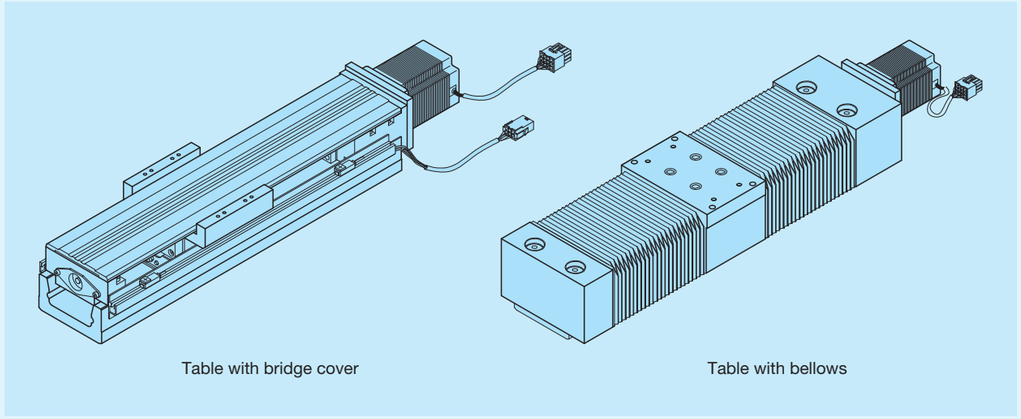

Table with bridge cover

Table with bellows

Two Slide Table Specification

Two slide table specification is available for Precision Positioning Table TU. Ball screw nuts are mounted on slide table at the motor side, and it can be driven by the motor (driving table). Ball screw nuts are not mounted on slide table at the opposite motor side, and it is free condition (driven table).
It is possible to make the structure resistant to moment load by using two slide tables in combination (Table 11). When combining slide tables, allow more clearance than "minimum center distance between two slide tables in close contact" described in the dimension table shown in pages Ⅱ-69 to Ⅱ-100 (Enlarging the span will shorten the stroke.).

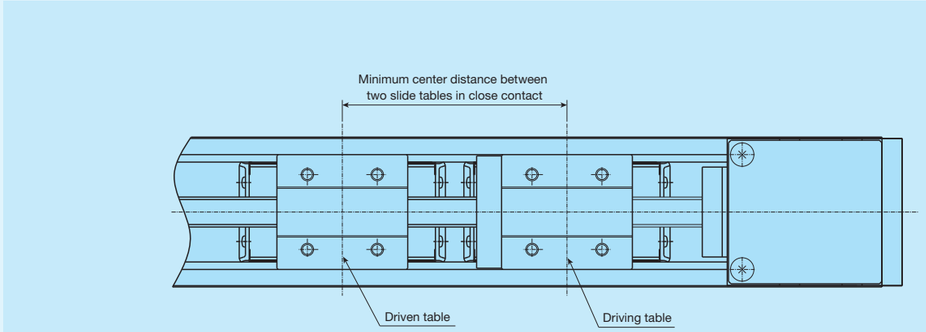

1N=0.102kgf=0.2248lbs.
1mm=0.03937inch

Sensor Specification

Table 15.1 Sensor timing chart (motor inline specification)

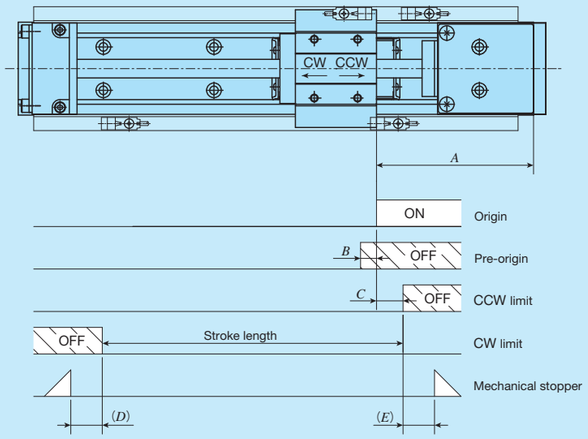

unit: mm

Model and size	Length of slide table	Ball screw lead	*A*	*B*	*C*	*D*(1)	*E*
TU 25	Standard	4	50	2	10	8.4(6)	8
TU 30	Standard	5	50	3	10	10.9(6.4)	8
TU 40	Short	4	85	2	10	7.5(5.5)	4.5
		8		6			
	Standard	4	85	2		10.5(8.5)	8
		8		6			
	Long	4	85	2		4.5(7.5)	8
		8		6			
TU 50	Short	5	85	3	10	7.2(6.2)	3.8
		10		7			
	Standard	5	85	3		8.2(7.2)	8
		10		7			
	Long	5	85	3		4.2(3.2)	8
		10		7			
TU 60	Short	5	110	3	20	14.6(19.6)	10.4
		10		7			
		20(2)	130	14		9.6(14.6)	
	Standard	5	100	3		9.6(9.6)	8
		10		7			
		20	105	14			
	Long	5	100	3		9 (8.5)	8
		10		7			
		20	105	14			
TU 86	Short	10	105(3)	7	20	13 (14)	11
		20		14		12 (14)(4)	4
	Standard	10	105	7		13 (14)	11
		20		14		12 (14)	
	Long	10	105	7		13 (14)	11
		20		14		12 (14)	
TU100	Standard	20	150	14	20	22 (19)	20
TU130	Standard	25	160	18	20	18 (23)	20

Notes (1) The value in ( ) indicates the dimension for two slide tables.
(2) After pre-origin signal is turned off, CCW limit is turned on before turned off.
(3) In case of track rail lengths of 1,390mm and 1,590mm, this length is 110mm.
(4) In case of track rail lengths of 1,390mm and 1,590mm, this length is 7 (9)mm.

Remarks 1. Mounting a sensor is specified using the corresponding identification number.
2. For the specifications of respective sensors, please see the section of sensor specification in General Explanation.
3. For tables with bellows, the values in the table are not applied.
4. For tables with C-Lube plate, please see Table 15.3.

Table 15.2 Sensor timing chart (motor folding back specification)

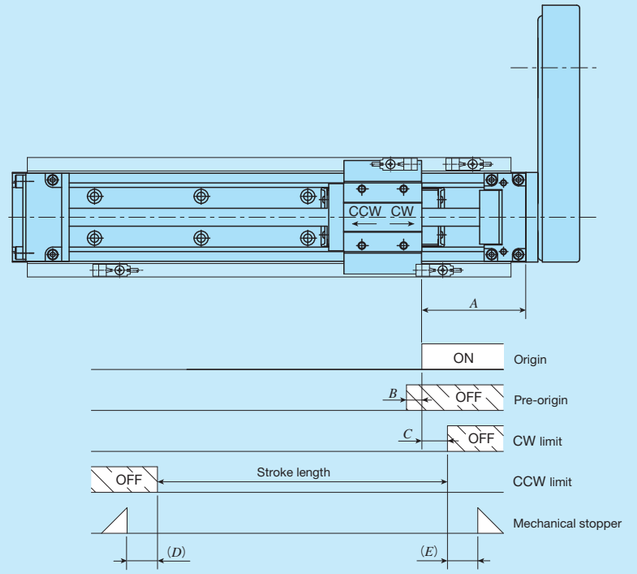

* In a table of motor folding back specification, the movements of CW direction and CCW direction in a slide table become reversed. unit: mm

Size	Length of slide table	Ball screw lead	*A*	*B*	*C*	*D*(1)	*E*
TU 40	Short	4	45	2	10	7.5(5.5)	4.5
		8		6			
	Standard	4	45	2		10.5(8.5)	8
		8		6			
	Long	4	45	2		4.5(7.5)	8
		8		6			
TU 50	Short	5	45	3	10	7.2(6.2)	3.8
		10		7			
	Standard	5	45	3		8.2(7.2)	8
		10		7			
	Long	5	45	3		4.2(3.2)	8
		10		7			
TU 60	Short	5	64	3	20	14.6(19.6)	10.4
		10		7			
		20(2)	84	14		9.6(14.6)	
	Standard	5	59	3		9.6(9.6)	8
		10		7			
		20		14			
	Long	5	59	3		9 (8.5)	8
		10		7			
		20		14			
TU 86	Short	10	62	7	20	13 (14)	11
		20		14		12 (14)	4
	Standard	10	62	7		13 (14)	11
		20		14		12 (14)	
	Long	10	62	7		13 (14)	11
		20		14		12 (14)	

Notes (1) The value in ( ) indicates the dimension for two slide tables.
(2) After pre-origin signal is turned off, CCW limit is turned on before turned off.

Remarks 1. Mounting a sensor is specified using the corresponding identification number.
2. For the specifications of respective sensors, please see the section of sensor specification in General Explanation.
3. For tables with bellows, the values in the table are not applied.
4. For tables with C-Lube plate, please see Table 15.4.

1N=0.102kgf=0.2248lbs.
1mm=0.03937inch

Table 15.3 Sensor timing chart (motor inline specification, with C-Lube)

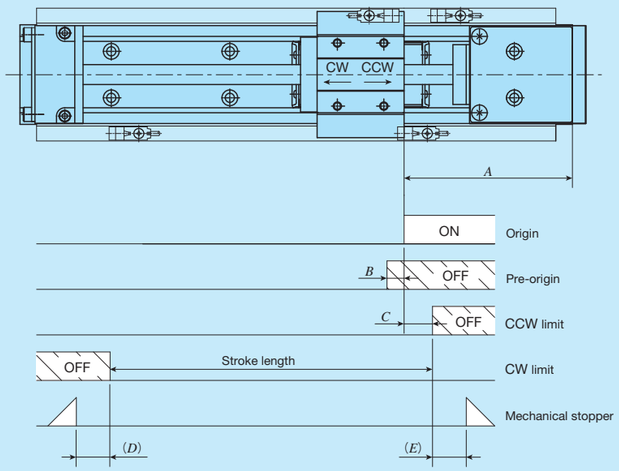

unit: mm

Model and size	Length of slide table	Ball screw lead	A	B	C	D(1)	E
TU 40	Short	4	100	2	10	7.5(5.5)	9
		8		6			
	Standard	4	100	2		5.5(8.5)	9
		8		6			
	Long	4	100	2		9.5(7.5)	9
		8		6			
TU 50	Short	5	100	3	10	7.2(6.2)	8
		10		7			
	Standard	5	100	3		8.2(7.2)	8
		10		7			
	Long	5	100	3		9.2(8.2)	8
		10		7			
TU 60	Short	5	120	3	20	9.6(9.6)	5.4
		10		7			
		20(2)	140	14			
	Standard	5	100	3		4.6(9.6)	8
		10		7			
		20	115	14		9.6(4.6)	5.4
	Long	5	100	3		4 (9)	8
		10		7			
		20	105	14		4 (4)	
TU 86	Short	10	130	7	20	8 (14)	19
		20		14		7 (14)	9
	Standard	10	105	7		13 (9)	11
		20		14		12 (9)	
	Long	10	105	7		8 (9)	11
		20		14		7 (9)	
TU100	Standard	20	150	14	20	17 (14)	20
TU130	Standard	25	160	18	20	18 (18)	20

Notes (1) The value in ( ) indicates the dimension for two slide tables.
(2) After pre-origin signal is turned off, CCW limit is turned on before turned off.
Remarks 1. Mounting a sensor is specified using the corresponding identification number.
2. For the specifications of respective sensors, please see the section of sensor specification in General Explanation.
3. For tables with bellows, the values in the table are not applied.

Table 15.4 Sensor timing chart (motor folding back specification, with C-Lube)

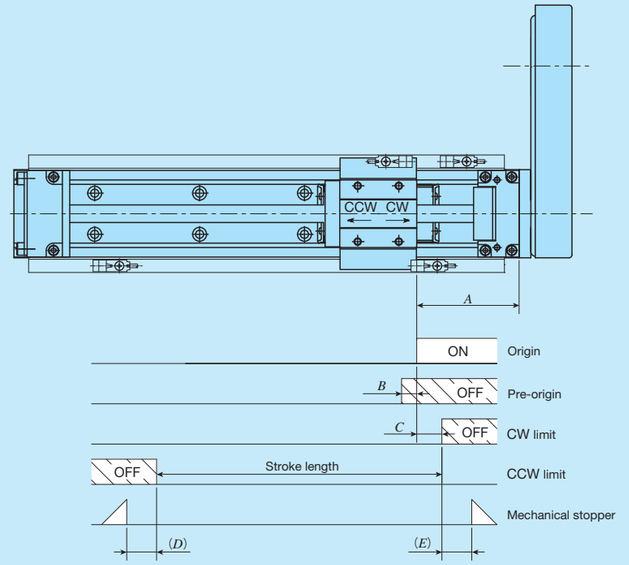

* In a table of motor folding back specification, the movements of CW direction and CCW direction in a slide table becomes reversed. unit: mm

Model and size	Length of slide table	Ball screw lead	A	B	C	D(1)	E
TU 40	Short	4	60	2	10	7.5(5.5)	9
		8		6			
	Standard	4	60	2		5.5(8.5)	9
		8		6			
	Long	4	60	2		9.5(7.5)	9
		8		6			
TU 50	Short	5	60	3	10	7.2(6.2)	8
		10		7			
	Standard	5	60	3		8.2(7.2)	8
		10		7			
	Long	5	60	3		9.2(8.2)	8
		10		7			
TU 60	Short	5	75	3	20	8.6(8.6)	6.4
		10		7			
		20(2)	94	14		9.6(9.6)	5.4
	Standard	5	60	3		8.6(3.6)	9
		10		7			
		20	69	14		9.6(4.6)	5.4
	Long	5	60	3		8 (3)	9
		10		7			
		20	59	14		4 (4)	8
TU 86	Short	10	90	7	20	10 (6)	22
		20		14		9 (6)	12
	Standard	10	60	7		10 (6)	9
		20		14		9 (6)	
	Long	10	60	7		5 (6)	9
		20		14		4 (6)	

Notes (1) The dimension in ( ) represents dimensions for two slide tables.
(2) After pre-origin signal is turned off, CCW limit is turned on before turned off.
Remarks 1. Mounting a sensor is specified using the corresponding identification number.
2. For the specifications of respective sensors, please see the section of sensor specification in General Explanation.
3. For tables with bellows, the values in the table are not applied.

1N=0.102kgf=0.2248lbs.
1mm=0.03937inch

Dimensions of Motor Attachment

■ Motor inline specification

Remark: Motor attachment for NEMA, please see the pages Ⅲ-31 or later.

TU25

AT100 (without attachment)

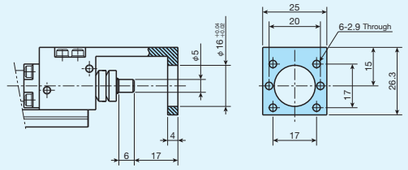

AT101

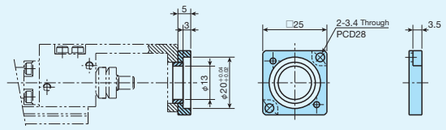

AT125

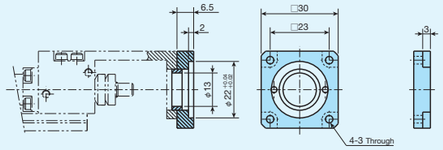

TAE9065-ATE063

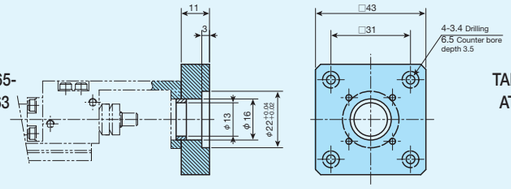

TU30

AT100 (without attachment)

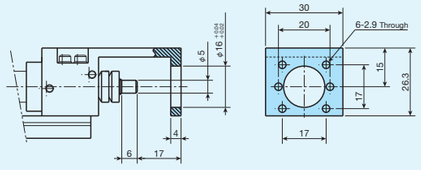

AT101

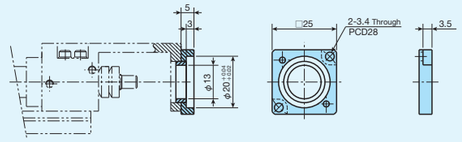

AT125

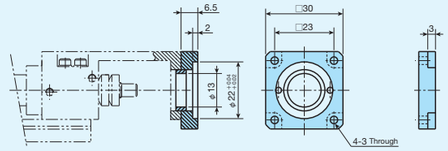

TAE9065-ATE063

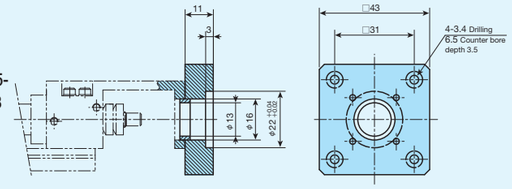

TU40

AT100 (without attachment)

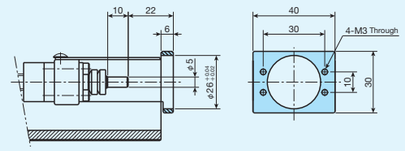

AT102

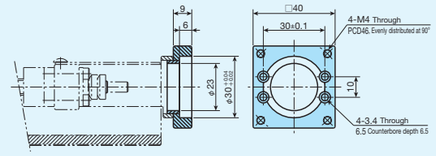

AT110

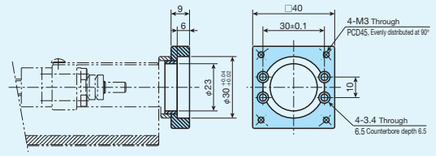

AT117 AT122

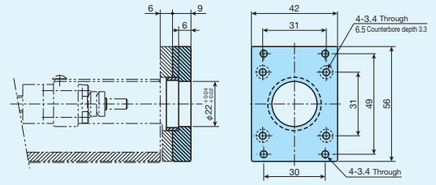

TAE9059-ATE054

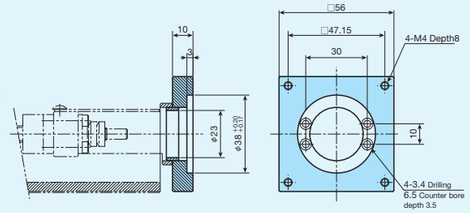

TU50

AT100 (without attachment)

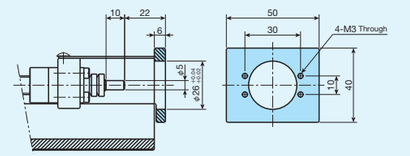

AT102

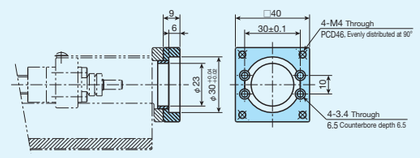

AT110

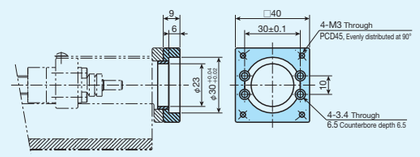

AT117 AT122

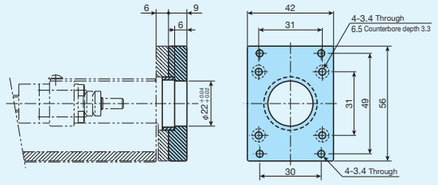

TAE9059-ATE054

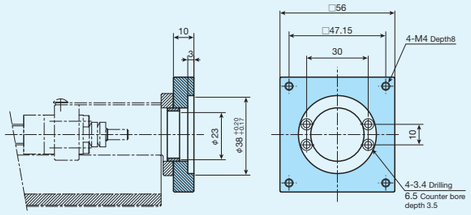

1N=0.102kgf=0.2248lbs.
1mm=0.03937inch

TU60

AT100 (without attachment)

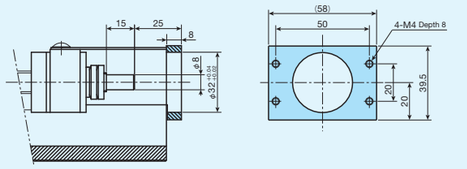

AT103

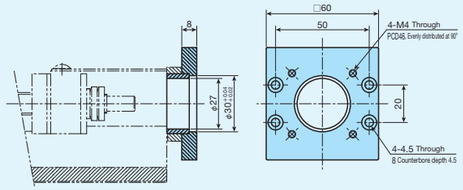

AT104

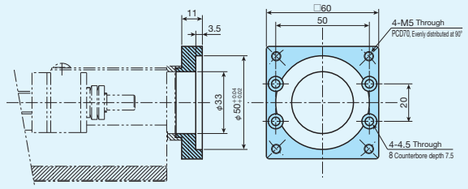

AT111

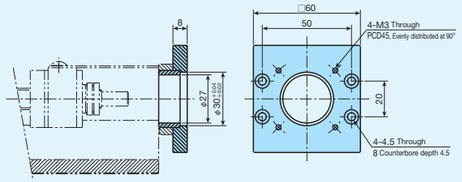

AT112

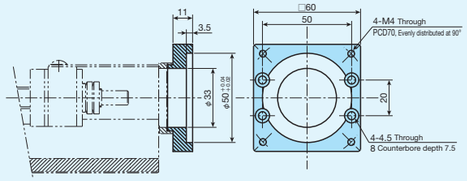

AT118
AT123

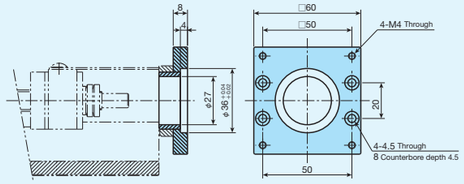

TAE9017-ATE139

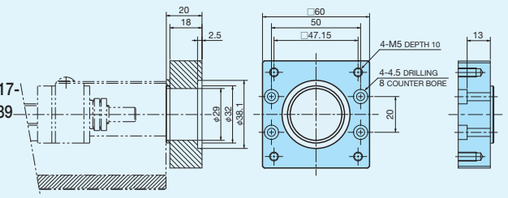

TAE9014-ATE094

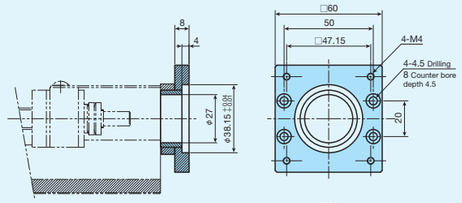

TAE9014-ATE41

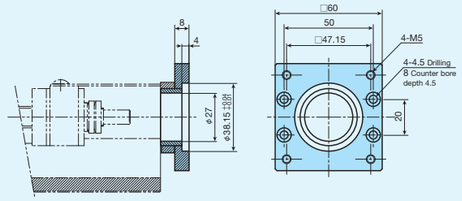

TU86

AT100 (without attachment)

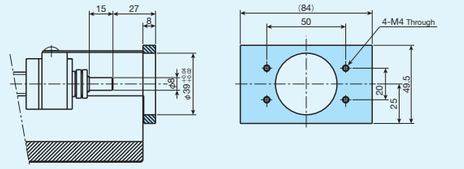

AT105

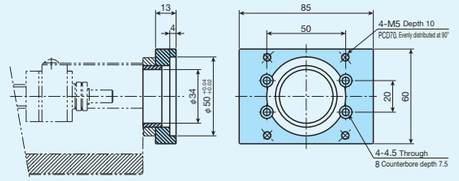

AT106

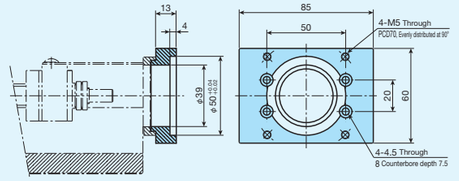

AT113

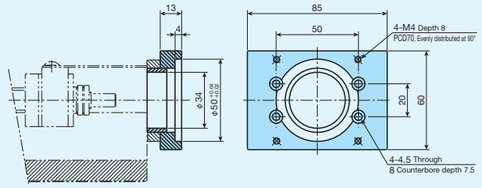

AT114

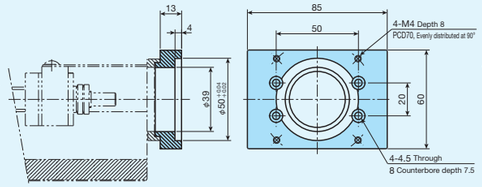

AT119
AT124

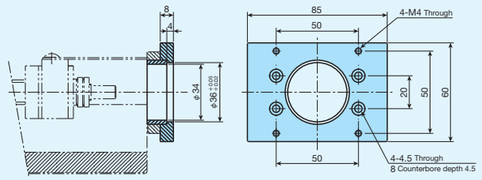

TAE9017-ATE129

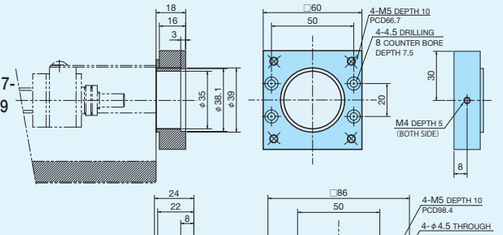

TAE9047-ATE130

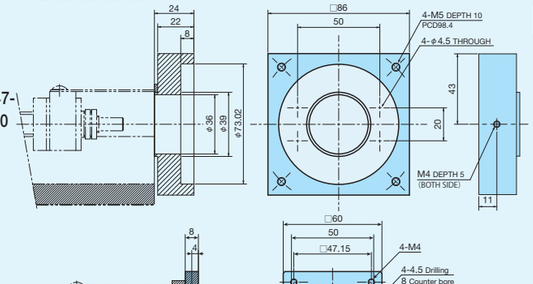

TAE9017-ATE093

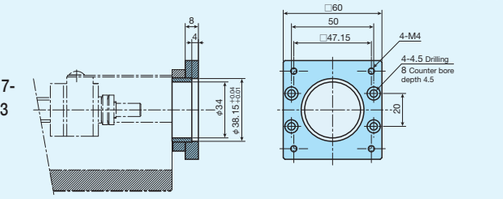

TAE9017-ATE058

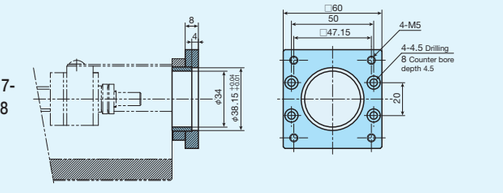

TAE9056-ATE45

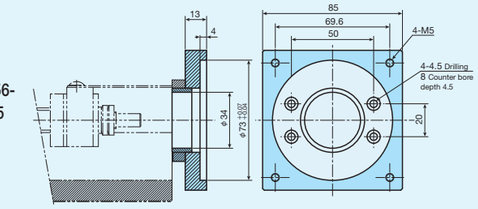

TU

1N=0.102kgf=0.2248lbs.
1mm=0.03937inch

Dimensions of Motor Attachment

TU100

AT100 (without attachment)

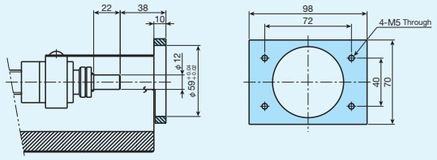

AT107

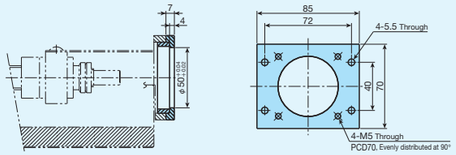

AT115

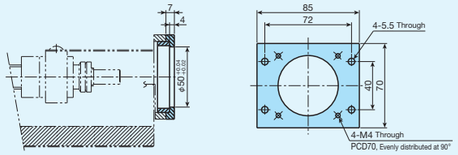

AT120

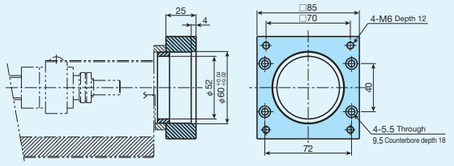

TAE9047-ATE062

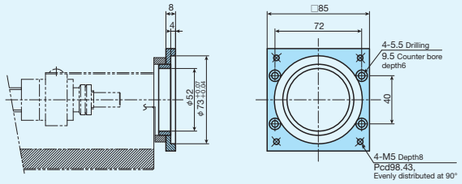

TAE9047-ATE060

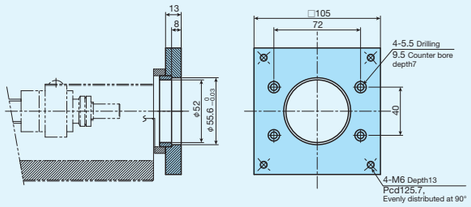

TU130

AT100 (without attachment)

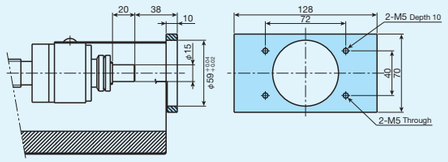

AT108

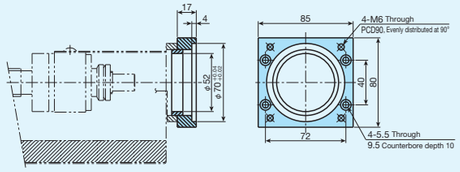

AT116

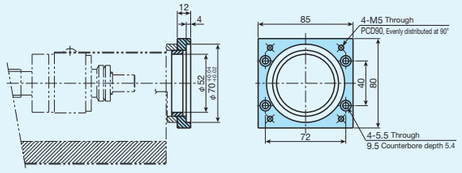

AT121

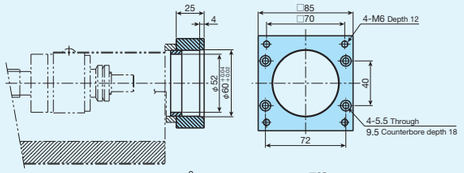

TAE9047-ATE062

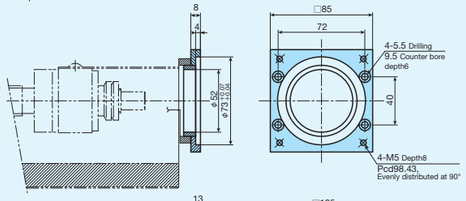

TAE9047-ATE060

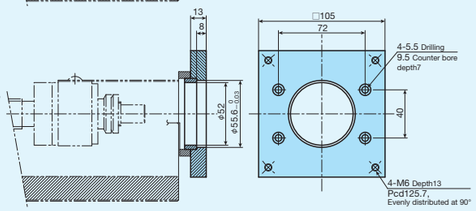

■ Motor folding back specification

TU40

AR100 (without attachment)

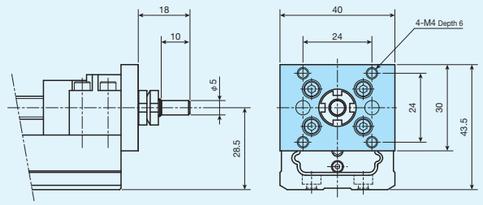

TU50

AR100 (without attachment)

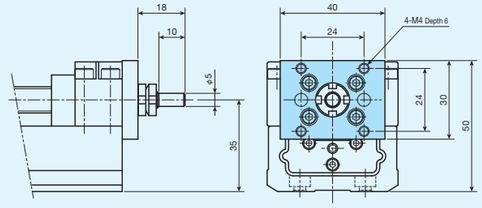

TU40, TU50

AR101

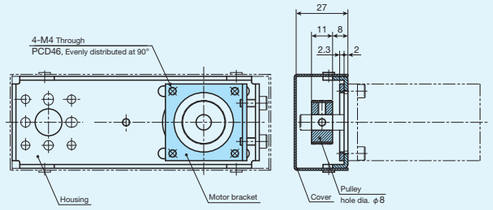

AR105

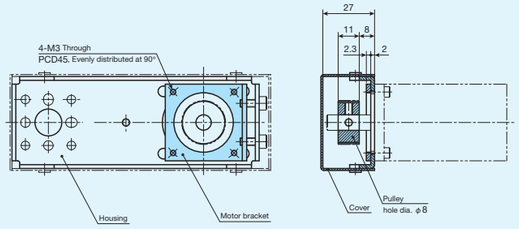

AR109

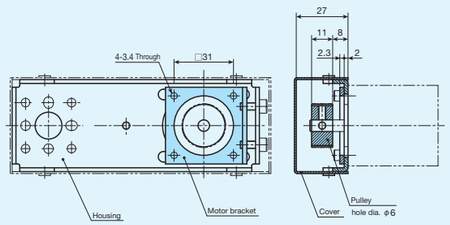

AR110

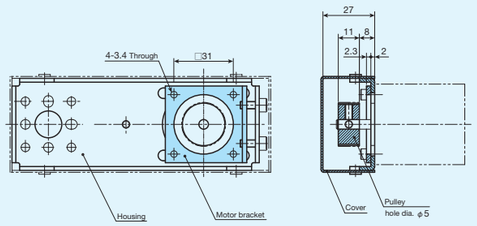

TU

1N=0.102kgf=0.2248lbs.
1mm=0.03937inch

Dimensions of Motor Attachment

TU60

AR100
(without attachment)

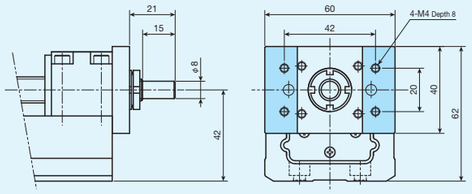

AR102

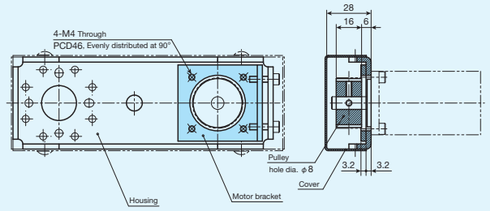

AR103

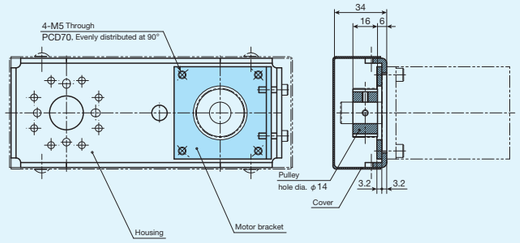

AR106

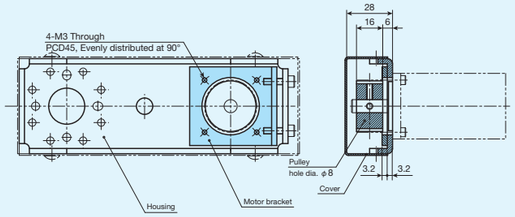

AR107

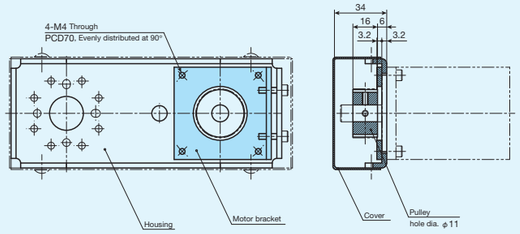

TU86

AR100
(without attachment)

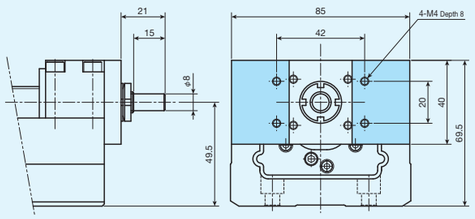

AR104

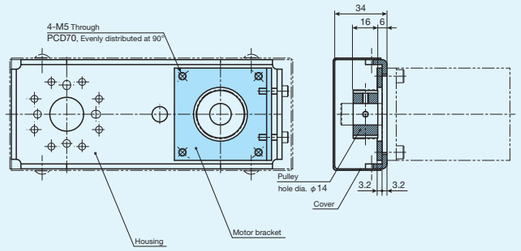

AR108

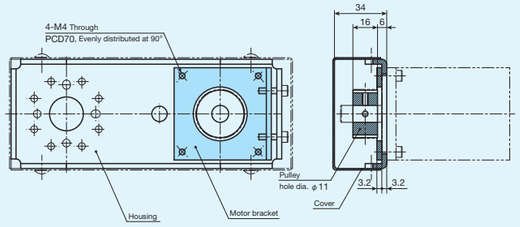

Example of Combination

In Precision Positioning Table TU, using XY bracket enables you to configure various two-axis combination. Light aluminum alloy-made XY bracket can be mounted to a flange type standard table. Table 16 shows various XY bracket models. If you are interested, please specify the model number of your desired model from the table.

Table 16 Configuration of two-axis combination and XY bracket models

Combination by use of XY bracket			Combination possible without the bracket		
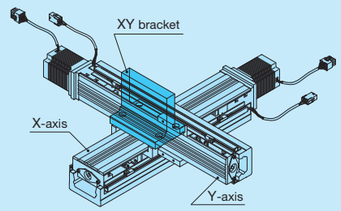			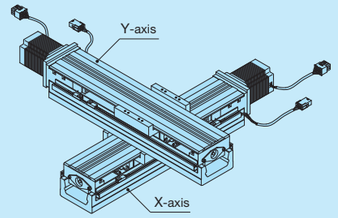		
X-axis	Y-axis	Model number of XY bracket	X-axis	Y-axis	Model number of XY bracket
–	–	–	TU 25F	TU 25	Not required
–	–	–	TU 30F	TU 30	Not required
TU 40F	TU 40	TAE0412-BR	–	–	–
TU 50F	TU 40	TAE0413-BR	–	–	–
TU 50F	TU 50	TAE0414-BR	–	–	–
TU 60F	TU 50	TAE0415-BR	–	–	–
TU 60F	TU 60	TAE0409-BR	–	–	–
TU 86F	TU 60	TAE0410-BR	TU 86F	TU 60	Not required
TU 86F	TU 86	TAE0411-BR	TU 86F	TU 86	Not required
–	–	–	TU130F	TU100	Not required

1N=0.102kgf=0.2248lbs.
1mm=0.03937inch

Table 17.1 Dimensions of XY bracket

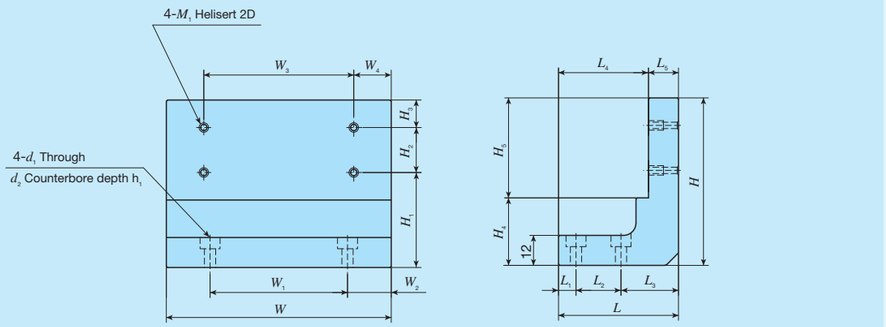

unit: mm

Model number	W	W_1	W_2	W_3	W_4	H	H_1	H_2	H_3	H_4	H_5	L	L_1	L_2	L_3	L_4	L_5	M_1	d_1	d_2	h_1
TAE0412-BR	90	55	17.5	60	15	67	38	18	11	27	40	48	7	18	23	36	12	M3	4.5	8	4.5
TAE0413-BR	90	65	12.5	60	15	67	38	18	11	27	40	51	9	25	17	39	12	M3	4.5	8	4.5
TAE0414-BR	90	65	12.5	80	5	77	39.5	25	12.5	27	50	57	9	25	23	45	12	M4	4.5	8	4.5

Table 17.2 Dimensions of XY bracket

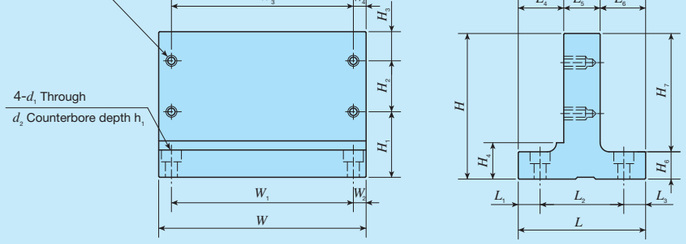

unit: mm

Model number	W	W_1	W_2	W_3	W_4	H	H_1	H_2	H_3	H_4	H_6	H_7	L	L_1	L_2	L_3	L_4	L_5	L_6	M_1	d_1	d_2	h_1
TAE0415-BR	114	74	20	80	17	70	32.5	25	12.5	20	15	55	52.4	12.2	28	12.2	19.2	15	18.2	M4	5.5	9.5	5.5
TAE0409-BR	114	74	20	100	7	80	36	28	16	20	15	65	52.4	12.2	28	12.2	19.2	15	18.2	M5	5.5	9.5	5.5
TAE0410-BR	114	100	7	100	7	80	36	28	16	20	15	65	70	12	46	12	25	20	25	M5	6.6	11	6.5
TAE0411-BR	114	100	7	100	7	106	40	46	20	20	15	91	73	13.5	46	13.5	26.5	20	26.5	M6	6.6	11	6.5

1N=0.102kgf=0.2248lbs.
1mm=0.03937inch

TU25

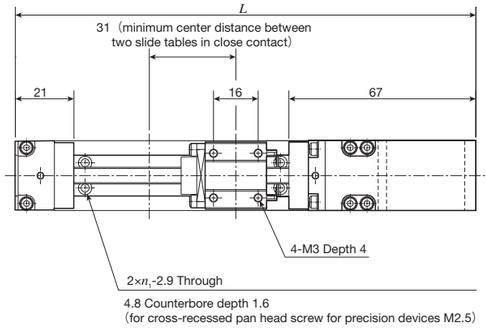

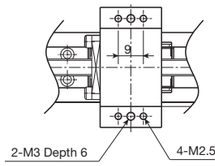

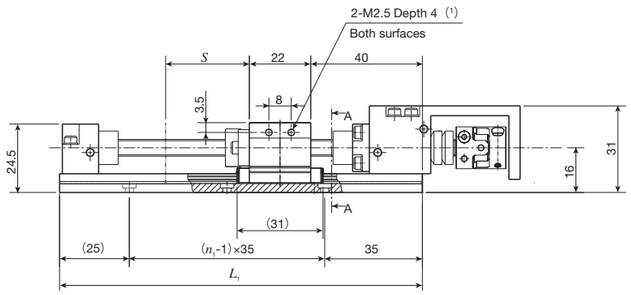

A-A Sectional dimension

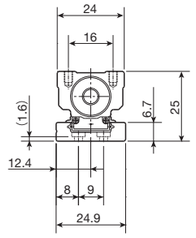

TU25S

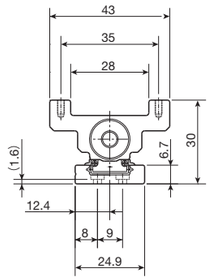

TU25F

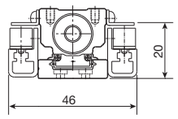

With sensor

Note (1) No thread hole is prepared for TU25F.

Dimensions

unit: mm

Model and size	Length of track rail L_1	Overall length L	Stroke length S (1)	n_1	Mass of slide table kg	Mass (2) kg
TU25S	130	165	30(−)	3	0.05	0.31
	165	200	65(45)	4		0.34
	200	235	100(80)	5		0.38
TU25F	130	165	30(−)	3	0.07	0.33
	165	200	65(45)	4		0.36
	200	235	100(80)	5		0.40

Notes (1) The value indicates the allowable stroke length when limit sensors are mounted. The value in ( ) represents dimension for two slide tables in close contact.
(2) The value shows the mass of the entire table with one slide table.
Remark: The material of track rail and casing is stainless steel.

TU30

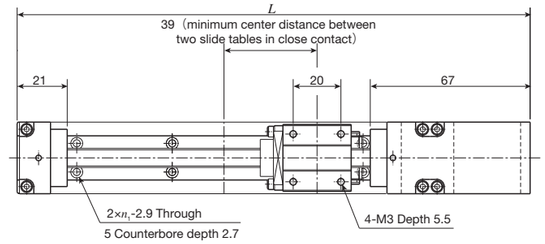

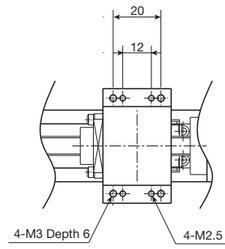

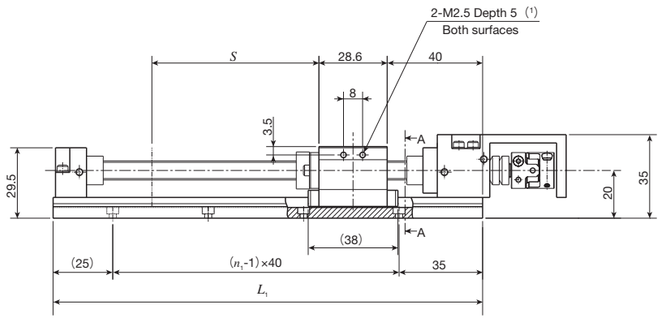

A-A Sectional dimension

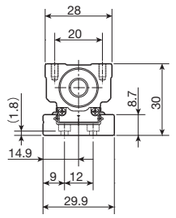

TU30S

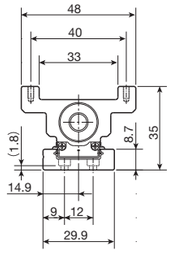

TU30F

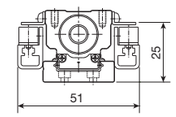

With sensor

Note (1) No thread hole is prepared for TU30F.

Dimensions

unit: mm

Model and size	Length of track rail L_1	Overall length L	Stroke length S (1)	n_1	Mass of slide table kg	Mass (2) kg
TU30S	140	175	30(−)	3	0.09	0.49
	180	215	70(45)	4		0.56
	220	255	110(85)	5		0.63
	260	295	150(125)	6		0.70
	300	335	190(165)	7		0.77
	340	375	230(205)	8		0.84
TU30F	140	175	30(−)	3	0.12	0.52
	180	215	70(45)	4		0.59
	220	255	110(85)	5		0.66
	260	295	150(125)	6		0.73
	300	335	190(165)	7		0.80
	340	375	230(205)	8		0.87

Notes (1) The value indicates the allowable stroke length when limit sensors are mounted. The value in ( ) represents dimension for two slide tables in close contact.
(2) The value shows the mass of the entire table with one slide table.
Remark: The material of track rail and casing is stainless steel.

1N=0.102kgf=0.2248lbs.
1mm=0.03937inch

TU40

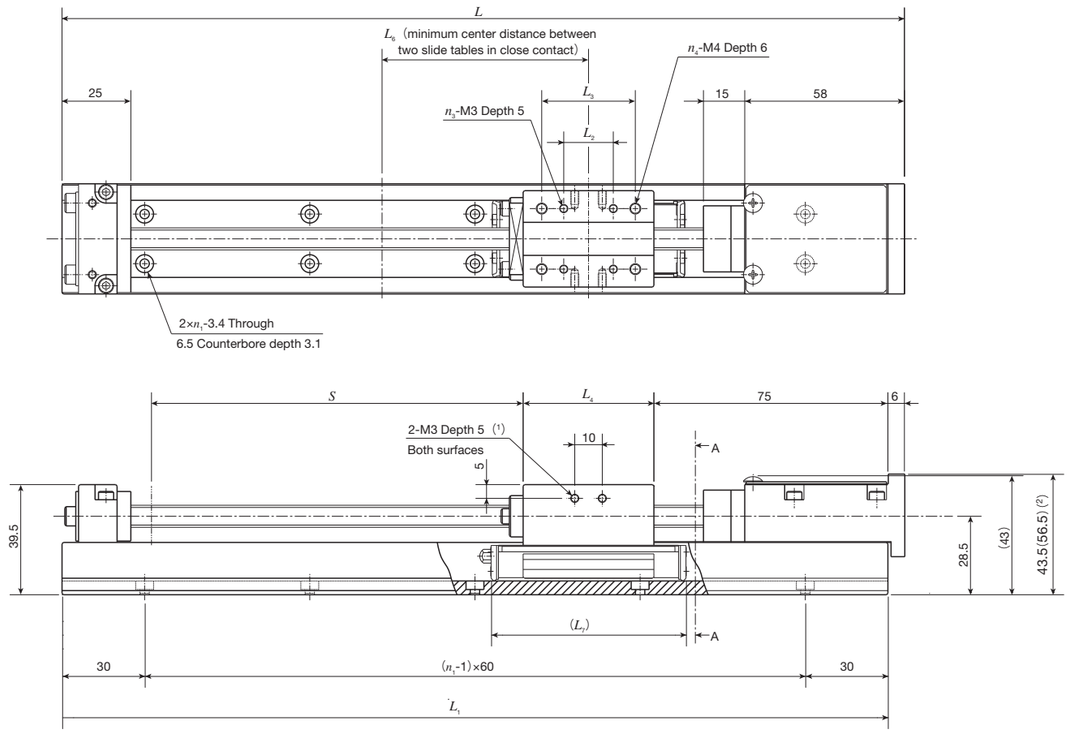

A-A Sectional dimension

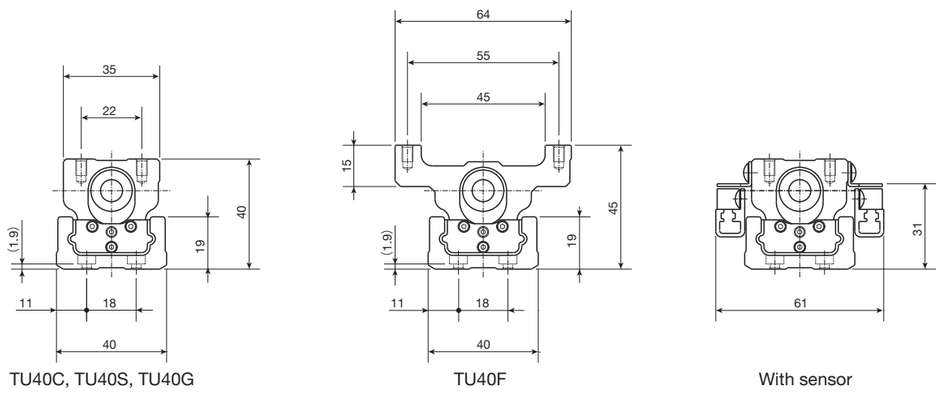

TU40C, TU40S, TU40G　　TU40F　　With sensor

Note (1) No thread hole is prepared for TU40F.
(2) The dimension in ( ) is applied to motor attachment codes AT117 and AT122.

Dimensions of slide table　　unit: mm

Model and size	L_2	L_3	L_4	L_6	L_7	n_3	n_4	Mass kg
TU40C	–	–	19.5	45	43	–	2	0.1
TU40S	–	18	31.5	60	55	–	4	0.2
TU40G	18	34	47.5	75	71	4	4	0.3
TU40F	–	18	31.5	60	55	–	4	0.3

Dimensions of track rail　　unit: mm

Length of track rail L_1	Overall length L	n_1	Stroke length S(1)			Mass (2) kg			
			TU40C	TU40S TU40F	TU40G	TU40C	TU40S	TU40G	TU40F
180	186	3	45(–)	30(–)	– (–)	0.9	1.0	–	1.1
240	246	4	105(70)	90(40)	80(–)	1.1	1.2	1.3	1.3
300	306	5	165(130)	150(100)	140(70)	1.2	1.3	1.4	1.4
360	366	6	225(190)	210(160)	200(130)	1.4	1.5	1.6	1.6
420	426	7	285(250)	270(220)	260(190)	1.6	1.7	1.8	1.8

Notes (1) The value indicates the allowable stroke length when limit sensors are mounted. The value in ( ) represents dimension for two slide tables in close contact.
(2) The value shows the mass of the entire table with one slide table.

1N=0.102kgf=0.2248lbs.
1mm=0.03937inch

TU50

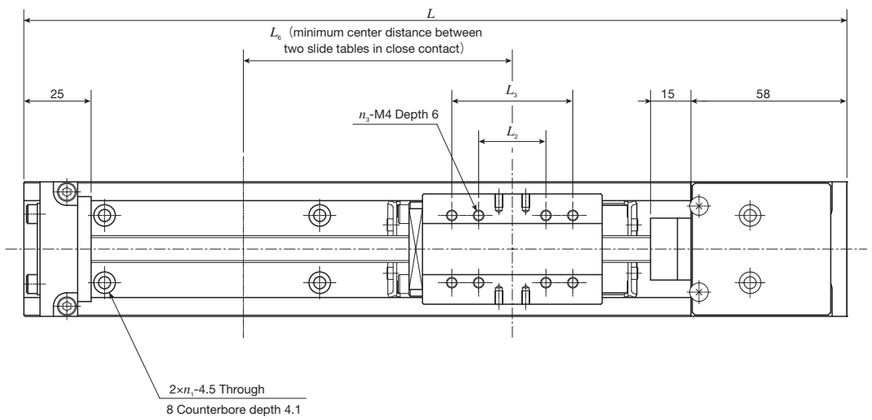

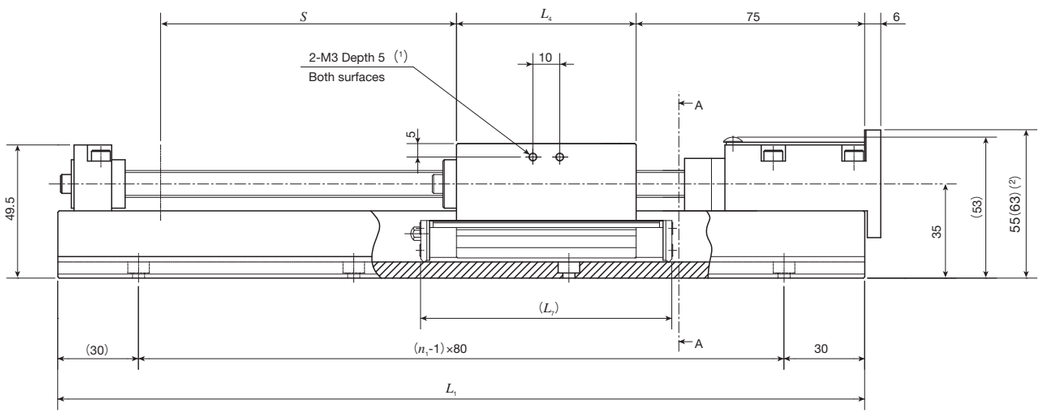

A-A Sectional dimension

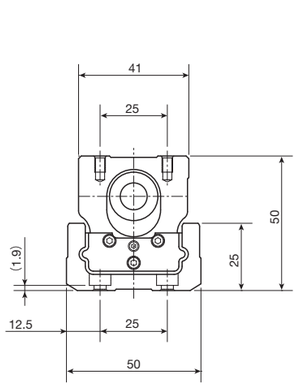

TU50C, TU50S, TU50G

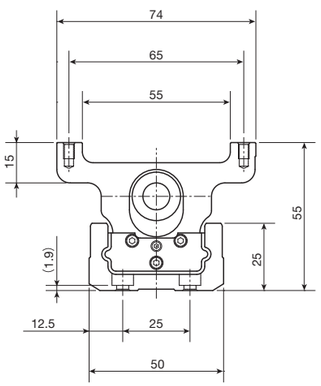

TU50F

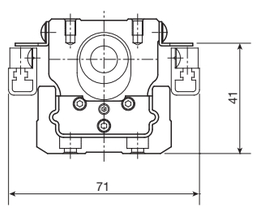

With sensor

Note (1) No thread hole is prepared for TU50F.
(2) The dimension in ( ) is applied to motor attachment codes AT117 and AT122.

Dimensions of slide table

unit: mm

Model and size	L_2	L_3	L_4	L_6	L_7	n_3	Mass kg
TU50C	–	–	23.8	55	51	2	0.2
TU50S	25	–	42.8	75	70	4	0.4
TU50G	25	45	66.8	100	94	8	0.7
TU50F	25	–	42.8	75	70	4	0.5

Dimensions of track rail

unit: mm

Length of track rail L_1	Overall length L	n_1	Stroke length S(1)			Mass(2) kg			
			TU50C	TU50S TU50F	TU50G	TU50C	TU50S	TU50G	TU50F
220	226	3	80(–)	60(–)	– (–)	1.6	1.8	–	1.9
300	306	4	160(115)	140(75)	120(–)	1.9	2.1	2.4	2.2
380	386	5	240(195)	220(155)	200(110)	2.3	2.5	2.8	2.6
460	466	6	320(275)	300(235)	280(190)	2.7	2.9	3.2	3.0
540	546	7	400(355)	380(315)	360(270)	3.1	3.3	3.6	3.4
620	626	8	480(435)	460(395)	440(350)	3.5	3.7	3.9	3.8
700	706	9	560(515)	540(475)	520(430)	3.8	4.0	4.3	4.1

Notes (1) The value indicates the allowable stroke length when limit sensors are mounted. The value in ( ) represents dimension for two slide tables in close contact.
(2) The value shows the mass of the entire table with one slide table.

1N=0.102kgf=0.2248lbs.
1mm=0.03937inch

IKO Precision Positioning Table TU

TU60

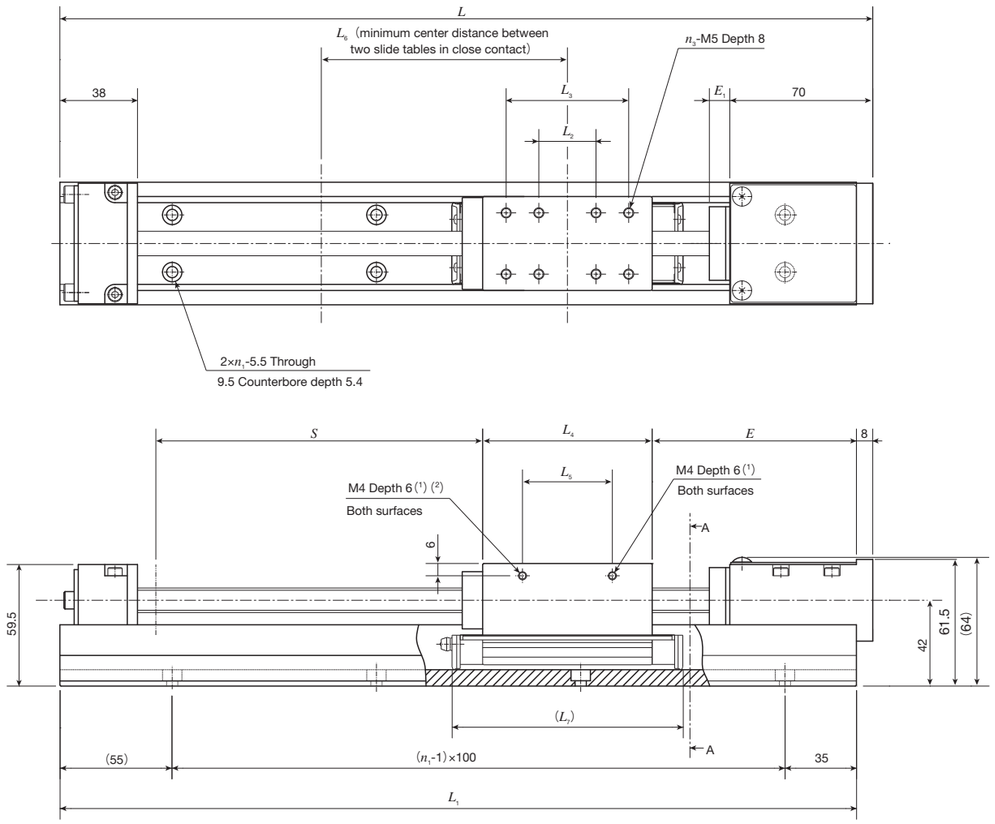

A-A Sectional dimension

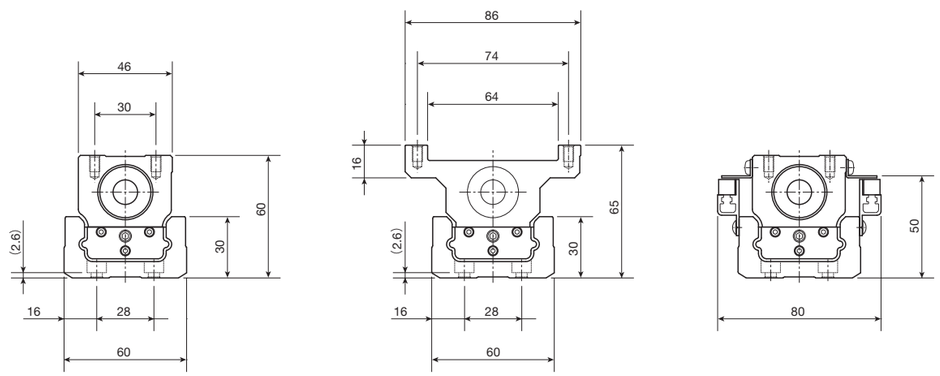

TU60C, TU60S, TU60G　　TU60FC, TU60F, TU60FG　　With sensor

Notes (1) No thread hole is prepared for TU60FC, TU60F, TU60FG.
(2) TU60C is ϕ3 depth 2.

<Ball screw lead 5mm, 10mm>

Dimensions of slide table　　unit: mm

Model and size	L_2	L_3	L_4	L_5	L_6	L_7	n_3	E	E_1	Mass kg
TU60C	–	–	27.4	17.4	65	58	2	90	15	0.3
TU60S	28	–	52.4	18	90	83	4	80	10	0.6
TU60G	28	60	83	44	120.5	113	8	80	10	1.0
TU60FC	–	–	27.4	–	65	58	2	90	15	0.4
TU60F	28	–	52.4	–	90	83	4	80	10	0.8
TU60FG	28	60	83	–	120.5	113	8	80	10	1.3

Dimensions of track rail　　unit: mm

Length of track rail L_1	Overall length L	n_1	Stroke length S (1)			Mass (2) kg					
			TU60C TU60FC	TU60S TU60F	TU60G TU60FG	TU60C	TU60S	TU60G	TU60FC	TU60F	TU60FG
290	298	3	110(50)	100(–)	70(–)	3.0	3.3	3.6	3.1	3.5	3.9
390	398	4	210(150)	200(120)	170(60)	3.7	4.0	4.4	3.8	4.2	4.7
490	498	5	310(250)	300(220)	270(160)	4.5	4.8	5.1	4.6	4.9	5.4
590	598	6	410(350)	400(320)	370(260)	5.2	5.5	5.8	5.3	5.7	6.1
690	698	7	510(450)	500(420)	470(360)	6.0	6.2	6.6	6.1	6.4	6.9
790	798	8	610(550)	600(520)	570(460)	6.7	7.0	7.3	6.8	7.2	7.6
990	998	10	810(750)	800(720)	770(660)	8.3	8.6	9.0	8.4	8.7	9.1
1190	1198	12	1 010(950)	1 000(920)	970(860)	9.8	10.1	10.5	9.9	10.2	10.6

Notes (1) The value indicates the allowable stroke length when limit sensors are mounted. The value in ( ) represents dimension for two slide tables in close contact.
(2) The value shows the mass of the entire table with one slide table.

<Ball screw lead 20mm>

Dimensions of slide table　　unit: mm

Model and size	L_2	L_3	L_4	L_5	L_6	L_7	n_3	E	E_1	Mass kg
TU60C	–	–	27.4	17.4	65	58	2	110	15	0.3
TU60S	28	–	52.4	18	90	83	4	85	15	0.6
TU60G	28	60	83	44	120.5	113	8	85	15	1.0
TU60FC	–	–	27.4	–	65	58	2	110	15	0.4
TU60F	28	–	52.4	–	90	83	4	85	15	0.8
TU60FG	28	60	83	–	120.5	113	8	85	15	1.3

Dimensions of track rail　　unit: mm

Length of track rail L_1	Overall length L	n_1	Stroke length S (1)			Mass (2) kg					
			TU60C TU60FC	TU60S TU60F	TU60G TU60FG	TU60C	TU60S	TU60G	TU60FC	TU60F	TU60FG
290	298	3	95(–)	95(–)	65(–)	3.1	3.4	3.7	3.2	3.6	4.0
390	398	4	195(135)	195(115)	165(–)	3.8	4.1	4.5	3.9	4.3	4.8
490	498	5	295(235)	295(215)	265(155)	4.6	4.9	5.2	4.7	5.0	5.5
590	598	6	395(335)	395(315)	365(255)	5.3	5.6	5.9	5.4	5.8	6.2
690	698	7	495(435)	495(415)	465(355)	6.1	6.3	6.7	6.2	6.5	7.0
790	798	8	595(535)	595(515)	565(455)	6.8	7.1	7.4	6.9	7.3	7.7

Notes (1) The value indicates the allowable stroke length when limit sensors are mounted. The value in ( ) represents dimension for two slide tables in close contact.
(2) The value shows the mass of the entire table with one slide table.

1N=0.102kgf=0.2248lbs.
1mm=0.03937inch

TU86

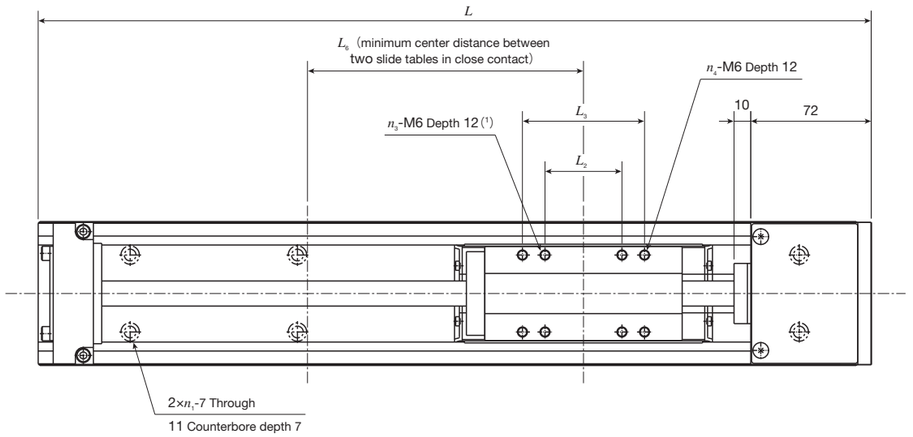

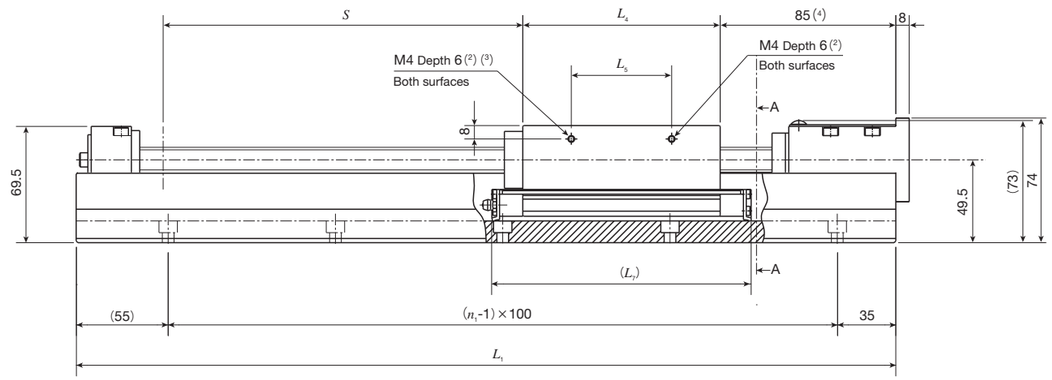

A-A Sectional dimension

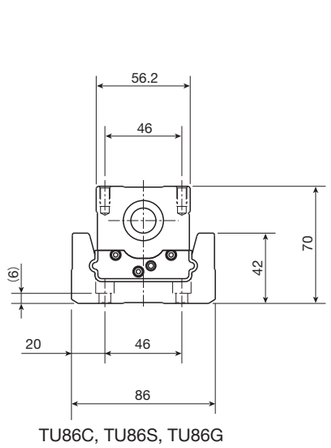

TU86C, TU86S, TU86G

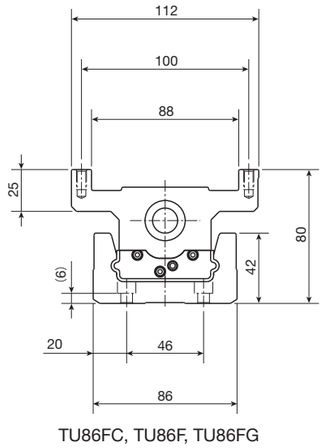

TU86FC, TU86F, TU86FG

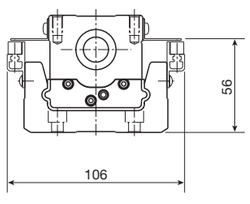

With sensor

Notes (1) TU86F is M5 depth 12.
(2) No thread hole is prepared for TU86FC, TU86F, TU86FG.
(3) TU86C is ϕ3 depth 2.
(4) If the track rail length for TU86C and TU86FC is 1,390 or 1,590, the height is 90.

Dimensions of slide table

unit: mm

Model and size	L_2	L_3	L_4	L_5	L_6	L_7	n_3	n_4	Mass kg
TU86C	–	–	43	30	90	80	2	–	0.7
TU86S	46	–	93	63	140	130	4	–	1.7
TU86G	46	73	118	60	165	155	4	4	2.2
TU86FC	–	–	43	–	90	80	2	–	1.1
TU86F	28	46	93	–	140	130	4	4	2.3
TU86FG	46	73	118	–	165	155	4	4	3.0

Dimensions of track rail

unit: mm

Length of track rail L_1	Overall length L	n_1	Stroke length S (1)			Mass (2) kg					
			TU86C TU86FC	TU86S TU86F	TU86G TU86FG	TU86C	TU86S	TU86G	TU86FC	TU86F	TU86FG
490	498	5	300(220)	250(120)	225(–)	9.9	10.9	11.4	10.3	11.5	12.2
590	598	6	400(320)	350(220)	325(170)	10.8	11.7	12.2	11.2	12.4	13.0
690	698	7	500(420)	450(320)	425(270)	12.3	13.2	13.8	12.7	13.9	14.6
790	798	8	600(520)	550(420)	525(370)	13.8	14.7	15.3	14.2	15.4	16.1
890	898	9	700(620)	650(520)	625(470)	15.0	15.9	16.4	15.4	16.6	17.2
990	998	10	800(720)	750(620)	725(570)	16.5	17.4	17.9	16.9	18.1	18.7
1090	1 098	11	900(820)	850(720)	825(670)	18.0	18.9	19.4	18.4	19.6	20.2
1190	1 198	12	1 000(920)	950(820)	925(770)	19.5	20.4	21.0	19.9	21.1	21.8
1390	1 398	14	1 200(1 120)	1 150(1 020)	1 125(970)	24.5	25.4	25.9	24.9	26.0	26.7
1590	1 598	16	1 400(1 320)	1 350(1 220)	1 325(1 170)	27.8	28.7	29.2	28.2	29.3	30.0

Notes (1) The value indicates the allowable stroke length when limit sensors are mounted. The value in ( ) represents dimension for two slide tables in close contact.
(2) The value shows the mass of the entire table with one slide table.

1N=0.102kgf=0.2248lbs.
1mm=0.03937inch

TU100

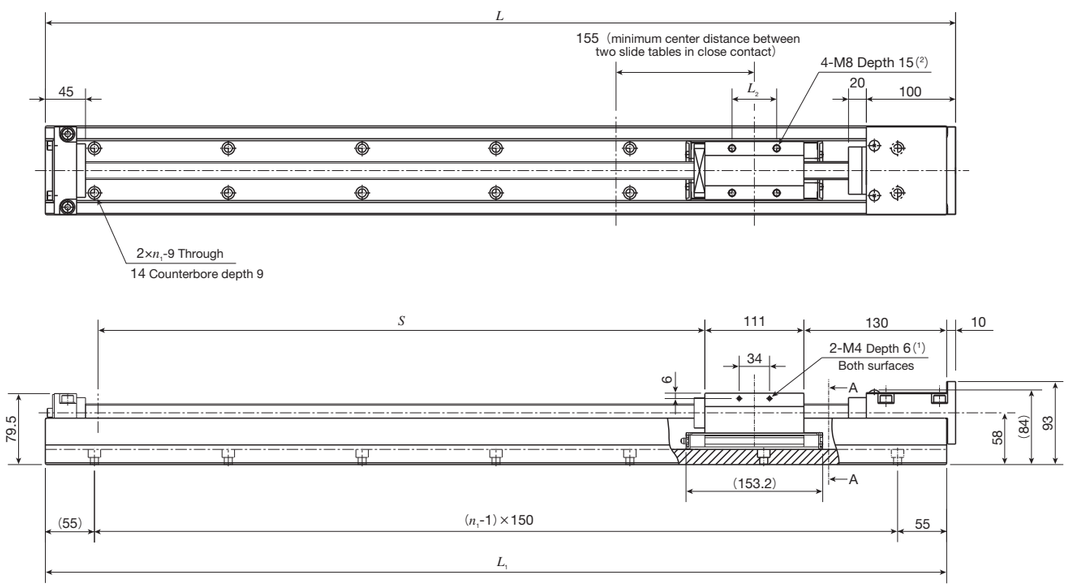

A-A Sectional dimension

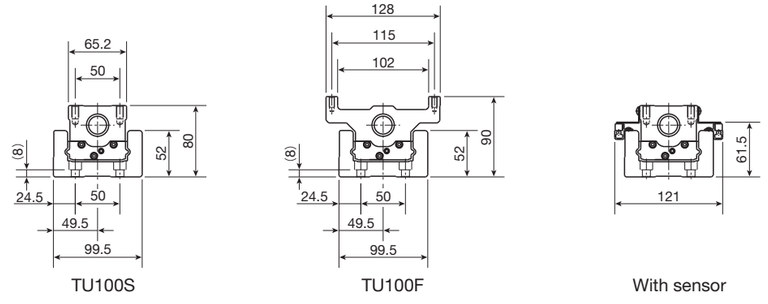

Notes (1) No thread hole is prepared for TU100F.
(2) TU100F is M6 depth 12.
Remark: M12 female threads for hanging bolt are provided on the track rail.

Dimensions

unit: mm

Model and size	Length of track rail L_1	Overall length L	Stroke length S (1)	n_1	L_2	Mass of slide table kg	Mass(2) kg
TU100S	1 010	1 020	690(550)	7	50	2.6	28.0
	1 160	1 170	840(700)	8			31.6
	1 310	1 320	990(850)	9			35.1
	1 460	1 470	1 140(1 000)	10			38.8
TU100F	1 010	1 020	690(550)	7	46	3.7	29.1
	1 160	1 170	840(700)	8			32.7
	1 310	1 320	990(850)	9			36.2
	1 460	1 470	1 140(1 000)	10			39.9

Notes (1) The value indicates the allowable stroke length when limit sensors are mounted. The value in ( ) represents dimension for two slide tables in close contact.
(2) The value shows the mass of the entire table with one slide table.

TU130

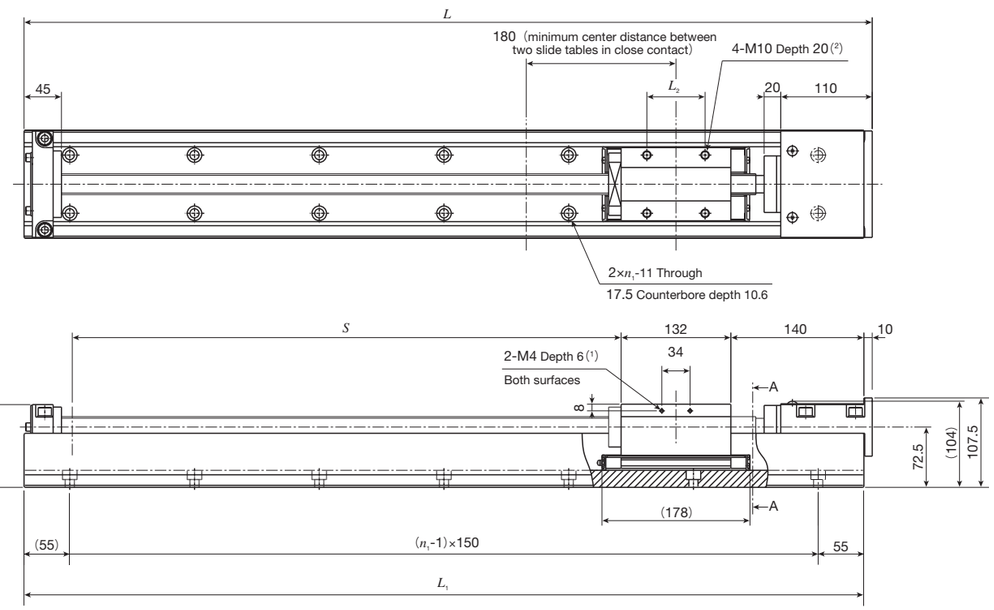

A-A Sectional dimension

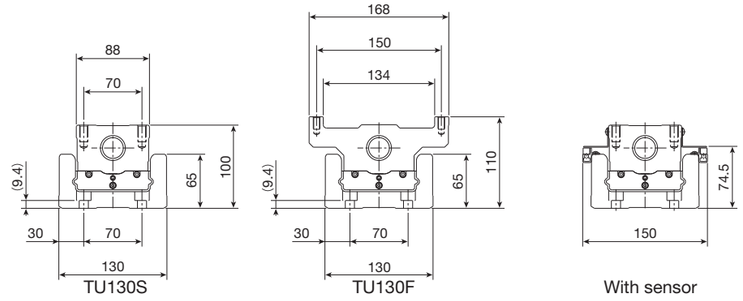

Notes (1) No thread hole is prepared for TU130F.
(2) TU130F is M8 depth 15.
Remark: M12 female threads for hanging bolt are provided on the track rail.

Dimensions

unit: mm

Model and size	Length of track rail L_1	Overall length L	Stroke length S (1)	n_1	L_2	Mass of slide table kg	Mass(2) kg
TU130S	1 010	1 020	660(490)	7	70	5.4	45.2
	1 160	1 170	810(640)	8			50.6
	1 310	1 320	960(790)	9			56.2
	1 460	1 470	1 110(940)	10			61.8
	1 610	1 620	1 260(1 090)	11			67.3
TU130F	1 010	1 020	660(490)	7	50	7.8	47.6
	1 160	1 170	810(640)	8			53.0
	1 310	1 320	960(790)	9			58.6
	1 460	1 470	1 110(940)	10			64.2
	1 610	1 620	1 260(1 090)	11			69.7

Notes (1) The value indicates the allowable stroke length when limit sensors are mounted. The value in ( ) represents dimension for two slide tables in close contact.
(2) The value shows the mass of the entire table with one slide table.

1N=0.102kgf=0.2248lbs.
1mm=0.03937inch

TU40 Motor folding back specification

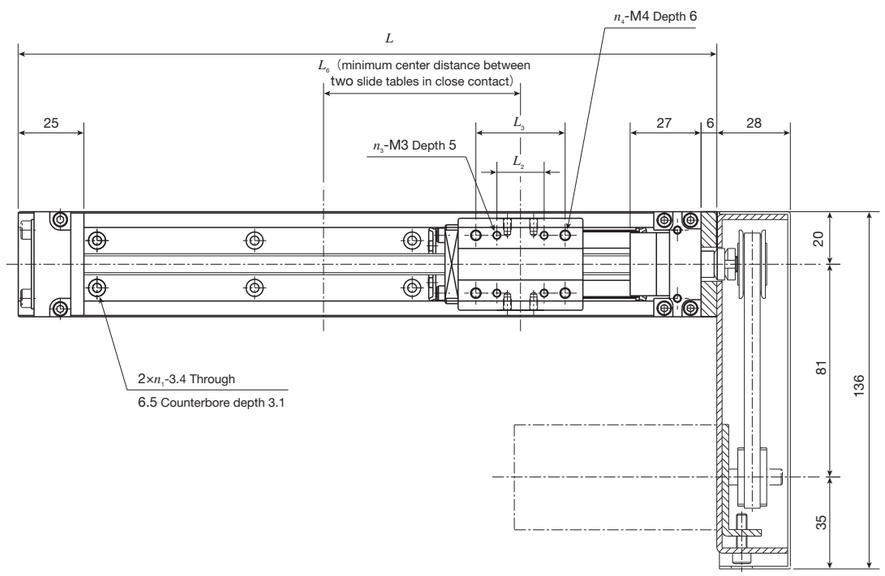

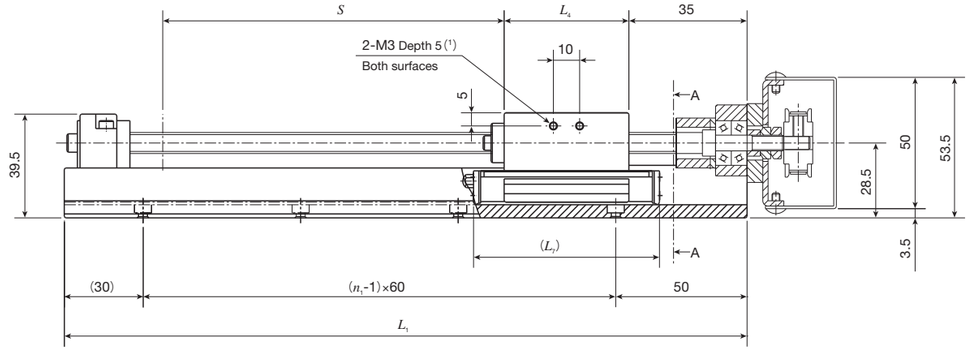

A-A Sectional dimension

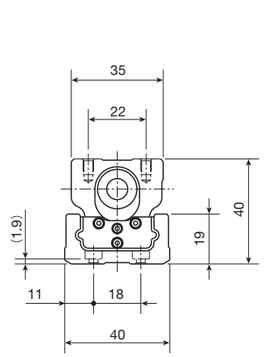

TU40C, TU40S, TU40G

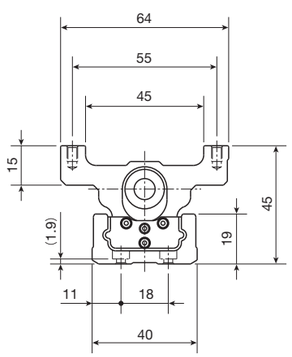

TU40F

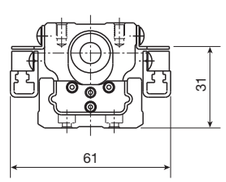

With sensor

Note (1) No thread hole is prepared for TU40F.
Remark: Parts for motor attachment are appended. This figure indicates a finished state after the motor attachment is assembled by the customer.

Dimensions of slide table

unit: mm

Model and size	L_2	L_3	L_4	L_6	L_7	n_3	n_4	Mass kg
TU40C	–	–	19.5	45	43	–	2	0.1
TU40S	–	18	31.5	60	55	–	4	0.2
TU40G	18	34	47.5	75	71	4	4	0.3
TU40F	–	18	31.5	60	55	–	4	0.3

Dimensions of track rail

unit: mm

Length of track rail L_1	Overall length L	n_1	Stroke length S(1)			Mass(2) kg			
			TU40C	TU40S TU40F	TU40G	TU40C	TU40S	TU40G	TU40F
140	146	2	45(–)	30(–)	– (–)	1.0	1.1	–	1.2
200	206	3	105(70)	90(40)	80(–)	1.2	1.3	1.4	1.4
260	266	4	165(130)	150(100)	140(70)	1.4	1.5	1.6	1.6
320	326	5	225(190)	210(160)	200(130)	1.6	1.7	1.8	1.8
380	386	6	285(250)	270(220)	260(190)	1.8	1.9	2.0	2.0

Notes (1) The value indicates the allowable stroke length when limit sensors are mounted. The value in ( ) represents dimension for two slide tables in close contact.
(2) The value shows the mass of the entire table with one slide table.

1N=0.102kgf=0.2248lbs.
1mm=0.03937inch

TU50 Motor folding back specification

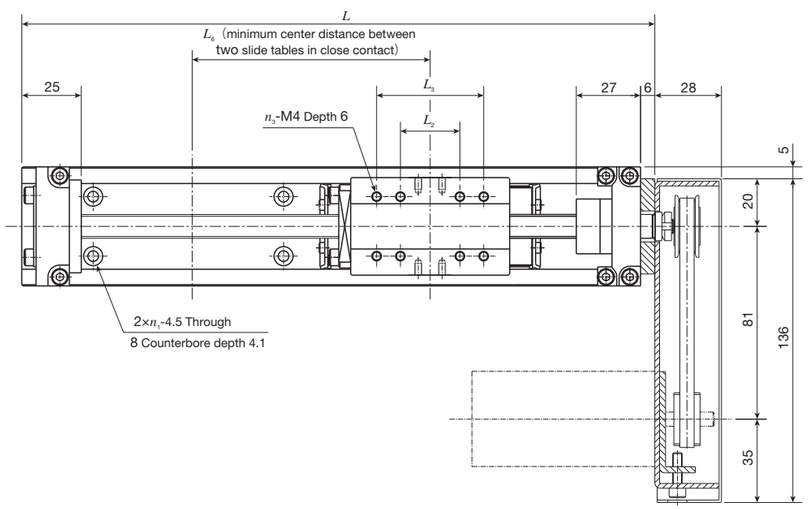

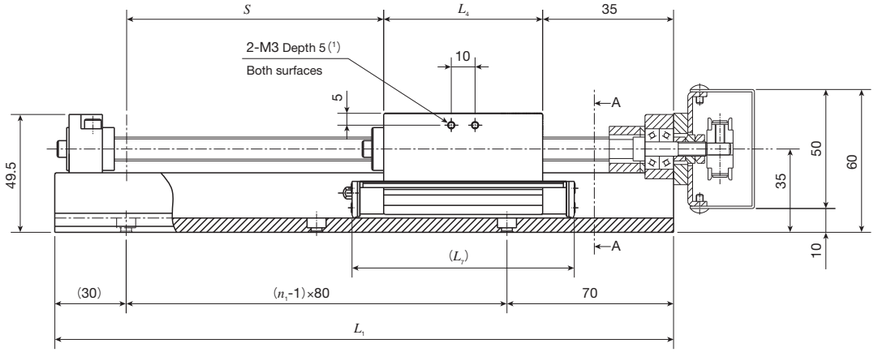

A-A Sectional dimension

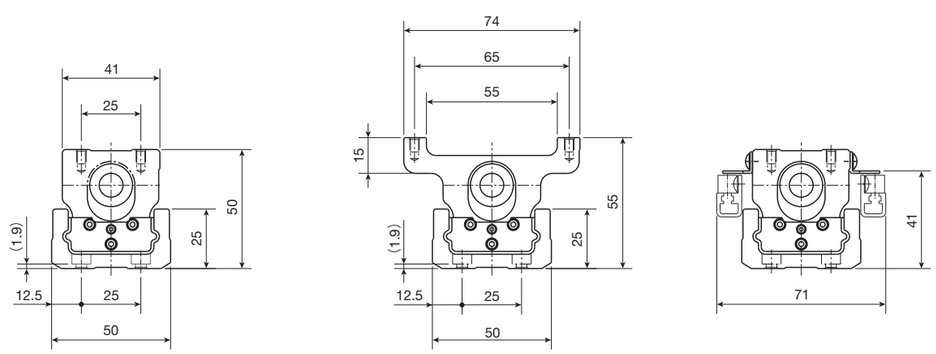

TU50C, TU50S, TU50G　　TU50F　　With sensor

Note (1) No thread hole is prepared for TU50F.
Remark: Parts for motor attachment are appended. This figure indicates a finished state after the motor attachment is assembled by the customer.

Dimensions of slide table　　unit: mm

Model and size	L_2	L_3	L_4	L_6	L_7	n_3	Mass kg
TU50C	–	–	23.8	55	51	2	0.2
TU50S	25	–	42.8	75	70	4	0.4
TU50G	25	45	66.8	100	94	8	0.7
TU50F	25	–	42.8	75	70	4	0.5

Dimensions of track rail　　unit: mm

Length of track rail L_1	Overall length L	n_1	Stroke length S(1)			Mass(2) kg			
			TU50C	TU50S TU50F	TU50G	TU50C	TU50S	TU50G	TU50F
180	186	2	80(–)	60(–)	– (–)	1.6	1.8	–	1.9
260	266	3	160(115)	140(75)	120(–)	1.9	2.1	2.4	2.2
340	346	4	240(195)	220(155)	200(110)	2.3	2.5	2.8	2.6
420	426	5	320(275)	300(235)	280(190)	2.7	2.9	3.2	3.0
500	506	6	400(355)	380(315)	360(270)	3.1	3.3	3.6	3.4
580	586	7	480(435)	460(395)	440(350)	3.5	3.7	3.9	3.8
660	666	8	560(515)	540(475)	520(430)	3.8	4.0	4.3	4.1

Notes (1) The value indicates the allowable stroke length when limit sensors are mounted. The value in ( ) represents dimension for two slide tables in close contact.
(2) The value shows the mass of the entire table with one slide table.

1N=0.102kgf=0.2248lbs.
1mm=0.03937inch

TU60 Motor folding back specification

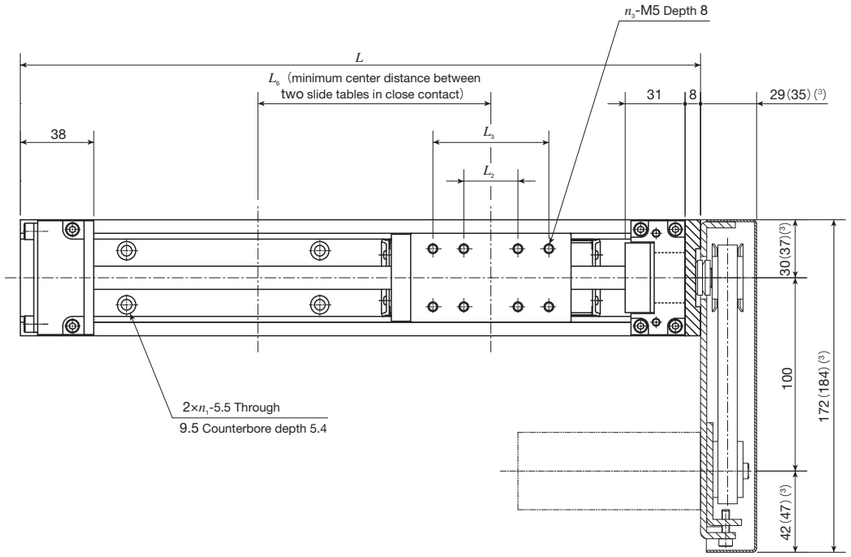

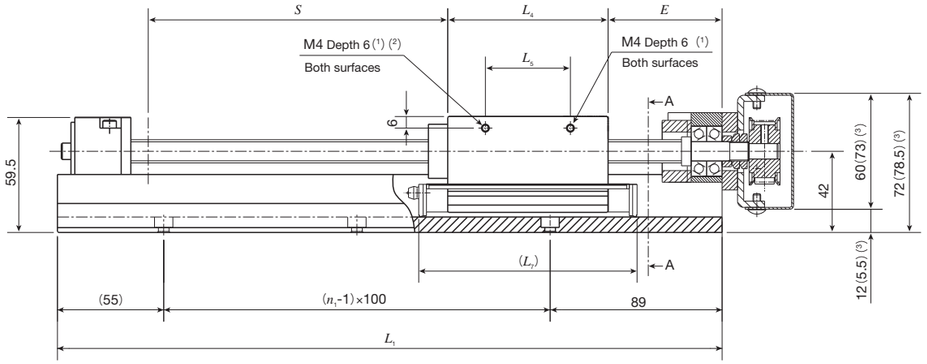

A-A Sectional dimension

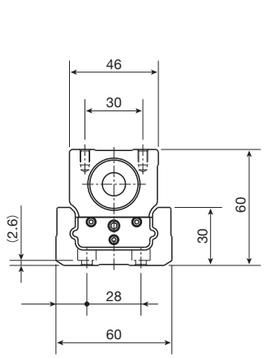

TU60C, TU60S, TU60G

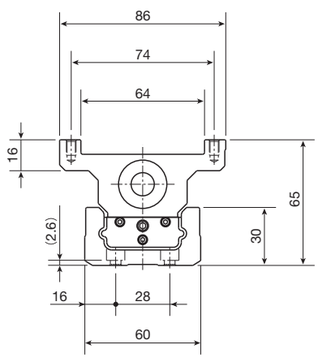

TU60FC, TU60F, TU60FG

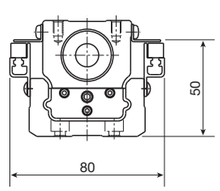

With sensor

Notes (1) No thread hole is prepared for TU60FC, TU60F, TU60FG.
(2) TU60C is ϕ3 depth 2.
(3) The dimension in ( ) is applied to motor attachment codes AT117 and AT122.
Remark: Parts for motor attachment are appended. This figure indicates a finished state after the motor attachment is assembled by the customer.

<Ball screw lead 5mm, 10mm>

Dimensions of slide table

unit: mm

Model and size	L_2	L_3	L_4	L_5	L_6	L_7	n_3	E	Mass kg
TU60C	–	–	27.4	17.4	65	58	2	44	0.3
TU60S	28	–	52.4	18	90	83	4	39	0.6
TU60G	28	60	83	44	120.5	113	8	39	1.0
TU60FC	–	–	27.4	–	65	58	2	44	0.4
TU60F	28	–	52.4	–	90	83	4	39	0.8
TU60FG	28	60	83	–	120.5	113	8	39	1.3

Dimensions of track rail

unit: mm

Length of track rail L_1	Overall length L	n_1	Stroke length S(1)			Mass(2) kg					
			TU60C TU60FC	TU60S TU60F	TU60G TU60FG	TU60C	TU60S	TU60G	TU60FC	TU60F	TU60FG
244	252	2	110(50)	95(–)	– (–)	3.6	3.9	–	3.7	4.1	–
344	352	3	210(150)	195(115)	165(–)	4.3	4.6	5.0	4.4	4.8	5.3
444	452	4	310(250)	295(215)	265(155)	5.1	5.4	5.7	5.2	5.5	6.0
544	552	5	410(350)	395(315)	365(255)	5.8	6.1	6.4	5.9	6.3	6.7
644	652	6	510(450)	495(415)	465(355)	6.6	6.8	7.2	6.7	7.0	7.5
744	752	7	610(550)	595(515)	565(455)	7.5	7.6	7.9	7.6	7.8	8.2

Notes (1) The value indicates the allowable stroke length when limit sensors are mounted. The value in ( ) represents dimension for two slide tables in close contact.
(2) The value shows the mass of the entire table with one slide table.

<Ball screw lead 20mm>

Dimensions of slide table

unit: mm

Model and size	L_2	L_3	L_4	L_5	L_6	L_7	n_3	E	Mass kg
TU60C	–	–	27.4	17.4	65	58	2	64	0.3
TU60S	28	–	52.4	18	90	83	4	39	0.6
TU60G	28	60	83	44	120.5	113	8	39	1.0
TU60FC	–	–	27.4	–	65	58	2	64	0.4
TU60F	28	–	52.4	–	90	83	4	39	0.8
TU60FG	28	60	83	–	120.5	113	8	39	1.3

Dimensions of track rail

unit: mm

Length of track rail L_1	Overall length L	n_1	Stroke length S(1)			Mass(2) kg					
			TU60C TU60FC	TU60S TU60F	TU60G TU60FG	TU60C	TU60S	TU60G	TU60FC	TU60F	TU60FG
244	252	2	95(–)	95(–)	– (–)	3.7	4.0	–	3.8	4.2	–
344	352	3	195(135)	195(115)	165(–)	4.4	4.7	5.1	4.5	4.9	5.4
444	452	4	295(235)	295(215)	265(155)	5.2	5.5	5.8	5.3	5.6	6.1
544	552	5	395(335)	395(315)	365(255)	5.9	6.2	6.5	6.0	6.4	6.8
644	652	6	495(435)	495(415)	465(355)	6.7	6.9	7.3	6.8	7.1	7.6
744	752	7	595(535)	595(515)	565(455)	7.6	7.7	8.0	7.7	7.9	8.3

Notes (1) The value indicates the allowable stroke length when limit sensors are mounted. The value in ( ) represents dimension for two slide tables in close contact.
(2) The value shows the mass of the entire table with one slide table.

1N=0.102kgf=0.2248lbs.
1mm=0.03937inch

TU86 Motor folding back specification

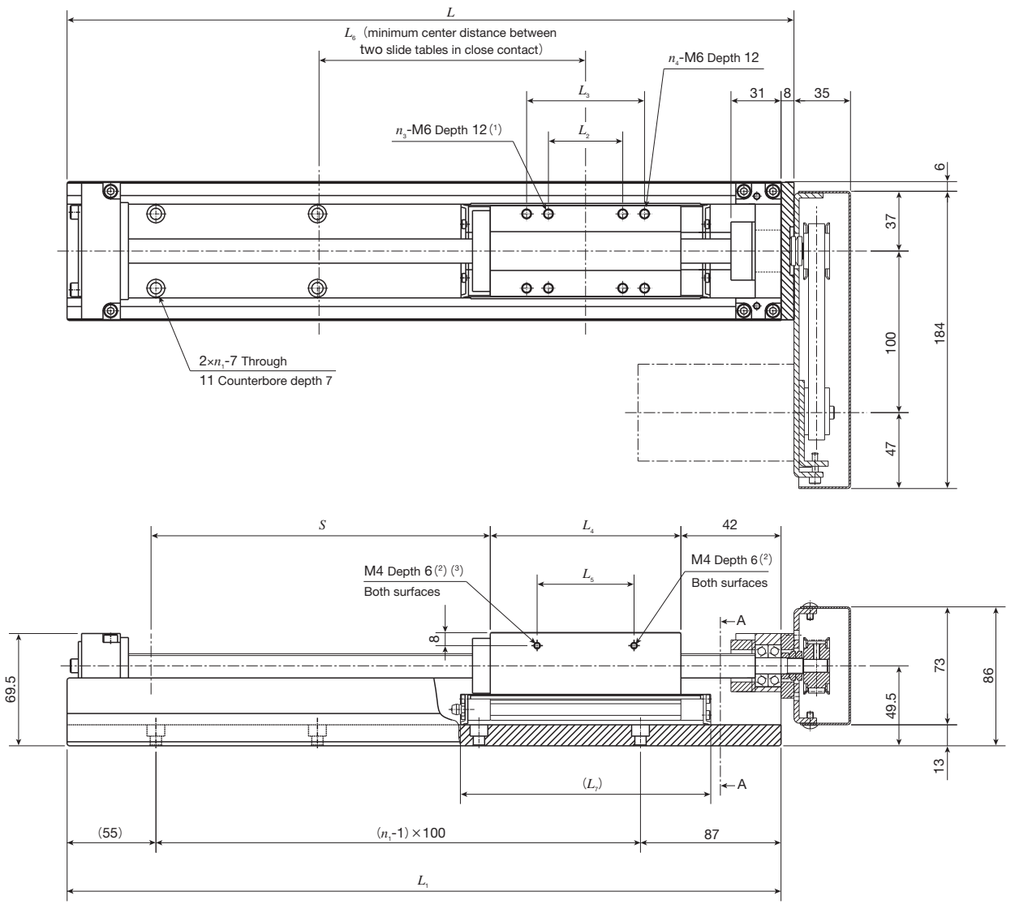

A-A Sectional dimension

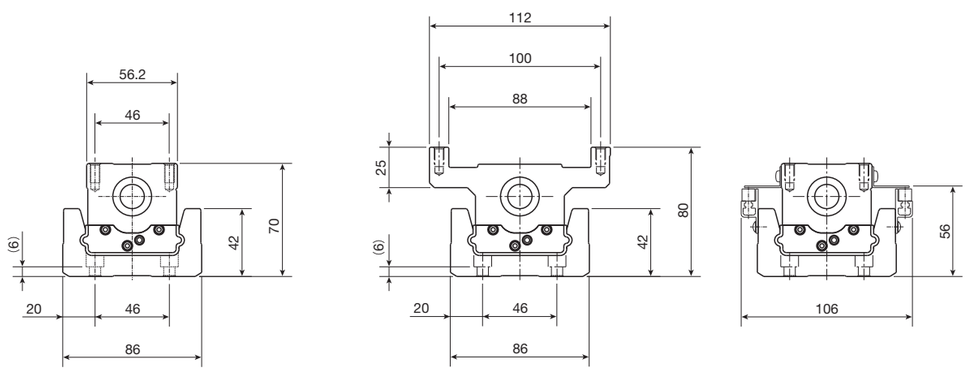

TU86C, TU86S, TU86G　　TU86FC, TU86F, TU86FG　　With sensor

Notes (1) TU86F is M5 depth 12.
(2) No thread hole is prepared for TU86FC, TU86F, TU86FG.
(3) TU86C is ϕ3 depth 2.
Remark: Parts for motor attachment are appended. This figure indicates a finished state after the motor attachment is assembled by the customer.

Dimensions of slide table　　unit: mm

Model and size	L_2	L_3	L_4	L_5	L_6	L_7	n_3	n_4	Mass kg
TU86C	–	–	43	30	90	80	2	–	0.7
TU86S	46	–	93	63	140	130	4	–	1.7
TU86G	46	73	118	60	165	155	4	4	2.2
TU86FC	–	–	43	–	90	80	2	–	1.1
TU86F	28	46	93	–	140	130	4	4	2.3
TU86FG	46	73	118	–	165	155	4	4	3.0

Dimensions of track rail　　unit: mm

Length of track rail L_1	Overall length L	n_1	Stroke length S(1)			Mass(2) kg					
			TU86C TU86FC	TU86S TU86F	TU86G TU86FG	TU86C	TU86S	TU86G	TU86FC	TU86F	TU86FG
442	450	4	295(215)	245(115)	220(–)	10.3	11.3	11.8	10.7	11.9	12.6
542	550	5	395(315)	345(215)	320(165)	11.2	12.1	12.6	11.6	12.8	13.4
642	650	6	495(415)	445(315)	420(265)	12.7	13.6	14.2	13.1	14.3	15.0
742	750	7	595(515)	545(415)	520(365)	14.2	15.1	15.7	14.6	15.8	16.5
842	850	8	695(615)	645(515)	620(465)	15.4	16.3	16.8	15.8	17.0	17.6
942	950	9	795(715)	745(615)	720(565)	16.9	17.8	18.3	17.3	18.5	19.1
1042	1 050	10	895(815)	845(715)	820(665)	18.4	19.3	19.8	18.8	20.0	20.6
1142	1 150	11	995(915)	945(815)	920(765)	19.9	20.8	21.4	20.3	21.5	22.2

Notes (1) The value indicates the allowable stroke length when limit sensors are mounted. The value in ( ) represents dimension for two slide tables in close contact.
(2) The value shows the mass of the entire table with one slide table.

1N=0.102kgf=0.2248lbs.
1mm=0.03937inch

TU60S Table with bellows

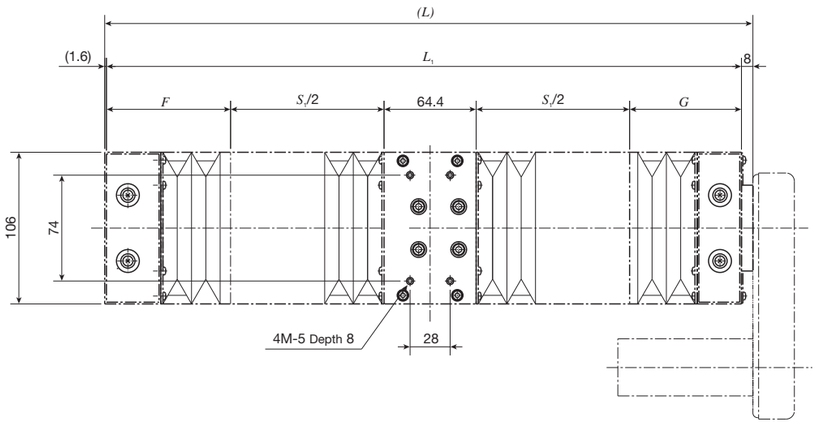

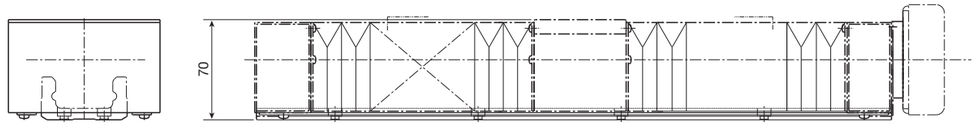

unit: mm

Length of track rail L_1	Overall length (L)	Limit stroke length (1) S_1	Stroke length (2) S	F	G
290 (244)	299.6(253.6)	73.6(68.6)	65(60)	59(59)	93(52)
390 (344)	399.6(353.6)	147.6(142.6)	140(135)	72(72)	106(65)
490 (444)	499.6(453.6)	219.6(214.6)	210(205)	86(86)	120(79)
590 (544)	599.6(553.6)	293.6(288.6)	285(280)	99(99)	133(92)
690 (644)	699.6(653.6)	393.6(388.6)	380(375)	99(99)	133(92)
790 (744)	799.6(753.6)	465.6(460.6)	455(450)	113(113)	147(106)

Notes (1) The value indicates the limit value of stroke with which the slide table can move.
(2) The value indicates the allowable stroke length when limit sensors are mounted.
Remarks 1. The values in ( ) are applied to table with bellows of motor folding back specification.
2. For the track rail mounting dimensions, please see the dimension table for TU60.
3. Applicable to tables with C-Lube.

TU86S Table with bellows

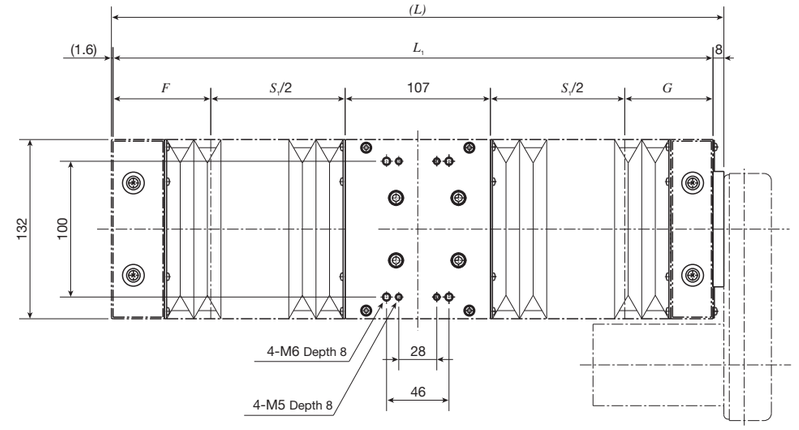

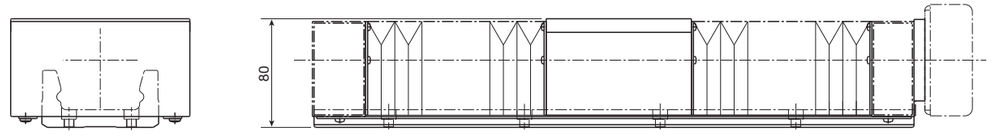

unit: mm

Length of track rail L_1	Overall length (L)	Limit stroke length (1) S_1	Stroke length (2) S	F	G
490(442)	499.6(451.6)	203(198)	195(190)	72(72)	108(65)
590(542)	599.6(551.6)	275(270)	265(260)	86(86)	122(79)
690(642)	699.6(651.6)	349(344)	340(335)	99(99)	135(92)
790(742)	799.6(751.6)	421(416)	410(405)	113(113)	149(106)
890(842)	899.6(851.6)	521(516)	510(505)	113(113)	149(106)
990(942)	999.6(951.6)	593(588)	580(575)	127(127)	163(120)
1 090(1 042)	1 099.6(1 051.6)	667(662)	655(650)	140(140)	176(133)
1 190(1 142)	1 199.6(1 151.6)	739(734)	730(725)	154(154)	190(147)

Notes (1) The value indicates the limit value of stroke with which the slide table can move.
(2) The value indicates the allowable stroke length when limit sensors are mounted.
Remarks 1. The values in ( ) are applied to table with bellows of motor folding back specification.
2. For the track rail mounting dimensions, please see the dimension table for TU86.
3. Applicable to tables with C-Lube.

1N=0.102kgf=0.2248lbs.
1mm=0.03937inch

IKO Precision Positioning Table TU

TU40, TU50 Table with C-Lube

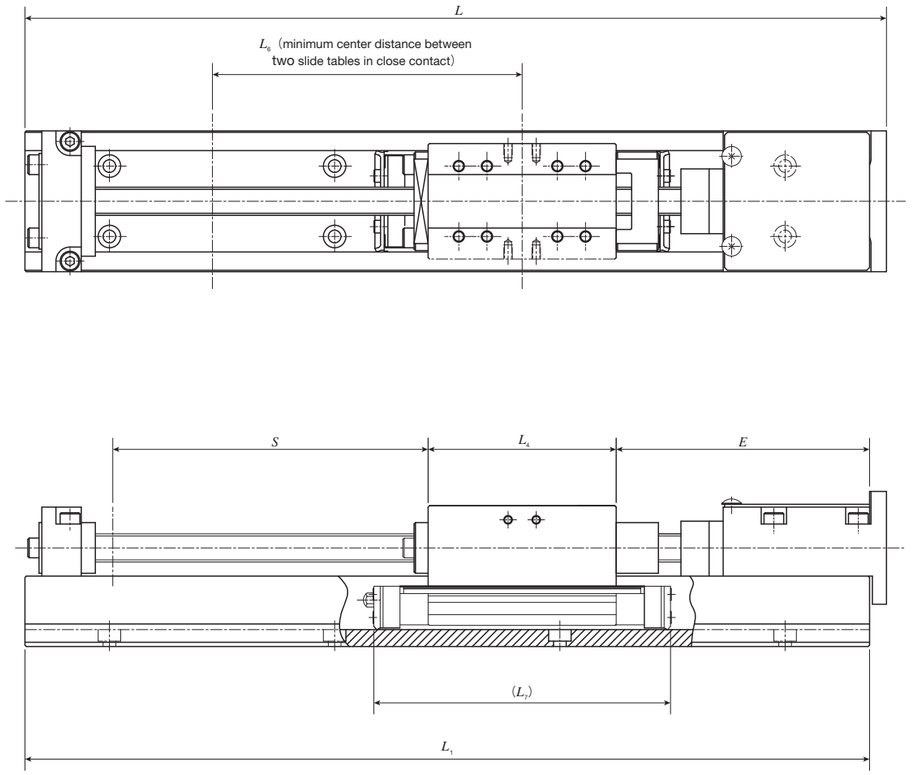

unit: mm

Model and size	Length of track rail L_1	Overall length L	Stroke length (1) S	E	L_4	L_6	L_7
TU40C	180	186	30(–)	90	19.5	60	55
	240	246	90(40)				
	300	306	150(100)				
	360	366	210(160)				
	420	426	270(220)				
TU40S TU40F	240	246	80(–)	90	31.5	70	67
	300	306	140(75)				
	360	366	200(135)				
	420	426	260(195)				
TU40G	240	246	60(–)	90	47.5	85	83
	300	306	120(–)				
	360	366	180(105)				
	420	426	240(165)				

Model and size	Length of track rail L_1	Overall length L	Stroke length (1) S	E	L_4	L_6	L_7
TU50C	220	226	65(–)	90	23.8	65	63
	300	306	145(90)				
	380	386	225(170)				
	460	466	305(250)				
	540	546	385(330)				
	620	626	465(410)				
	700	706	545(490)				
TU50S TU50F	220	226	45(–)	90	42.8	85	82
	300	306	125(50)				
	380	386	205(130)				
	460	466	285(210)				
	540	546	365(290)				
	620	626	445(370)				
	700	706	525(450)				
TU50G	300	306	100(–)	90	66.8	110	106
	380	386	180(–)				
	460	466	260(160)				
	540	546	340(240)				
	620	626	420(320)				
	700	706	500(400)				

Note (1) The value indicates the allowable stroke length when limit sensors are mounted. The value in ( ) represents dimension for two slide tables in close contact.

Remark: For dimensions of the slide table and track rail, please see the dimension table for each size.

1N=0.102kgf=0.2248lbs.
1mm=0.03937inch

IKO Precision Positioning Table TU

TU60, TU86, TU100, TU130 Table with C-Lube

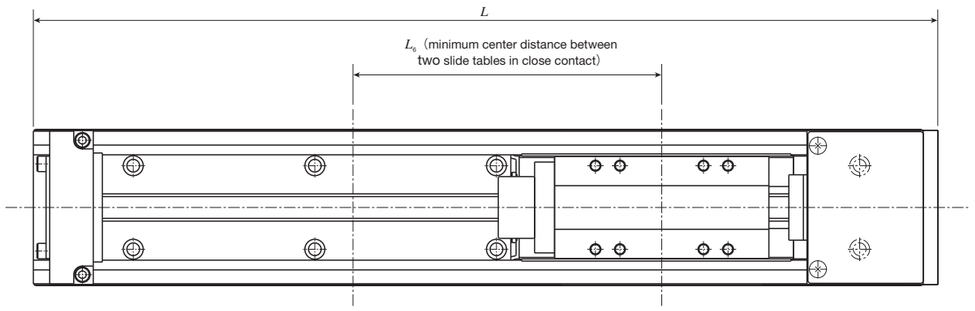

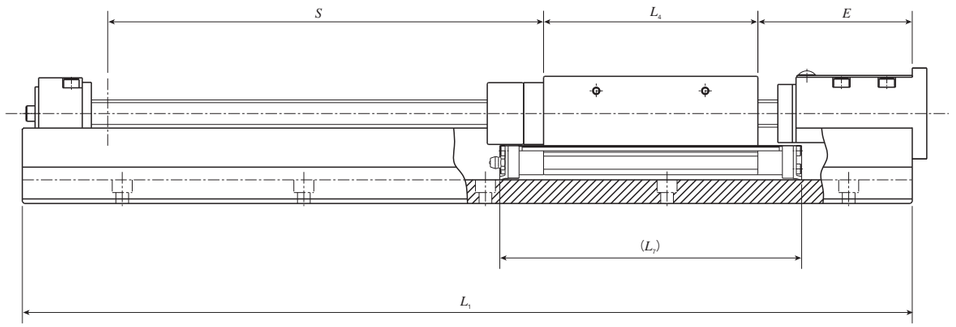

unit: mm

Model and size	Length of track rail L_1	Overall length L	Stroke length (1) S		E		L_4	L_6	L_7
			Lead 5mm Lead 10mm	Lead 20mm	Lead 5mm Lead 10mm	Lead 20mm			
TU60C TU60FC	290	298	90(−)	70(−)	100	120	27.4	75	70
	390	398	190(140)	170(120)					
	490	498	290(240)	270(220)					
	590	598	390(340)	370(320)					
	690	698	490(440)	470(420)					
	790	798	590(540)	570(520)					
TU60S TU60F	290	298	90(−)	70(−)	80	95	52.4	100	95
	390	398	190(110)	170(100)					
	490	498	290(210)	270(200)					
	590	598	390(310)	370(300)					
	690	698	490(410)	470(400)					
	790	798	590(510)	570(500)					
TU60G TU60FG	290	298	− (−)	− (−)	80	85	83	130	125
	390	398	160(−)	155(−)					
	490	498	260(150)	255(150)					
	590	598	360(250)	355(250)					
	690	698	460(350)	455(350)					
	790	798	560(450)	555(450)					

Model and size	Length of track rail L_1	Overall length L	Stroke length (1) S	E	L_4	L_6	L_7
TU86C TU86FC	490	498	260(190)	110	43	95	92
	590	598	360(290)				
	690	698	460(390)				
	790	798	560(490)				
	890	898	660(590)				
	990	998	760(690)				
	1 090	1 098	860(790)				
	1 190	1 198	960(890)				
TU86S TU86F	490	498	230(120)	85	93	145	142
	590	598	330(220)				
	690	698	430(320)				
	790	798	530(420)				
	890	898	630(520)				
	990	998	730(620)				
	1 090	1 098	830(720)				
	1 190	1 198	930(820)				
TU86G TU86FG	490	498	210(−)	85	118	170	167
	590	598	310(170)				
	690	698	410(270)				
	790	798	510(370)				
	890	898	610(470)				
	990	998	710(570)				
	1 090	1 098	810(670)				
	1 190	1 198	910(770)				
TU100S TU100F	1 010	1 020	670(540)	130	111	170	166
	1 160	1 170	820(690)				
	1 310	1 320	970(840)				
	1 460	1 470	1 120(990)				
TU130S TU130F	1 010	1 020	630(480)	140	132	195	190
	1 160	1 170	780(630)				
	1 310	1 320	930(780)				
	1 460	1 470	1 080(930)				
	1 610	1 620	1 230(1 080)				

Note (1) The value indicates the allowable stroke length when limit sensors are mounted. The value in ( ) represents dimension for two slide tables in close contact.

Remark: For dimensions of the slide table and track rail, please see the dimension table for each size.

1N=0.102kgf=0.2248lbs.
1mm=0.03937inch

TU40, TU50 Table with C-Lube (Motor folding back specification)

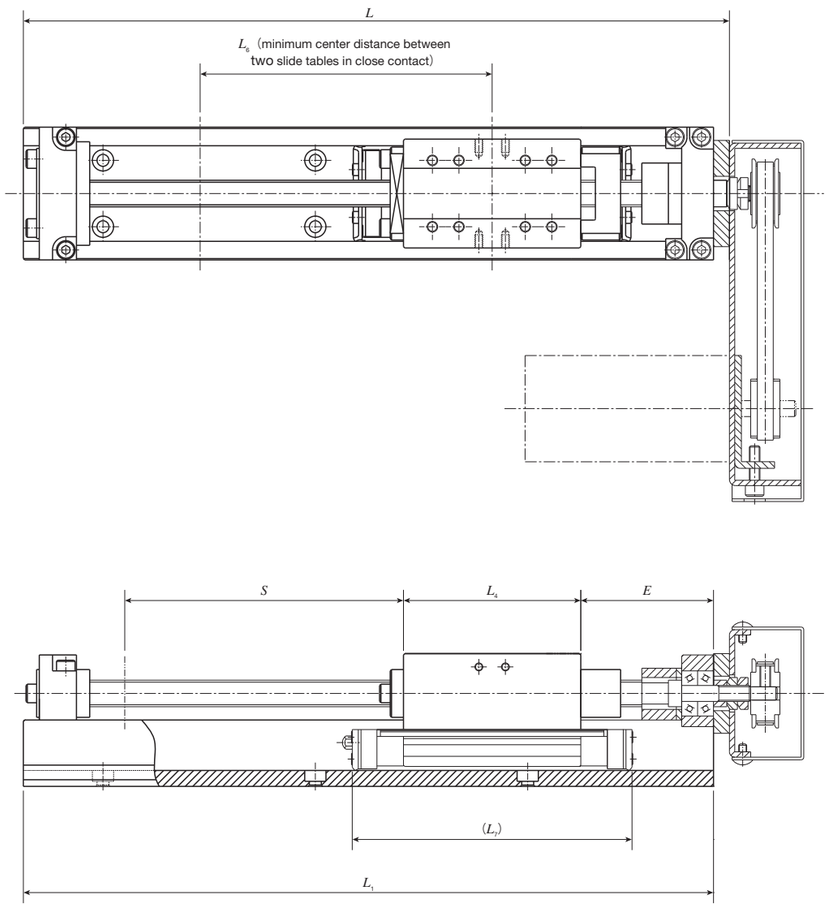

unit: mm

Model and size	Length of track rail L_1	Overall length L	Stroke length (1) S	E	L_4	L_6	L_7
TU40C	140	146	30(–)	50	19.5	60	55
	200	206	90(40)				
	260	266	150(100)				
	320	326	210(160)				
	380	386	270(220)				
TU40S TU40F	200	206	80(–)	50	31.5	70	67
	260	266	140(75)				
	320	326	200(135)				
	380	386	260(195)				
TU40G	200	206	60(–)	50	47.5	85	83
	260	266	120(–)				
	320	326	180(105)				
	380	386	240(165)				

Model and size	Length of track rail L_1	Overall length L	Stroke length (1) S	E	L_4	L_6	L_7
TU50C	180	186	65(–)	50	23.8	65	63
	260	266	145(90)				
	340	346	225(170)				
	420	426	305(250)				
	500	506	385(330)				
	580	586	465(410)				
	660	666	545(490)				
TU50S TU50F	180	186	45(–)	50	42.8	85	82
	260	266	125(50)				
	340	346	205(130)				
	420	426	285(210)				
	500	506	365(290)				
	580	586	445(370)				
	660	666	525(450)				
TU50G	260	266	100(–)	50	66.8	110	106
	340	346	180(80)				
	420	426	260(160)				
	500	506	340(240)				
	580	586	420(320)				
	660	666	500(400)				

Note (1) The value indicates the allowable stroke length when limit sensors are mounted. The value in ( ) represents dimension for two slide tables in close contact.

Remarks 1. Parts for motor attachment are appended. This figure indicates a finished state after the motor attachment is assembled by the customer.
2. For dimensions of the slide table and track rail, please see the dimension table for each size.

1N=0.102kgf=0.2248lbs.
1mm=0.03937inch

IKO Precision Positioning Table TU

TU60, TU86 Table with C-Lube (Motor folding back specification)

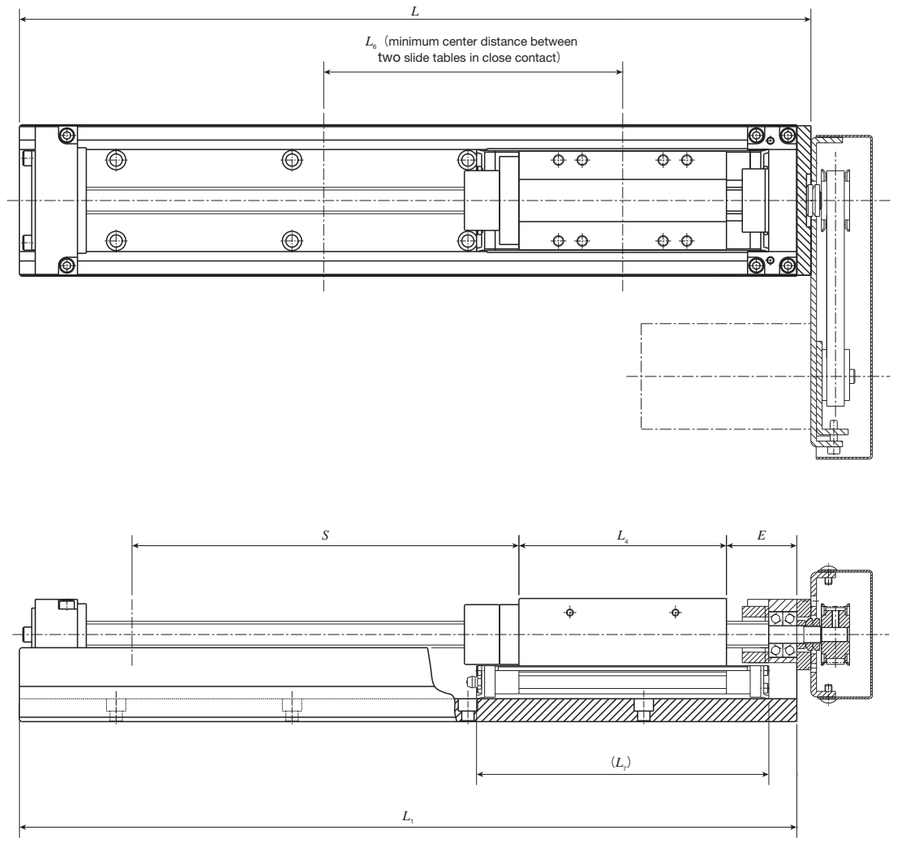

unit: mm

Model and size	Length of track rail L_1	Overall length L	Stroke length (1) S		E		L_4	L_6	L_7
			Lead 5mm Lead 10mm	Lead 20mm	Lead 5mm Lead 10mm	Lead 20mm			
TU60C TU60FC	244	252	90(−)	70(−)	55	74	27.4	75	70
	344	352	190(140)	170(120)					
	444	452	290(240)	270(220)					
	544	552	390(340)	370(320)					
	644	652	490(440)	470(420)					
	744	752	590(540)	570(520)					
TU60S TU60F	244	252	80(−)	70(−)	40	49	52.4	100	95
	344	352	180(110)	170(100)					
	444	452	280(210)	270(200)					
	544	552	380(310)	370(300)					
	644	652	480(410)	470(400)					
	744	752	580(510)	570(500)					
TU60G TU60FG	244	252	− (−)	− (−)	40	39	83	130	125
	344	352	150(−)	155(−)					
	444	452	250(150)	255(150)					
	544	552	350(250)	355(250)					
	644	652	450(350)	455(350)					
	744	752	550(450)	555(450)					

Model and size	Length of track rail L_1	Overall length L	Stroke length (1) S	E	L_4	L_6	L_7
TU86C TU86FC	442	450	250(190)	70	43	95	92
	542	550	350(290)				
	642	650	450(390)				
	742	750	550(490)				
	842	850	650(590)				
	942	950	750(690)				
	1 042	1 050	850(790)				
	1 142	1 150	950(890)				
TU86S TU86F	442	450	230(120)	40	93	145	142
	542	550	330(220)				
	642	650	430(320)				
	742	750	530(420)				
	842	850	630(520)				
	942	950	730(620)				
	1 042	1 050	830(720)				
	1 142	1 150	930(820)				
TU86G TU86FG	442	450	210(−)	40	118	170	167
	542	550	310(170)				
	642	650	410(270)				
	742	750	510(370)				
	842	850	610(470)				
	942	950	710(570)				
	1 042	1 050	810(670)				
	1 142	1 150	910(770)				

Note (1) The value indicates the allowable stroke length when limit sensors are mounted. The value in ( ) represents dimension for two slide tables in close contact.

Remarks 1. Parts for motor attachment are appended. This figure indicates a finished state after the motor attachment is assembled by the customer.
2. For dimensions of the slide table and track rail, please see the dimension table for each size.

TU

1N=0.102kgf=0.2248lbs.
1mm=0.03937inch

IKO Precision Positioning Table TU

Without ball screw specification

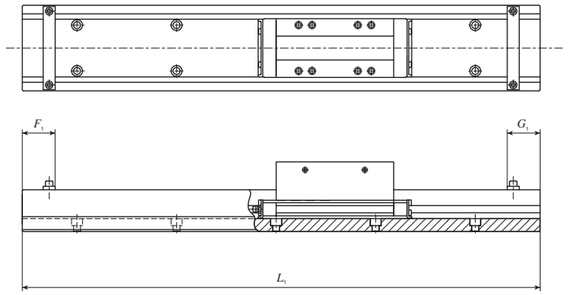

unit: mm

Model and size	Specification of track rail	Length of track rail L_1	Without bridge cover		With bridge cover	
			F_1	G_1	F_1	G_1
TU 25	Without motor folding back	130	14	14	14	14
		165				
		200				
TU 30	Without motor folding back	140	14	14	14	14
		180				
		220				
		260				
		300				
		340				
TU 40	Without motor folding back	180	20	18	20	18
		240				
		300				
		360				
		420				
	Motor folding back specification	140	20	18	20	18
		200				
		260				
		320				
		380				
TU 50	Without motor folding back	220	20	18	20	18
		300				
		380				
		460				
		540				
		620				
		700				
	Motor folding back specification	180	20	18	20	18
		260				
		340				
		420				
		500				
		580				
		660				

Model and size	Specification of track rail	Length of track rail L_1	Without bridge cover		With bridge cover	
			F_1	G_1	F_1	G_1
TU 60	Without motor folding back	290	32	17	35	29
		390				
		490				
		590				
		690				
		790				
		990				
		1190	32	17	–	–
	Motor folding back specification	244	32	28	35	29
		344				
		444				
		544				
		644				
		744				
TU 86	Without motor folding back	490	32	19	35	29
		590				
		690				
		790				
		890				
		990				
		1 090				
		1 190				
		1 390				
		1 590	32	19	–	–
	Motor folding back specification	442	32	28	35	29
		542				
		642				
		742				
		842				
		942				
		1 042				
		1 142				
TU 100	Without motor folding back	1 010	35	34	35	34
		1 160				
		1 310				
		1 460				
TU 130	Without motor folding back	1 010	35	38	35	38
		1 160				
		1 310				
		1 460				
		1 610				

Remark: For dimensions of the slide table and track rail, please see the dimension table for each size.

1N=0.102kgf=0.2248lbs.
1mm=0.03937inch

TSL…M

TSL···M

Ball screw

Linear

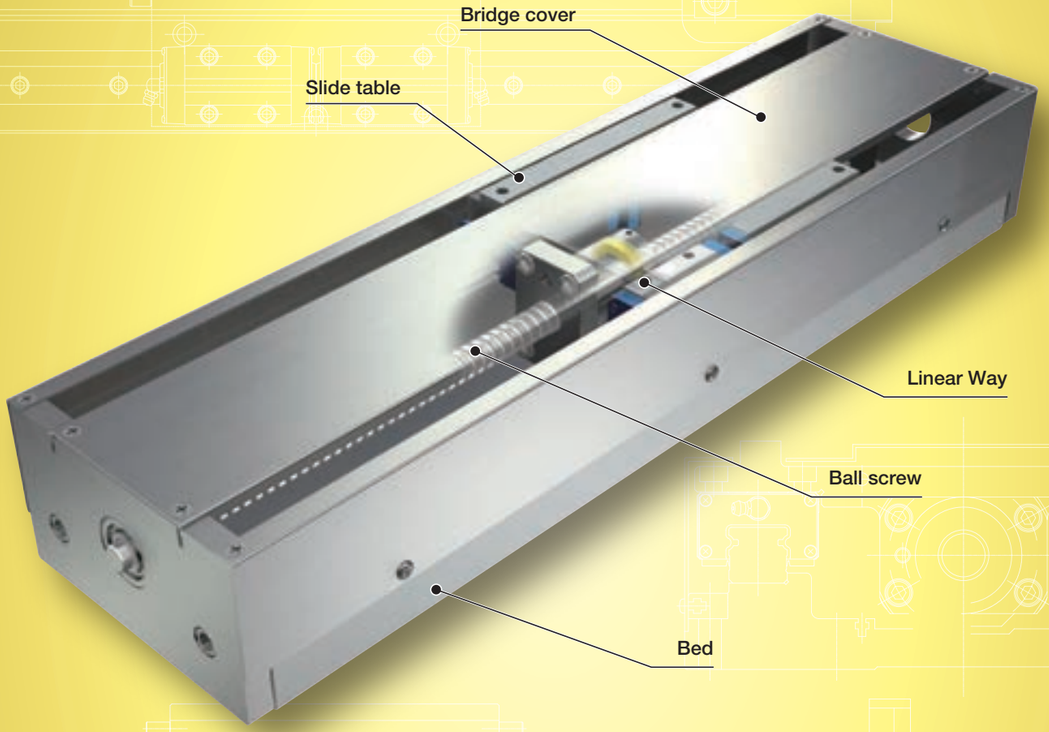

Major product specifications

Driving method	Precision ball screw
Linear motion rolling guide	Linear Way（ball type）
Built-in lubrication part	Lubrication part "C-Lube" is built-in
Material of table and bed	High-strength aluminum alloy
Sensor	Provided as standard

Accuracy

unit: mm

Positioning repeatability	±0.002
Positioning accuracy	0.015～0.060
Lost motion	–
Parallelism in table motion A	–
Parallelism in table motion B	0.020～0.070
Attitude accuracy	–
Straightness	–
Backlash	0.003

Points

● Light weight and long stroke positioning table

1 Light weight and long stroke positioning table configured with the slide table and bed made from high-strength aluminum alloy.

● Stable high running accuracy and positioning accuracy

2 High running accuracy and high accuracy positioning are realized by incorporating 2 sets of Linear Way in parallel, and combining with precision ball screws.

● Configuration of multiaxis system available with XY bracket

3 A series of four sizes from 90mm to 220mm (table width) is available. Multiaxis configuration can be easily realized with XY bracket.

Variation

Shape	Model and size	Table width (mm)	Stroke length (mm)									
			50	100	150	200	250	300	400	500	600	800	1 000
 90mm	TSL 90 M	90	☆	☆	☆	☆	☆	☆	–	–	–	–	–
 120mm	TSL120 M	120	–	☆	☆	☆	☆	☆	☆	☆	☆	–	–
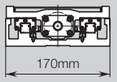 170mm	TSL170 M	170	–	–	☆	☆	☆	☆	☆	☆	–	–	–
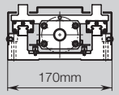 170mm	TSL170SM	170	–	–	–	–	–	☆	☆	☆	☆	☆	☆
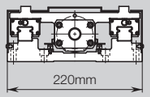 220mm	TSL220 M	220	–	–	–	–	–	☆	☆	☆	☆	☆	☆

1N=0.102kgf=0.2248lbs.
1mm=0.03937inch

Identification Number

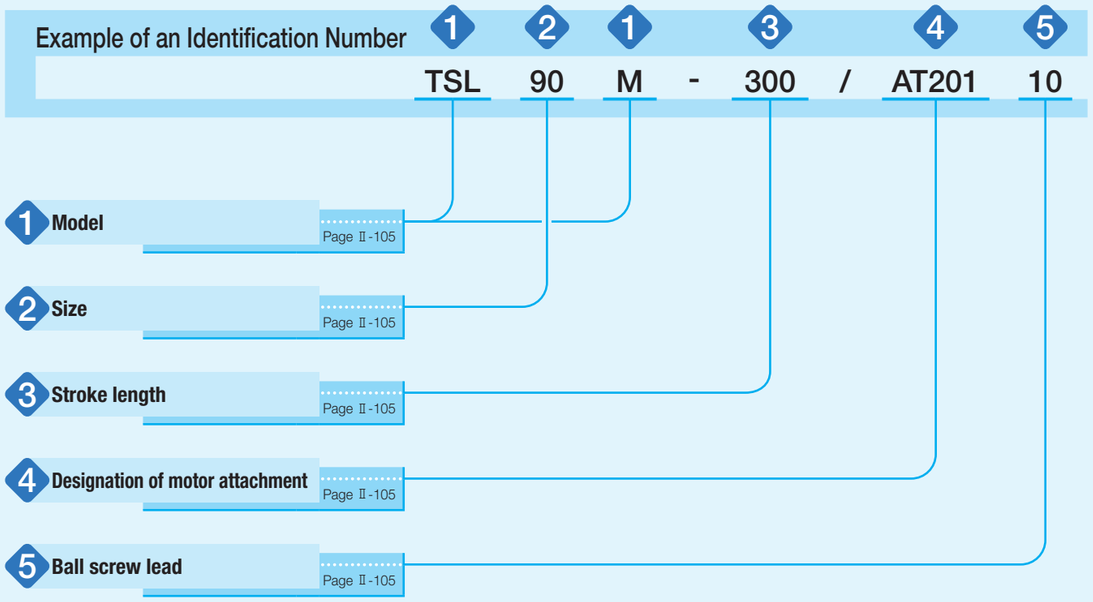

Identification Number and Specification

1 Model

TSL···M: Precision Positioning Table L

2 Size

Size indicates table width.
Select a size from the list of Table 1.

3 Stroke length

Select a stroke length from the list of Table 1.

Table 1 Sizes, table width dimensions, and stroke lengths unit: mm

Model and size	Table width	Stroke length
TSL 90 M	90	50, 100, 150, 200, 250, 300
TSL120 M	120	100, 150, 200, 250, 300, 400, 500, 600
TSL170 M	170	150, 200, 250, 300, 400, 500
TSL170S M	170	300, 400, 500, 600, 800, 1 000
TSL220 M	220	300, 400, 500, 600, 800, 1 000

4 Designation of motor attachment

As for a motor attachment, select it from the list of Table 2.

- Motor should be prepared by customer.
- Please specify motor attachment applicable to motor for use.
- A coupling shown in Table 3 is mounted on the main body before shipment. However, the final position adjustment should be performed by customer since it is only temporarily fixed.
- When specifying an AC servomotor attachment, an origin sensor is not provided.

5 Ball screw lead

5: Lead 5mm
10: Lead 10mm

Table 2 Application of motor attachment

Models of motor to be used					Flange size mm	Motor attachment			
Type	Manufacturer	Series	Model	Rated output W		TSL 90M TSL170M	TSL120M	TSL170SM	TSL220M
AC servo motor	YASKAWA ELECTRIC CORPORATION	Σ-V	SGMJV-01A	100	□40	AT201	AT201	–	–
			SGMAV-01A			AT201	AT201	–	–
			SGMJV-02A	200	□60	–	–	AT202	AT202
			SGMAV-02A			–	–	AT202	AT202
	Mitsubishi Electric Corporation	J4	HG-MR13	100	□40	AT201	AT201	–	–
			HG-KR13			AT201	AT201	–	–
			HG-MR23	200	□60	–	–	AT202	AT202
			HG-KR23			–	–	AT202	AT202
	Panasonic Corporation	MINAS A5	MSMD01	100	□38	AT203	AT203	–	–
			MSME01			AT203	AT203	–	–
			MSMD02	200	□60	–	–	AT204	AT204
			MSME02			–	–	AT204	AT204
	Hitachi Industrial Equipment Systems Co., Ltd	AD	ADMA-01L	100	□40	AT201	AT201	–	–
			ADMA-02L	200	□60	–	–	AT202	AT202
Stepper motor	ORIENTAL MOTOR Co., Ltd.	α step	ARM66		□60	AT205	AT206	–	–
			ARM69		□60	AT205	AT206	–	–
			ARM98		□85	–	–	AT207	AT210
			ARM911		□85	–	–	AT207	AT210
		RKS CRK	CRK56(1)		□60	AT208	AT209	–	–
			RKS59		□85	–	–	AT207	AT210

Note (1) Applicable to the outer diameter ϕ8 of motor output shaft.
Remark: For detailed motor specifications, please see respective motor manufacturer's catalog.

Table 3 Coupling models

Motor attachment	Coupling models	Manufacturer	Coupling inertia J_C $\times 10^{-5}$kg · m^2
AT201	UA-25C- 8× 8	Sakai Manufacturing Co., Ltd	0.29
AT202	UA-35C-12×14	Sakai Manufacturing Co., Ltd	1.34
AT203	UA-25C- 8× 8	Sakai Manufacturing Co., Ltd	0.29
AT204	UA-35C-11×12	Sakai Manufacturing Co., Ltd	1.34
AT205	MSTS-25C- 8×10	Nabeya Bi-tech Kaisha	0.71
AT206	MSTS-25C- 8×10	Nabeya Bi-tech Kaisha	0.71
AT207	MSTS-32C-12×14	Nabeya Bi-tech Kaisha	2.70
AT208	MSTS-20C- 8× 8	Nabeya Bi-tech Kaisha	0.25
AT209	MSTS-25C- 8× 8	Nabeya Bi-tech Kaisha	0.71
AT210	MSTS-32C-12×14	Nabeya Bi-tech Kaisha	2.70

Remark: For detailed coupling specifications, please see respective manufacturer's catalog.

1N=0.102kgf=0.2248lbs.
1mm=0.03937inch

Specifications

Table 4 Accuracy

unit: mm

Model and size	Stroke length	Positioning repeatability	Positioning accuracy	Parallelism in table motion B	Backlash
TSL 90 M	50	±0.002	0.015	0.020	0.003
	100		0.020	0.030	
	150				
	200		0.025		
	250				
	300		0.030	0.040	
TSL120 M	100	±0.002	0.020	0.030	0.003
	150				
	200		0.025		
	250				
	300		0.030	0.040	
	400		0.040	0.050	
	500		0.045		
	600		0.050	0.070	
TSL170 M	150	±0.002	0.020	0.030	0.003
	200		0.025		
	250				
	300		0.030	0.050	
	400		0.040		
	500		0.045		
TSL170SM TSL220 M	300	±0.002	0.030	0.040	0.003
	400		0.040	0.050	
	500		0.045		
	600		0.050	0.070	
	800				
	1 000		0.060		

Table 5 Maximum speed

Motor type	Model and size	Stroke length mm	Maximum speed mm/s	
			Lead 5mm	Lead 10mm
AC servo motor	TSL 90 M TSL120 M TSL170 M	–	250	500
	TSL170SM TSL220 M	600 or less	250	500
		800	249	498
		1 000	169	338
Stepper motor	TSL 90 M TSL120 M TSL170 M TSL170SM TSL220 M	–	150	300

Remark: To measure the practical maximum speed, it is required to consider operation patterns based on the motor to be used and load conditions.

Table 6 Maximum carrying mass

Model and size	Ball screw lead mm	Maximum carrying mass kg	
		Horizontal	Vertical
TSL 90M	5	46	7
	10	26	4.7
TSL120M	5	195	18
	10	97	18
TSL170M	5	195	18
	10	97	17
TSL170SM	5	218	21
	10	113	20
TSL220M	5	226	19
	10	111	18

Table 7 Specification of linear motion rolling guide

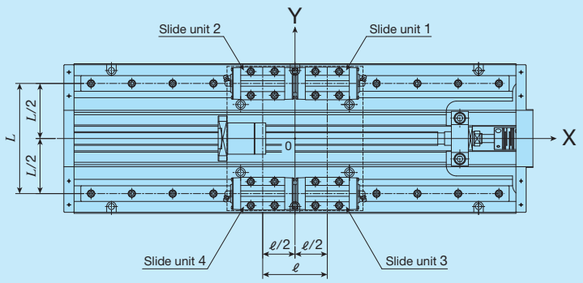

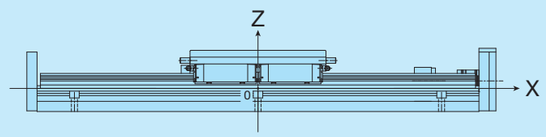

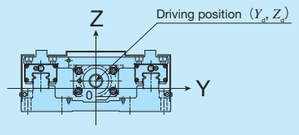

Model and size	Basic dynamic load rating(1) C N	Basic static load rating(1) C_0 N	Arrangement			
			L mm	ℓ mm	Y_d mm	Z_d mm
TSL 90 M	1 810	2 760	60	60	0	−7
TSL120 M	11 600	13 400	80	66	0	8
TSL170 M			106	66	0	11
TSL170SM			120	130	0	1
TSL220 M	25 200	28 800	162	95	0	11

Note (1) Represent the value per slide unit.

1N=0.102kgf=0.2248lbs.
1mm=0.03937inch

Specifications

Table 8.1 Specifications of ball screw 1

Model and size	Lead mm	Shaft dia. mm	Axial clearance mm	Basic dynamic load rating C N	Basic static load rating C_0 N
TSL 90 M	5	10	0.005	1 470	2 210
	10			1 030	1 370
TSL120 M TSL170 M	5	15	0.005	3 820	6 370
	10			3 820	6 370
TSL170SM TSL220 M	5	20	0.005	4 460	8 580
	10			4 460	8 580

Table 8.2 Specifications of ball screw 2

unit: mm

Model and size	Stroke length	Shaft dia.	Overall length
TSL 90 M	50	10	179
	100		229
	150		279
	200		329
	250		379
	300		429
TSL120 M	100	15	273
	150		323
	200		373
	250		423
	300		473
	400		573
	500		673
	600		773
TSL170 M	150	15	289
	200		339
	250		389
	300		439
	400		539
	500		639
TSL170SM	300	20	545
	400		645
	500		745
	600		845
	800		1 045
	1 000		1 245
TSL220 M	300	20	545
	400		645
	500		745
	600		845
	800		1 045
	1 000		1 245

Table 9 Table inertia and starting torque

Model and size	Stroke length mm	Table inertia J_T ×10⁻⁵kg · m²		Starting torque T_S N · m
		Lead 5mm	Lead 10mm	
TSL 90 M	50	0.20	0.33	0.05
	100	0.25	0.38	
	150	0.28	0.40	
	200	0.33	0.45	
	250	0.35	0.48	
	300	0.40	0.53	
TSL120 M	100	1.3	1.7	0.06
	150	1.5	1.9	
	200	1.7	2.1	
	250	1.9	2.3	
	300	2.1	2.5	
	400	2.4	2.9	
	500	2.8	3.3	
	600	3.2	3.7	
TSL170 M	150	1.4	1.8	0.06
	200	1.6	2.0	
	250	1.8	2.2	
	300	2.0	2.4	
	400	2.3	2.8	
	500	2.7	3.2	
TSL170S M	300	6.9	7.4	0.10
	400	8.1	8.6	
	500	9.3	9.8	
	600	11	11	
	800	13	14	
	1 000	15	16	
TSL220 M	300	7.5	8.5	0.10
	400	8.7	9.7	
	500	9.9	11	
	600	11	12	
	800	14	15	
	1 000	16	17	

Mounting

For the processing accuracy of the Precision Positioning Table mounting surface and the tightening torque of the fixing screws, see page Ⅲ-29.

1N=0.102kgf=0.2248lbs.
1mm=0.03937inch

Sensor Specification

Table 10 Sensor timing chart

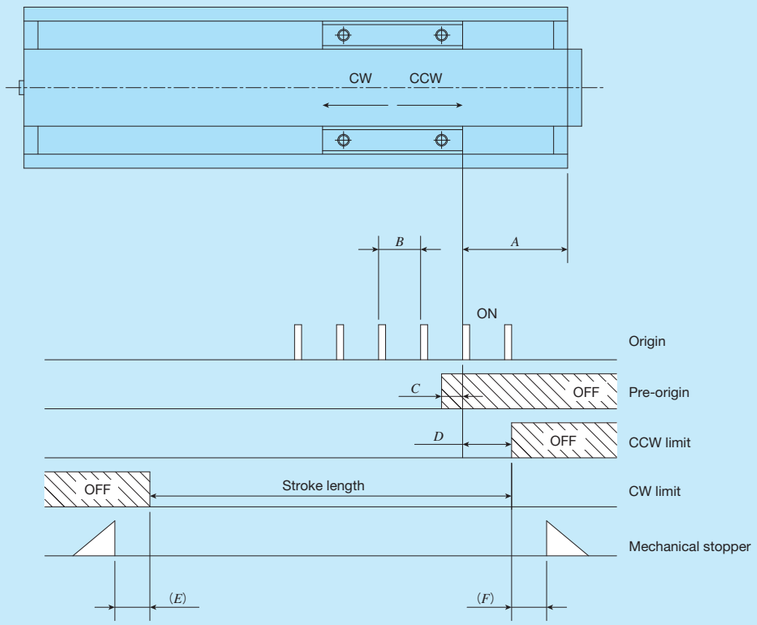

unit: mm

Model and size	Ball screw lead	*A*	*B*	*C*	*D*	*E*	*F*
TSL 90 M	5	50	5	3	20	5	5
	10		10	7			
TSL120 M	5	60	5	3	20	15	15
	10		10	7			
TSL170 M	5	45	5	3	20	3	3
	10		10	7			
TSL170SM	5	60	5	3	20	5	5
	10		10	7			
TSL220 M	5	60	5	3	20	5	5
	10		10	7			

Remark: For detailed specifications of respective sensors, please see the section of sensor specification in General Explanation.

Dimensions of Motor Attachment

TSL90M

AT201

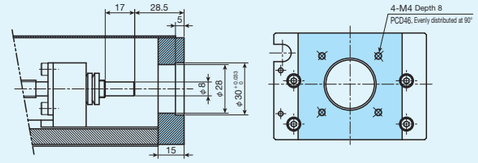

AT203

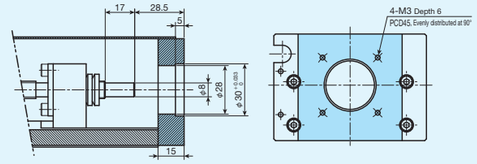

AT205
AT208

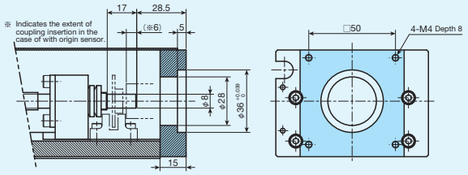

TSL120M

AT201

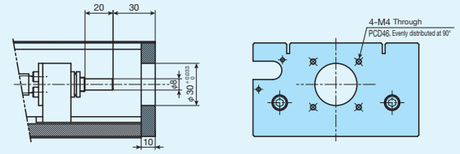

AT203

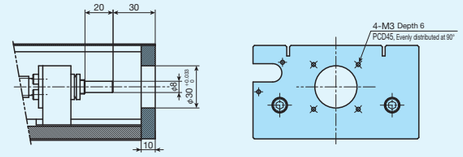

AT206
AT209

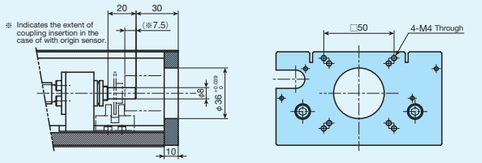

TSL170M

AT201

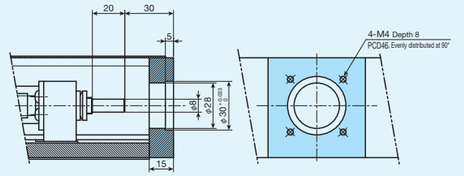

AT203

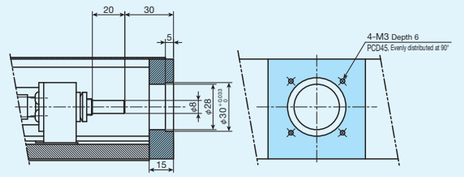

AT205
AT208

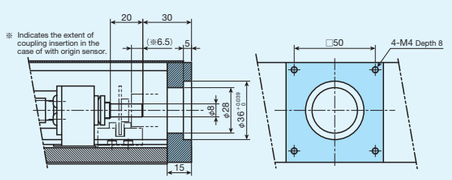

TSL170SM

AT202

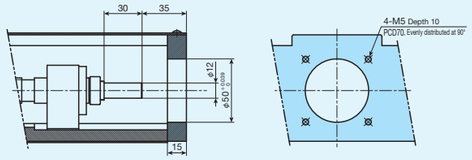

AT204

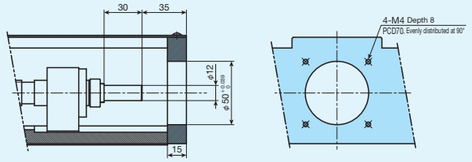

AT207

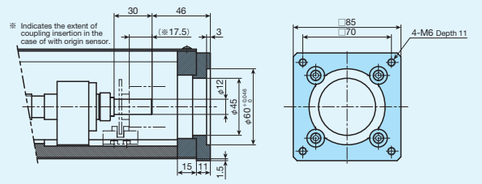

1N=0.102kgf=0.2248lbs.
1mm=0.03937inch

Dimensions of Motor Attachment

TSL220M

AT202

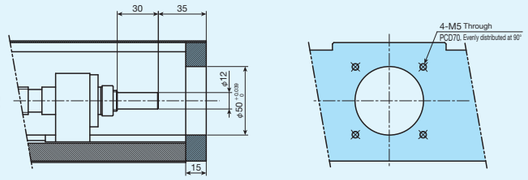

AT204

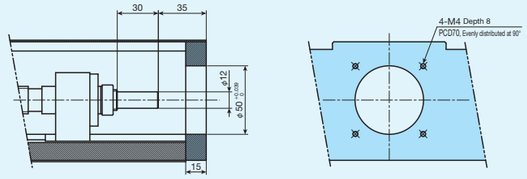

AT210

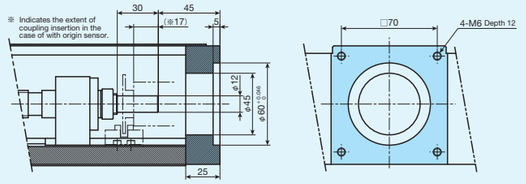

XY Bracket

Precision Positioning Table L can configure various combinations of two-axis using XY bracket (aluminum alloy) shown in Fig. 2. If you are interested, please specify the identification number of your desired model from the figure.

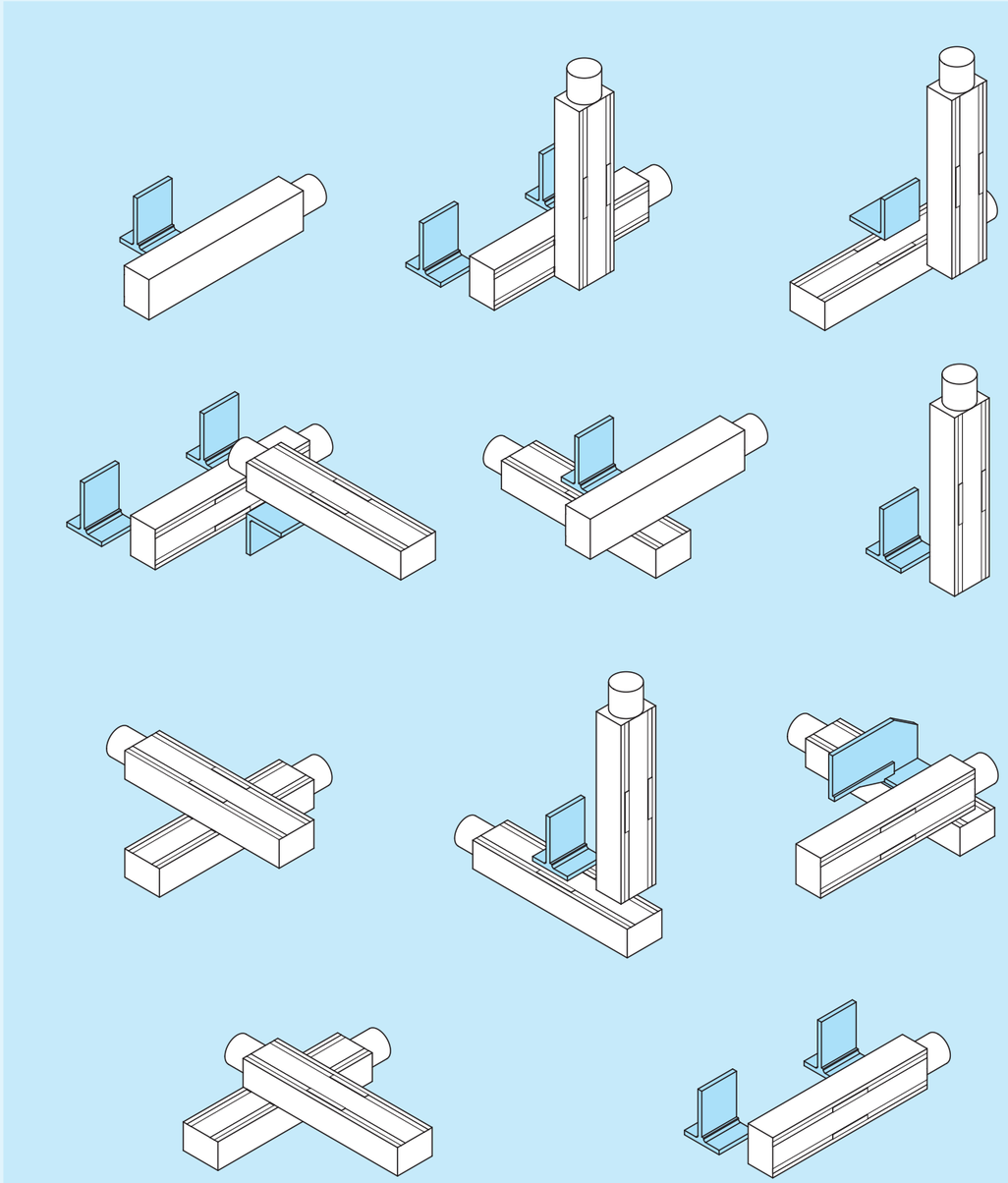

Fig. 1 Examples of two-axis combinations

1N=0.102kgf=0.2248lbs.
1mm=0.03937inch

XY Bracket

●TSL90-AGL

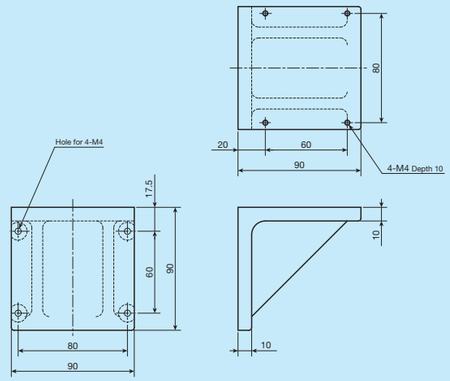

●TSL120-AGL

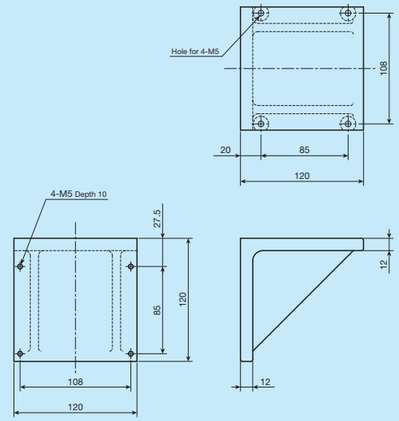

●TSL90-AGI

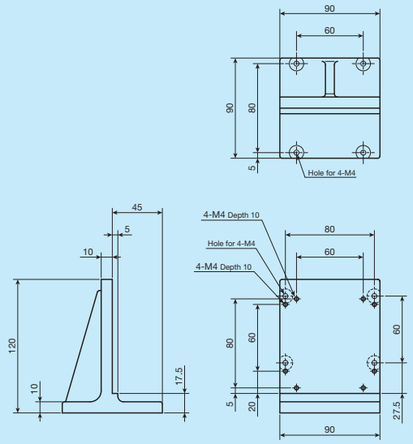

●TSL120-AGI

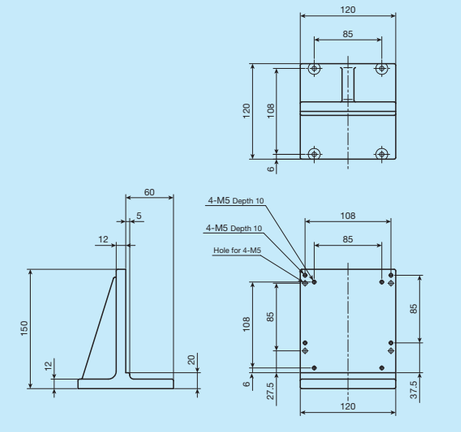

●TSL90-AGT

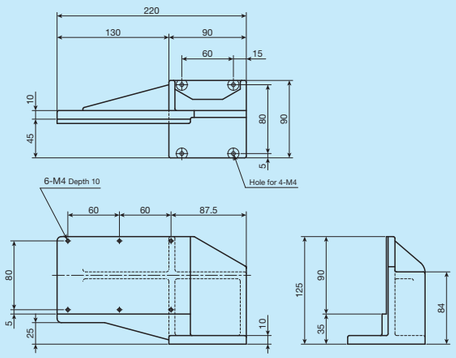

●TSL120-AGT

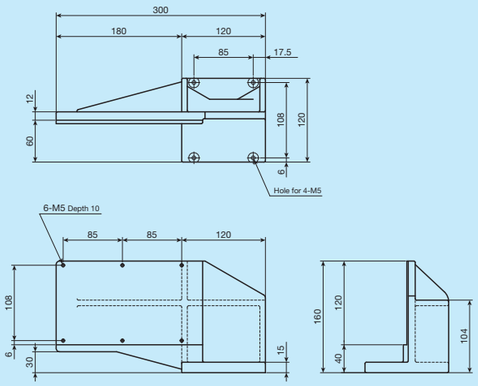

Fig. 2 XY bracket

IKO Precision Positioning Table L

TSL90M

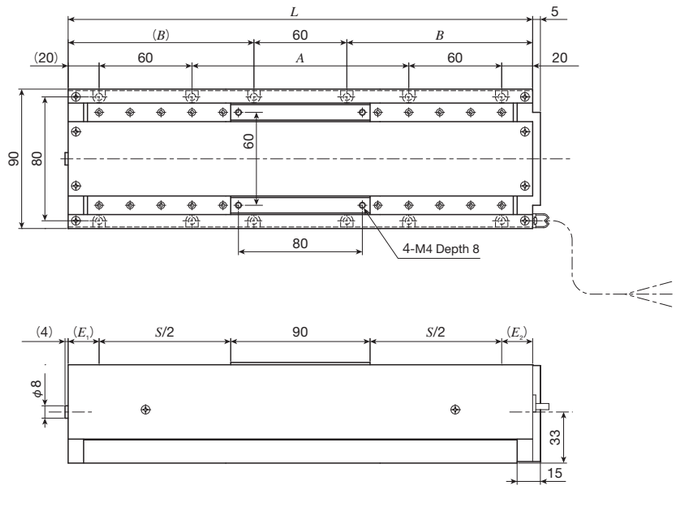

unit: mm

Identification number	Stroke length			Dimensions of table			Mass (Ref.)
				Overall length	Mounting holes of bed		
	S	E_1	E_2	L	A	B	kg
TSL90M- 50	50	30	30	200	40	70	2.8
TSL90M-100	100			250	90	95	3.2
TSL90M-150	150			300	140	120	3.5
TSL90M-200	200			350	190	145	3.9
TSL90M-250	250			400	240	170	4.2
TSL90M-300	300			450	290	195	4.6

1N=0.102kgf=0.2248lbs.
1mm=0.03937inch

TSL120M

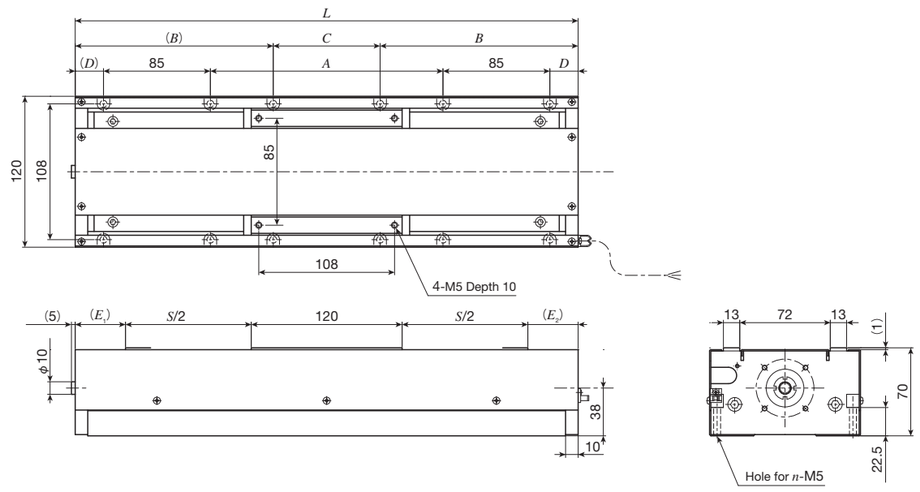

unit: mm

Identification number	Stroke length			Dimensions of table						Mass (Ref.) kg
					Mounting holes of bed					
	S	E_1	E_2	Overall length L	A	B	C	D	n	
TSL120M-100	100	40	40	300	85	107.5	85	22.5	8	6.1
TSL120M-150	150			350	135	132.5	85	22.5	12	6.6
TSL120M-200	200			400	185	157.5	85	22.5	12	7.1
TSL120M-250	250			450	235	182.5	85	22.5	12	7.6
TSL120M-300	300			500	255	207.5	85	37.5	12	8.1
TSL120M-400	400			600	355	207.5	185	37.5	12	9.1
TSL120M-500	500			700	455	207.5	285	37.5	12	10.1
TSL120M-600	600			800	555	207.5	385	37.5	12	11.1

TSL170M

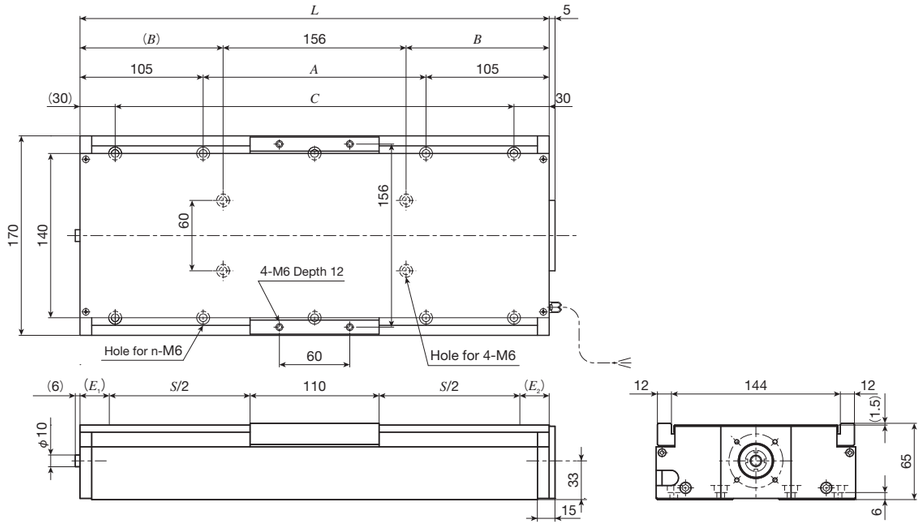

unit: mm

Identification number	Stroke length			Dimensions of table					Mass (Ref.) kg
					Mounting holes of bed				
	S	E_1	E_2	Overall length L	A	B	C (the number of holes×pitch)	n	
TSL170M-150	150	25	25	310	100	77	250	8	7.2
TSL170M-200	200			360	150	102	300	8	7.8
TSL170M-250	250			410	200	127	350 (2×175)	10	8.4
TSL170M-300	300			460	250	152	400 (2×200)	10	9.1
TSL170M-400	400			560	350	202	500 (2×250)	10	10.4
TSL170M-500	500			660	450	252	600 (2×300)	10	11.6

1N=0.102kgf=0.2248lbs.
1mm=0.03937inch

TSL170SM

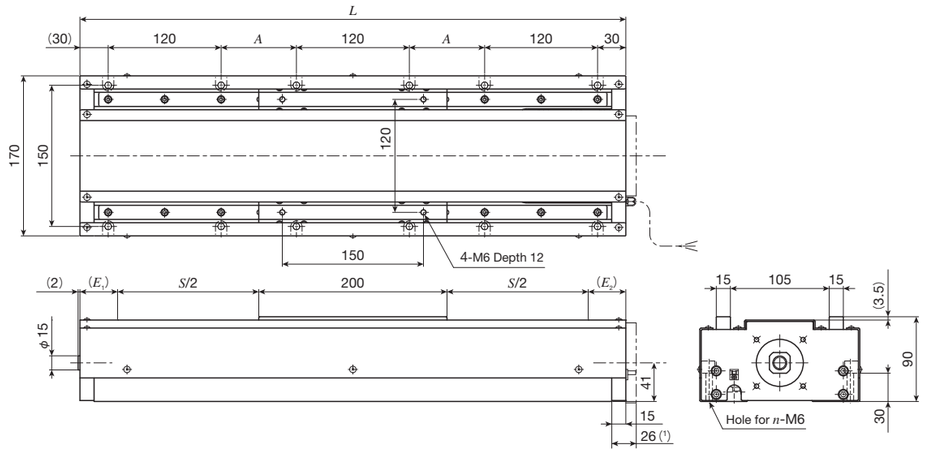

unit: mm

Identification number	Stroke length			Dimensions of table			Mass (Ref.) kg
	S	E_1	E_2	Overall length L	Mounting holes of bed A (the number of holes×pitch)	n	
TSL170SM- 300	300	40	40	580	80	12	14.8
TSL170SM- 400	400			680	130	12	16.6
TSL170SM- 500	500			780	180	12	18.5
TSL170SM- 600	600			880	230	12	20.3
TSL170SM- 800	800			1 080	330 (2×165)	16	24.0
TSL170SM-1000	1 000			1 280	430 (2×215)	16	27.7

Note (1) Applicable to AT207.

TSL220M

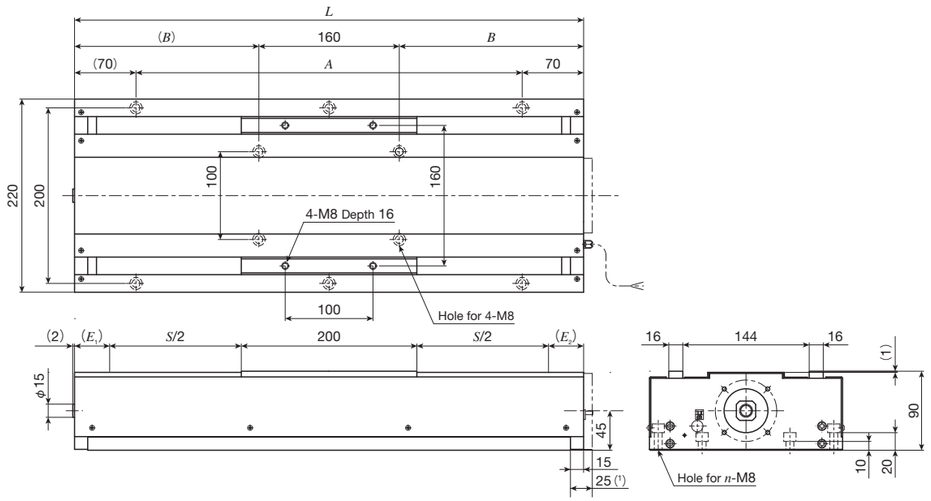

unit: mm

Identification number	Stroke length			Dimensions of table				Mass (Ref.) kg
	S	E_1	E_2	Overall length L	Mounting holes of bed A (the number of holes×pitch)	B	n	
TSL220M- 300	300	40	40	580	440 (2×220)	210	6	20.1
TSL220M- 400	400			680	540 (2×270)	260	6	22.5
TSL220M- 500	500			780	640 (2×320)	310	6	24.7
TSL220M- 600	600			880	740 (4×185)	360	10	27.0
TSL220M- 800	800			1 080	940 (4×235)	460	10	31.5
TSL220M-1000	1 000			1 280	1 140 (4×285)	560	10	36.2

Note (1) Applicable to AT210.

1N=0.102kgf=0.2248lbs.
1mm=0.03937inch

TSLH…M
CTLH…M

TSLH···M

Ball screw

Linear

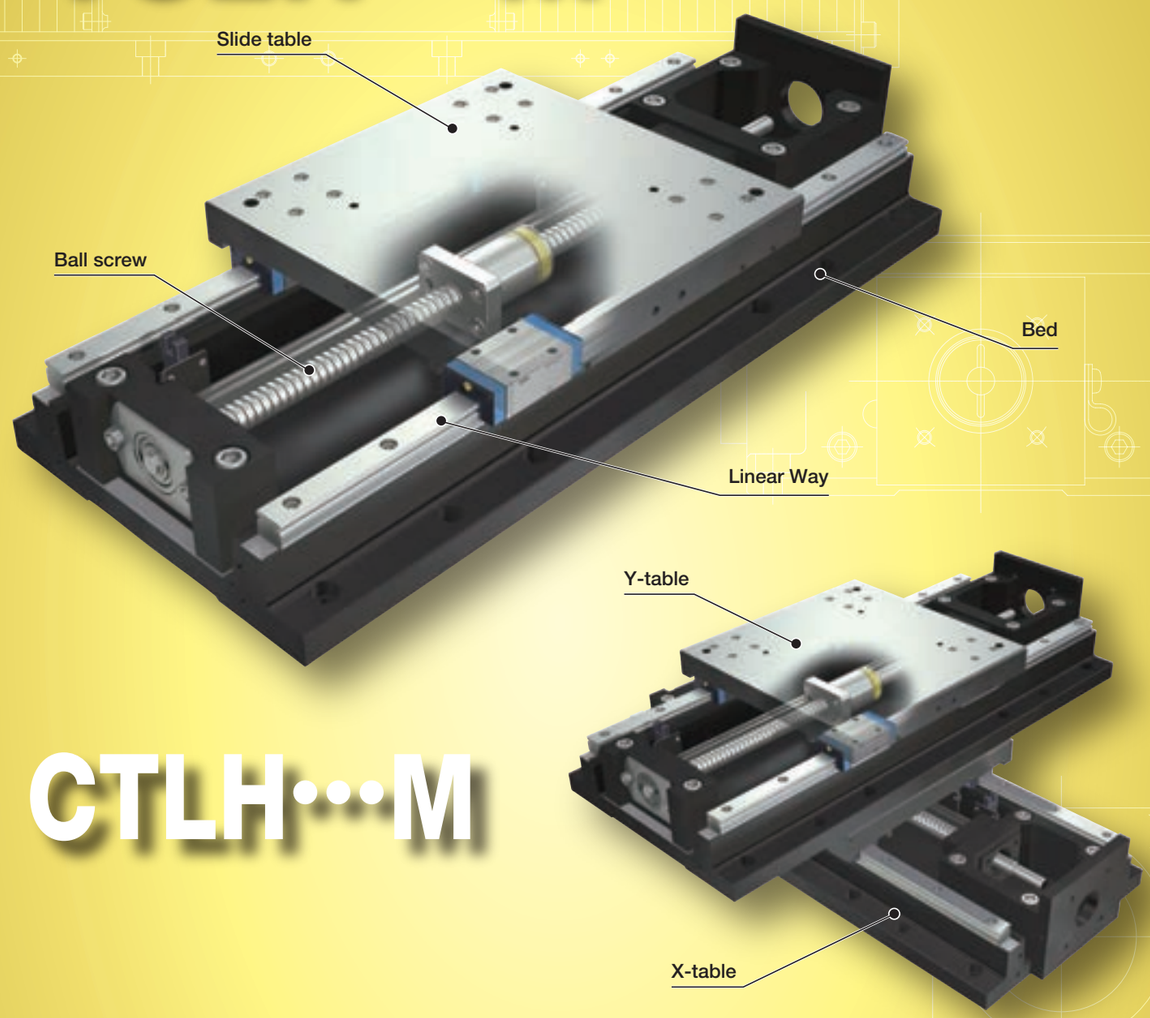

CTLH···M

Major product specifications

Driving method	Precision ball screw
Linear motion rolling guide	Linear Way（ball type）
Built-in lubrication part	Lubrication part "C-Lube" is built-in
Material of table and bed	Cast iron
Sensor	Provided as standard

Accuracy

unit: mm

Positioning repeatability	±0.002
Positioning accuracy	0.010～0.035
Lost motion	–
Parallelism in table motion A	0.010～0.035
Parallelism in table motion B	–
Attitude accuracy	–
Straightness	0.005～0.025
Backlash	0.001

Points

● High precision, high rigidity positioning table

1 High precision, high rigidity positioning table configured with high rigidity and vibration damping performance cast iron slide tables and beds.

● High running accuracy and positioning accuracy

2 High running accuracy and high accuracy positioning are realized by incorporating 2 sets of Linear Way in parallel on cast iron slide tables and beds finished by accurate ground and combining with precision ball screws.

● High rigidity and large carrying mass

3 The structure with large carrying mass, and resistant to moment and complex load since 2 sets of Linear Way are optimally positioned on the high rigidity bed.

Variation

Shape	Model and size	Table width (mm)	Stroke length (mm) 100	150	200	250	300	400	500	600	800	1000
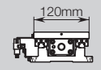	TSLH120M	120	☆	☆	☆	☆	☆	–	–	–	–	–
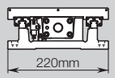	TSLH220M	220	–	☆	☆	☆	☆	☆	(☆)	(☆)	–	–
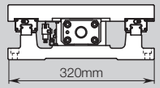	TSLH320M	320	–	–	–	–	☆	☆	☆	(☆)	(☆)	(☆)
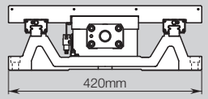	TSLH420M	420	–	–	–	–	–	–	☆	☆	☆	(☆)

1N=0.102kgf=0.2248lbs.
1mm=0.03937inch

Identification Number

Example of an Identification Number (Single-axis specification)

1	2	1	3		4	5	6	7
TSLH	120	M	-	300	/	AT301	10	J	R

1 Model Page Ⅱ-126

2 Size Page Ⅱ-126

3 Stroke length Page Ⅱ-126

4 Designation of motor attachment Page Ⅱ-126

5 Ball screw lead Page Ⅱ-126

6 Designation of bellow Page Ⅱ-126

7 Surface treatment Page Ⅱ-126

Identification Number and Specification

1 Model

TSLH···M: Precision Positioning Table LH (single-axis specification)

2 Size

Size indicates table width.
Select a size from the list of Table 1.

3 Stroke length

Select a stroke length from the list of Table 1.

As for a table with bellows, available stroke length is somewhat shorter, so please see the dimension table.

Table 1 Sizes, table width dimensions, and stroke lengths

unit: mm

Model and size	Table width	Stroke length
TSLH120M	120	100, 150, 200, 250, 300
TSLH220M	220	150, 200, 250, 300, 400 (500, 600)
TSLH320M	320	300, 400, 500 (600, 800, 1 000)
TSLH420M	420	500, 600, 800 (1 000)

Remark: If the stroke length shown in ( ) is needed, please contact IKO.

4 Designation of motor attachment

As for a motor attachment, select it from the list of Table 3.

- Motor should be prepared by customer.
- Please specify motor attachment applicable to motor for use.
- A coupling shown in Table 4 is mounted on the main body before shipment. However, the final position adjustment should be made by customer since it is only temporarily fixed.
- When specifying an AC servomotor attachment, an origin sensor is not provided.

5 Ball screw lead

5: Lead 5mm
10: Lead 10mm

6 Designation of bellow

No symbol: Without bellows
J : With bellows

As for a table with bellows, available stroke length is somewhat shorter, so please see the dimension table.

7 Surface treatment

No symbol: Black chrome surface treatment
R : Black chrome surface treatment 1
L : Black chrome surface treatment 2

Black chrome surface treatment: This treatment is performed on main parts excluding Linear Way, ball screw, and ball bearing.
Black chrome surface treatment 1: In addition to the above black chrome surface treatment, this treatment is performed even on the surface of Linear Way.
Black chrome surface treatment 2: In addition to the above black chrome surface treatment 1, this treatment is performed even on the surface of ball screw.
The black chrome surface treatment improves the corrosion resistance by forming black permeable film on the surface.
For the upper and lower surfaces of the main body and the reference surfaces of respective parts, surface treatment is excluded.

1N=0.102kgf=0.2248lbs.
1mm=0.03937inch

Identification Number

Example of an Identification Number (Two-axis specification)

1	2	1	3	4		5	6	7	8	9
CTLH	120	M	-	30	20	/	AT301	10	J	R	C

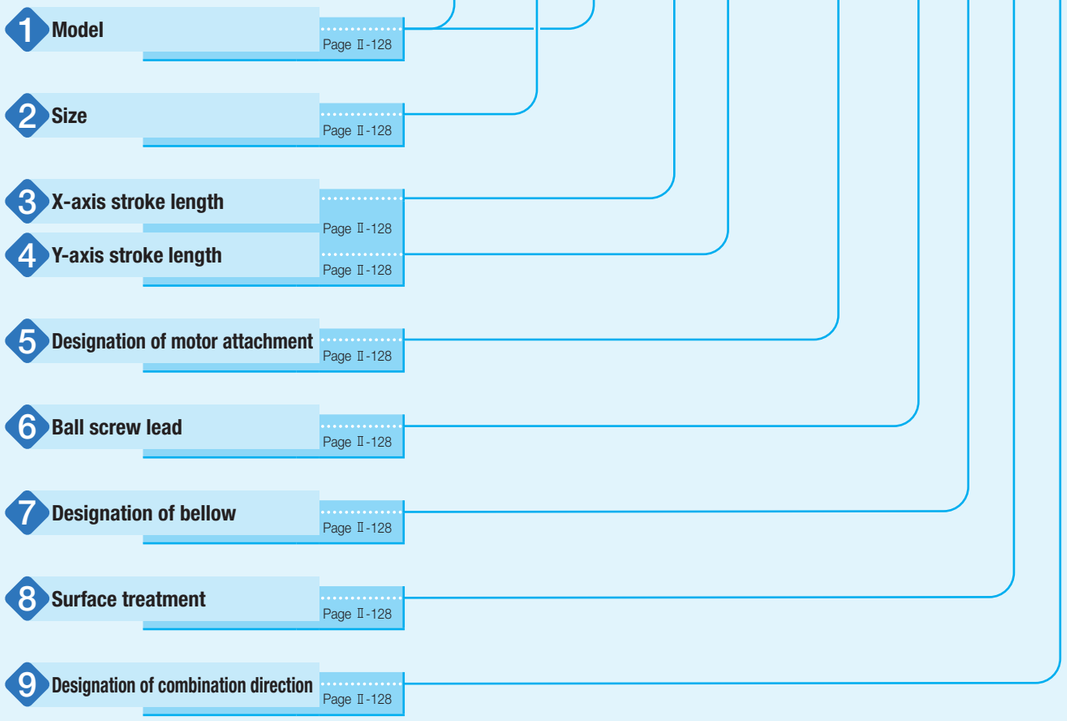

Identification Number and Specification

1 Model

CTLH···M: Precision Positioning Table LH (two-axis specification)

2 Size

Size indicates table width.
Select a size from the list of Table 2.

Tables of different sizes can also be combined.

3 X-axis stroke length

Select a stroke length from the list of Table 2.

4 Y-axis stroke length

Stroke lengths of respective axes are displayed in cm. Please note that allowable lengths for X- and Y-axes vary. As for a table with bellows, available stroke length is somewhat shorter, so please see the dimension table.

Table 2 Sizes, table width dimensions, and stroke lengths unit: mm

Model and size	Table width	Stroke length	
		X-axis	Y-axis
CTLH120M	120	100	100
		200	100
		200	200
		300	200
		300	300
CTLH220M	220	200	200
		300	200
		300	300
		400	300
		400	400
CTLH320M	320	300	300
		400	300
		400	400
		500	400
		500	500

5 Designation of motor attachment

As for a motor attachment, select it from the list of Table 3.

- Motor should be prepared by customer.
- Please specify motor attachment applicable to motor for use.
- A coupling shown in Table 4 is mounted on the main body before shipment. However, the final position adjustment should be made by customer since it is only temporarily fixed.
- When specifying an AC servomotor attachment, an origin sensor is not provided.

6 Ball screw lead

5: Lead 5mm
10: Lead 10mm

7 Designation of bellow

No symbol: Without bellows
J : With bellows

As for a table with bellows, available stroke length is somewhat shorter, so please see the dimension table.

8 Surface treatment

No symbol: Black chrome surface treatment
R : Black chrome surface treatment 1
L : Black chrome surface treatment 2

Black chrome surface treatment: This treatment is performed on main parts excluding Linear Way, ball screw, and ball bearing.
Black chrome surface treatment 1: In addition to the above black chrome surface treatment, this treatment is performed even on the surface of Linear Way.
Black chrome surface treatment 2: In addition to the above black chrome surface treatment 1, this treatment is performed even on the surface of ball screw.
The black chrome surface treatment improves the corrosion resistance by forming black permeable film on the surface.
For the upper and lower surfaces of the main body and the reference surfaces of respective parts, surface treatment is excluded.

9 Designation of combination direction

No symbol: Standard configuration
C : Reverse configuration

Standard configuration: A direction under the condition where X-axis motor side is placed at the front and Y-axis motor side is placed on the right side respectively.
Reverse configuration: A direction under the condition where X-axis motor side is placed at the front and Y-axis motor side is placed on the left side respectively.

1N=0.102kgf=0.2248lbs.
1mm=0.03937inch

Table 3 Application of motor attachment

Models of motor to be used						Motor attachment			
Type	Manufacturer	Series	Model	Rated output W	Flange size mm	TSLH120M CTLH120M	TSLH220M CTLH220M	TSLH320M CTLH320M	TSLH420M
AC servo motor	YASKAWA ELECTRIC CORPORATION	Σ-V	SGMJV-01A	100	□40	AT301	–	–	–
			SGMAV-01A			AT301	–	–	–
			SGMJV-02A	200	□60	AT302	AT303	–	–
			SGMAV-02A			AT302	AT303	–	–
			SGMJV-04A	400		–	AT303	AT304	–
			SGMAV-04A			–	AT303	AT304	–
			SGMJV-08A	750	□80	–	–	AT305	AT306
			SGMAV-08A			–	–	AT305	AT306
	Mitsubishi Electric Corporation	J4	HG-MR13	100	□40	AT301	–	–	–
			HG-KR13			AT301	–	–	–
			HG-MR23	200	□60	AT302	AT303	–	–
			HG-KR23			AT302	AT303	–	–
			HG-MR43	400		–	AT303	AT304	–
			HG-KR43			–	AT303	AT304	–
			HG-MR73	750	□80	–	–	AT305	AT306
			HG-KR73			–	–	AT305	AT306
	Panasonic Corporation	MINAS A5	MSMD01	100	□38	AT307	–	–	–
			MSME01			AT307	–	–	–
			MSMD02	200	□60	AT308	AT309	AT311	–
			MSME02			AT308	AT309	AT311	–
			MSMD04	400		–	AT310	AT312	–
			MSME04			–	AT310	AT312	–
			MSME08	750	□80	–	–	AT313	AT314
			MSME08			–	–	AT313	AT314
	Hitachi Industrial Equipment Systems Co., Ltd	AD	ADMA-01L	100	□40	AT301	–	–	–
			ADMA-02L	200	□60	AT302	AT303	–	–
			ADMA-04L	400		–	AT303	AT304	–
			ADMA-08L	750	□75	–	–	AT305	AT306
Stepper motor	ORIENTAL MOTOR Co., Ltd.	α step	ARM66		□60	AT315	–	–	–
			ARM69			AT315	–	–	–
			ARM98		□85	–	AT317	AT318	–
			ARM911			–	AT317	AT318	–
		RKS CRK	CRK56(1)		□60	AT316	–	–	–
			RKS59		□85	–	AT317	AT318	–

Note (1) Applicable to the outer diameter ϕ8 of motor output shaft.
Remark: For detailed motor specifications, please see respective motor manufacturer's catalog.

Table 4 Coupling models

Motor attachment	Coupling models	Manufacturer	Coupling inertia J_c $\times 10^{-5}$kg · m^2
AT301	UA-25C- 8× 8	Sakai Manufacturing Co., Ltd	0.290
AT302	UA-30C- 8×14	Sakai Manufacturing Co., Ltd	0.603
AT303	UA-35C-12×14	Sakai Manufacturing Co., Ltd	1.34
AT304	UA-35C-14×15	Sakai Manufacturing Co., Ltd	1.34
AT305	UA-40C-15×19	Sakai Manufacturing Co., Ltd	2.61
AT306	UA-40C-15×19	Sakai Manufacturing Co., Ltd	2.61
AT307	UA-25C- 8× 8	Sakai Manufacturing Co., Ltd	0.290
AT308	UA-30C- 8×11	Sakai Manufacturing Co., Ltd	0.603
AT309	UA-35C-11×12	Sakai Manufacturing Co., Ltd	1.34
AT310	UA-35C-12×14	Sakai Manufacturing Co., Ltd	1.34
AT311	UA-35C-11×15	Sakai Manufacturing Co., Ltd	1.34
AT312	UA-35C-14×15	Sakai Manufacturing Co., Ltd	1.34
AT313	UA-40C-15×19	Sakai Manufacturing Co., Ltd	2.61
AT314	UA-40C-15×19	Sakai Manufacturing Co., Ltd	2.61
AT315	MSTS-25C- 8×10	Nabeya Bi-tech Kaisha	0.71
AT316	MSTS-25C- 8× 8	Nabeya Bi-tech Kaisha	0.71
AT317	MSTS-32C-12×14	Nabeya Bi-tech Kaisha	2.7
AT318	MSTS-40C-14×15	Nabeya Bi-tech Kaisha	9.0

Remark: For detailed coupling specifications, please see respective manufacturer's catalog.

Specifications

Table 5 Accuracy

unit: mm

Model and size		Stroke length X-axis	Stroke length Y-axis	Positioning repeatability	Positioning accuracy	Parallelism in table motion A	Straightness	Squareness of XY motion	Backlash
Single-axis specification	TSLH120M	100		±0.002	0.010	0.010	0.005	–	0.001
		150							
		200			0.015	0.015			
		250					0.010		
		300			0.020	0.020			
	TSLH220M	150		±0.002	0.010	0.010	0.005	–	0.001
		200			0.015	0.015			
		250							
		300							
		400			0.020	0.020	0.010		
	TSLH320M	300		±0.002	0.015	0.015	0.005	–	0.001
		400			0.020				
		500							
	TSLH420M	500		±0.002	0.025	0.025	0.015	–	0.001
		600			0.030	0.030			
		800			0.035	0.035	0.020		
Two-axis specification	CTLH120M	100	100	±0.002	0.015	0.015	0.005	0.005	0.001
		200	100		0.020	0.020	0.010	0.010	
		200	200			0.025			
		300	200		0.030	0.030	0.025		
		300	300						
	CTLH220M	200	200	±0.002	0.020	0.025	0.010	0.010	0.001
		300	200						
		300	300						
		400	300		0.030	0.035	0.020	0.015	
		400	400						
	CTLH320M	300	300	±0.002	0.020	0.020	0.005	0.010	0.001
		400	300		0.025	0.025	0.010	0.015	
		400	400						
		500	400		0.030				
		500	500						

Table 6 Maximum speed

Motor type	Model and size Single-axis specification	Model and size Two-axis specification	Maximum speed mm/s Lead 5mm	Maximum speed mm/s Lead 10mm
AC servo motor	TSLH120M TSLH220M	CTLH120M CTLH220M	250	500
	TSLH320M TSLH420M	CTLH320M	224	448
Stepper motor	TSLH120M TSLH220M TSLH320M	CTLH120M CTLH220M CTLH320M	150	300

Remark: To measure the practical maximum speed, it is required to consider operation patterns based on the motor to be used and load conditions.

1N=0.102kgf=0.2248lbs.
1mm=0.03937inch

Table 7 Maximum carrying mass

Model and size	Ball screw lead mm	Maximum carrying mass kg	
		Horizontal	Vertical
TSLH120M	5	135	28
	10	124	27
TSLH220M	5	218	30
	10	187	29
TSLH320M	5	536	27
	10	254	25
TSLH420M	5	519	10
	10	237	8

Table 8 Specifications of linear motion rolling guide

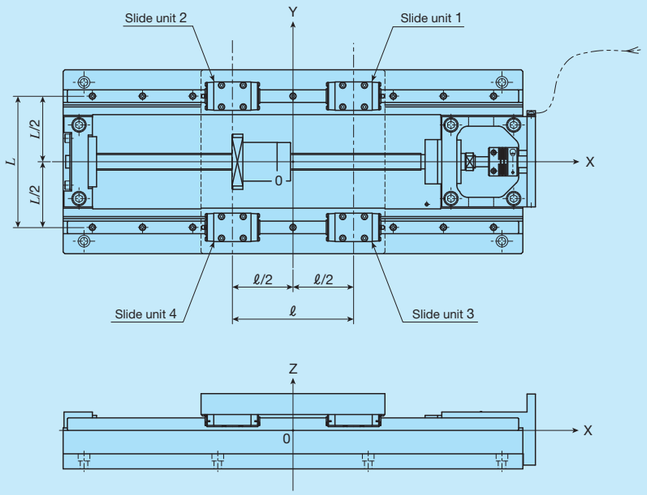

Model and size	Basic dynamic load rating(1) C N	Basic static load rating(1) C_0 N	Arrangement			
			L mm	ℓ mm	Y_d mm	Z_d mm
TSLH120M	6 260	8 330	88	82	0	2
TSLH220M	11 600	13 400	157	145	0	1
TSLH320M	25 200	28 800	240	210	0	6
TSLH420M	30 800	38 300	300	290	0	0

Note (1) Represent the value per slide unit.

Table 9.1 Specifications of ball screw 1

Model and size	Lead mm	Shaft dia. mm	Axial clearance mm	Basic dynamic load rating C N	Basic static load rating C_0 N
TSLH120M	5	15	0	7 070	12 800
	10			7 070	12 800
TSLH220M	5	20	0	8 230	17 510
	10			10 900	21 700
TSLH320M TSLH420M	5	25	0	16 700	43 500
	10			15 800	32 700

Table 9.2 Specifications of ball screw 2

unit: mm

Model and size	Stroke length	Shaft dia.	Overall length
TSLH120M	100	15	256
	150		306
	200		356
	250		406
	300		456
TSLH220M	150	20	370
	200		420
	250		470
	300		520
	400		620
TSLH320M	300	25	616
	400		716
	500		816
TSLH420M	500	25	916
	600		1 016
	800		1 216

1N=0.102kgf=0.2248lbs.
1mm=0.03937inch

Specifications

Table 10 Table inertia and starting torque

	Model and size	Stroke length mm		Table inertia J_T ×10⁻⁵kg · m²		Starting torque T_S N · m	
		X-axis	Y-axis	Lead 5mm	Lead 10mm	Lead 5mm	Lead 10mm
Single-axis specification	TSLH120M	100		1.2	1.7	0.07	
		150		1.4	1.9		
		200		1.5	2.1		
		250		1.7	2.3		
		300		1.9	2.5		
	TSLH220M	150		5.1	6.9	0.12	
		200		5.7	7.5		
		250		6.3	8.1		
		300		7.0	8.7		
		400		8.2	10		
	TSLH320M	300		20	26	0.20	
		400		23	29		
		500		26	32		
	TSLH420M	500		30	39	0.22	
		600		33	42		
		800		39	48		
Two-axis specification	CTLH120M	100	100	1.8	4.2	0.08	
		200	100	2.2	4.5		
		200	200	2.3	5.1		
		300	200	2.7	5.5		
		300	300	2.8	6.0		
	CTLH220M	200	200	7.8	16	0.12	
		300	200	9.1	17		
		300	300	9.3	18		
		400	300	11	19		
		400	400	11	21		
	CTLH320M	300	300	27	51	0.22	0.25
		400	300	30	54		
		400	400	30	57		
		500	400	33	60		
		500	500	34	62		

Remark: As for tables of two-axis specification, the figures represent values in X-axis. For values in Y-axis, see the figures for single-axis specification.

Mounting

For the processing accuracy of the Precision Positioning Table mounting surface and the tightening torque of the fixing screws, see page Ⅲ-29.

Sensor Specification

Table 11.1 Sensor timing chart (without bellows)

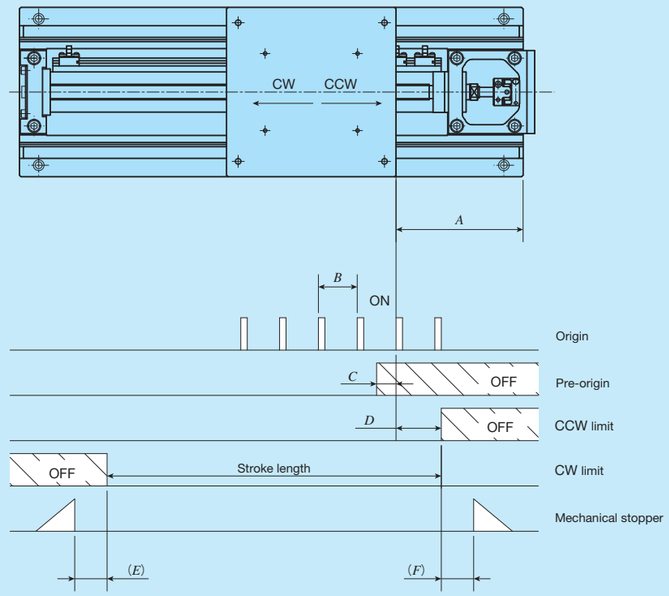

unit: mm

Model and size	Ball screw lead	A	B	C	D	E	F
TSLH120M	5	50	5	3	30	5.5	4.5
	10		10	7			
TSLH220M	5	45	5	3	30	14	10
	10		10	7		12	10
TSLH320M	5	45	5	3	30	20	15
	10		10	7		20	15
TSLH420M	5	45	5	3	30	18	15
	10		10	7			

Remarks 1. For detailed specifications of respective sensors, please see the section of sensor specification in General Explanation.
2. The values of respective axes in tables of two-axis specification are the same as those of tables of single-axis specification.

1N=0.102kgf=0.2248lbs.
1mm=0.03937inch

Table 11.2 Sensor timing chart (with bellows)

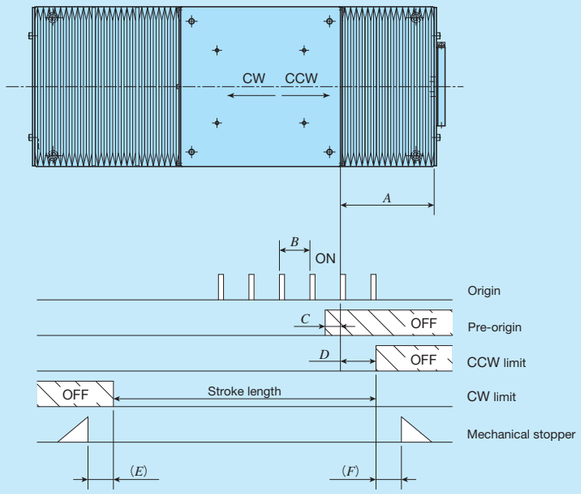

unit: mm

Model and size	Ball screw lead	A	B	C	D	E	F
TSLH120M-100/J	5	57.5	5	3	30	5	5
	10		10	7			
TSLH120M-150/J	5	62.5	5	3	30	5	5
	10		10	7			
TSLH120M-200/J	5	67.5	5	3	30	5	5
	10		10	7			
TSLH120M-250/J	5	72.5	5	3	30	5	5
	10		10	7			
TSLH120M-300/J	5	80	5	3	30	5	5
	10		10	7			
TSLH220M-150/J	5	65	5	3	30	7	5
	10		10	7		5	
TSLH220M-200/J	5	70	5	3	30	7	5
	10		10	7		5	
TSLH220M-250/J	5	80	5	3	30	7	5
	10		10	7		5	
TSLH220M-300/J	5	85	5	3	30	7	5
	10		10	7		5	
TSLH220M-400/J	5	95	5	3	30	7	5
	10		10	7		5	
TSLH320M-300/J	5	80	5	3	30	5	5
	10		10	7			
TSLH320M-400/J	5	90	5	3	30	5	5
	10		10	7			
TSLH320M-500/J	5	95	5	3	30	5	5
	10		10	7			
TSLH420M-500/J	5	90	5	3	30	5	5
	10		10	7			
TSLH420M-600/J	5	95	5	3	30	5	5
	10		10	7			
TSLH420M-800/J	5	115	5	3	30	5	5
	10		10	7			

Remarks 1. For detailed specifications of respective sensors, please see the section of sensor specification in General Explanation.
2. The values of respective axes in tables of two-axis specification are the same as those of tables of single-axis specification.

Dimensions of Motor Attachment

TSLH120M, CTLH120M

AT301

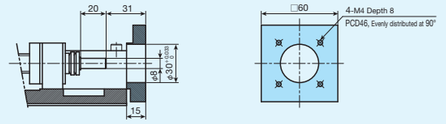

AT302

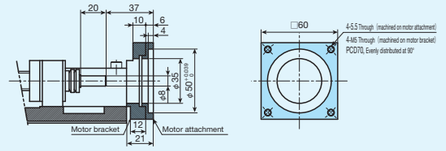

AT307

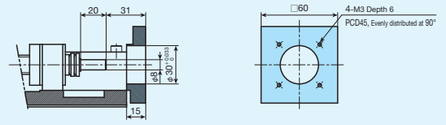

AT308

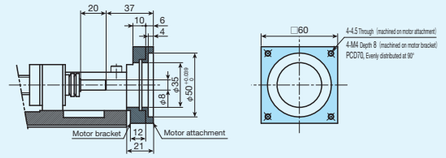

AT315
AT316

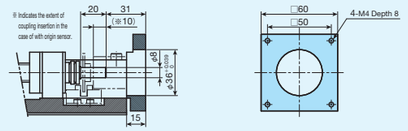

TSLH220M, CTLH220M

AT303

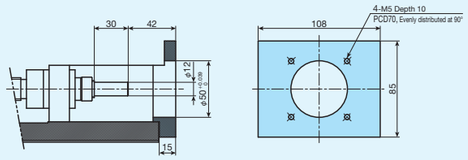

AT309
AT310

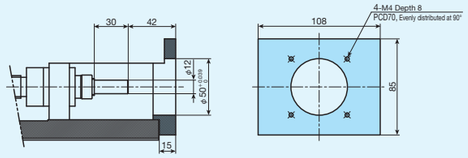

AT317

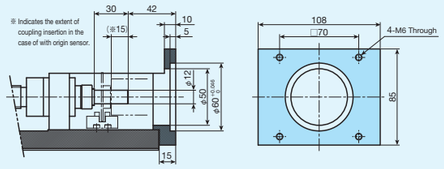

TSLH320M, CTLH320M

AT304

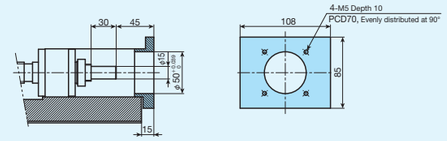

AT305

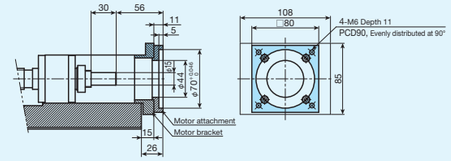

AT311
AT312

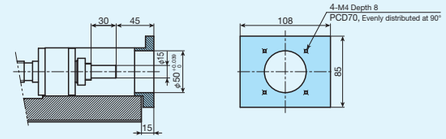

AT313

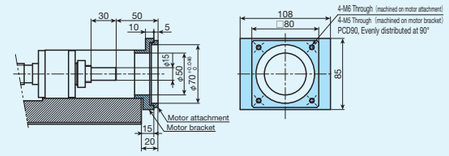

AT318

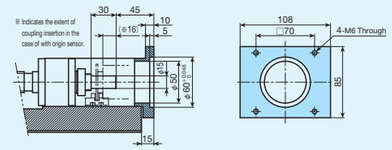

TSLH420M

AT306

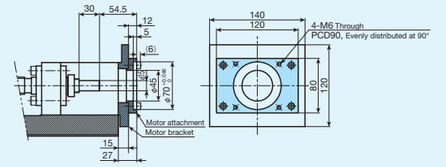

AT314

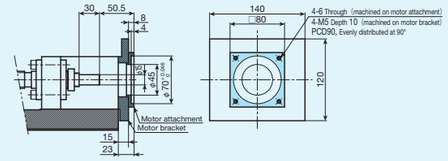

1N=0.102kgf=0.2248lbs.
1mm=0.03937inch

TSLH120M

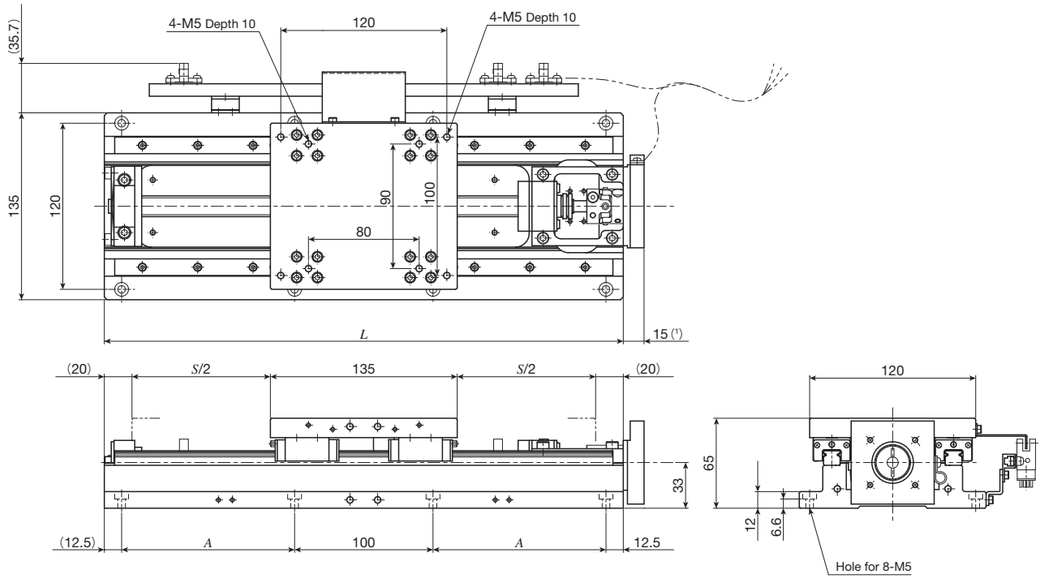

unit: mm

Identification number	Stroke length S	Overall length L	Mounting holes of bed A	Mass (Ref.) kg
TSLH120M-100	100	275	75	10
TSLH120M-150	150	325	100	11
TSLH120M-200	200	375	125	12
TSLH120M-250	250	425	150	13
TSLH120M-300	300	475	175	14

Note (1) When selecting AT302 or AT308, 21mm is applied.

TSLH220M

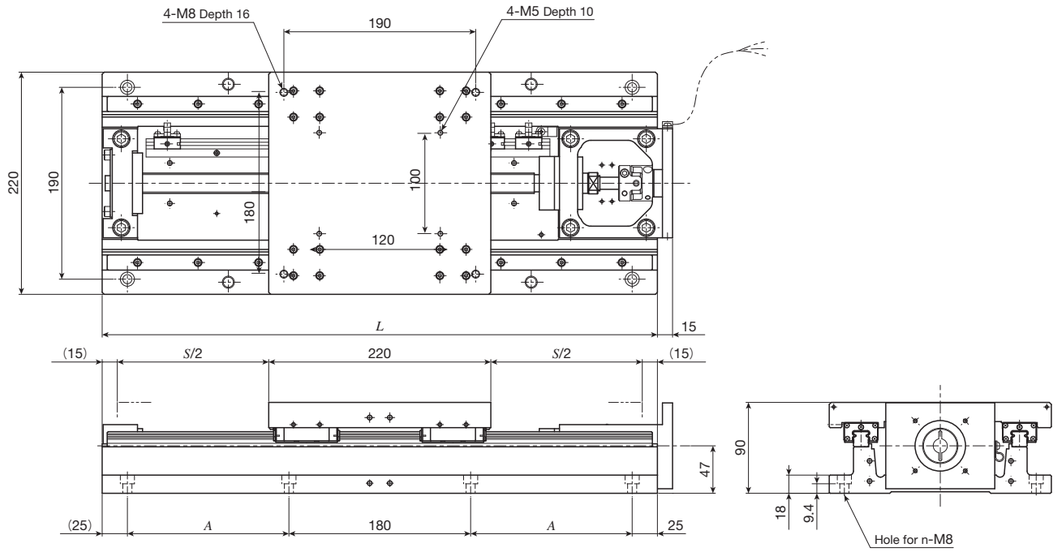

unit: mm

Identification number	Stroke length S	Overall length L	Mounting holes of bed A (the number of holes×pitch)	Mounting holes of bed n	Mass (Ref.) kg
TSLH220M-150	150	400	85	8	32
TSLH220M-200	200	450	110	8	34
TSLH220M-250	250	500	135	8	36
TSLH220M-300	300	550	160	8	38
TSLH220M-400	400	650	210 (2×105)	12	42
(TSLH220M-500)	500	750	260 (2×130)	12	47
(TSLH220M-600)	600	850	310 (2×155)	12	51

Remark: If you are interested in a product of identification number shown in ( ), please contact IKO.

1N=0.102kgf=0.2248lbs.
1mm=0.03937inch

IKO Precision Positioning Table LH

TSLH320M

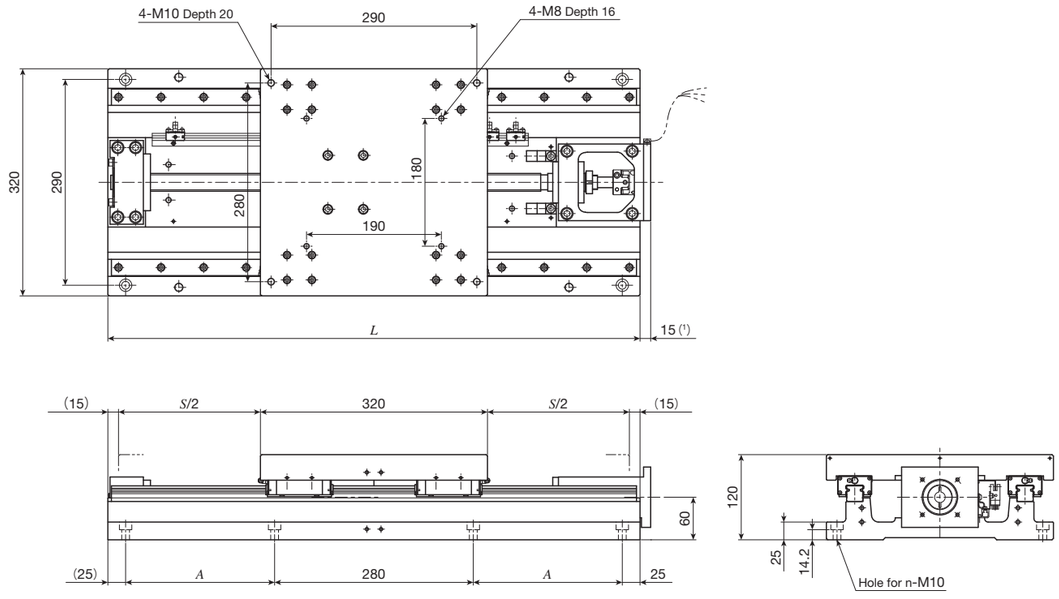

unit: mm

Identification number	Stroke length S	Overall length L	Mounting holes of bed		Mass (Ref.) kg
			A (the number of holes×pitch)	n	
TSLH320M- 300	300	650	160	8	100
TSLH320M- 400	400	750	210	8	109
TSLH320M- 500	500	850	260	8	118
(TSLH320M- 600)	600	950	310	8	127
(TSLH320M- 800)	800	1 150	410 (2×205)	12	146
(TSLH320M-1000)	1 000	1 350	510 (2×255)	12	164

Note (1) When selecting AT305, 26mm is applied. When selecting AT313, 20mm is applied.
Remark: If you are interested in a product of identification number shown in ( ), please contact IKO.

TSLH420M

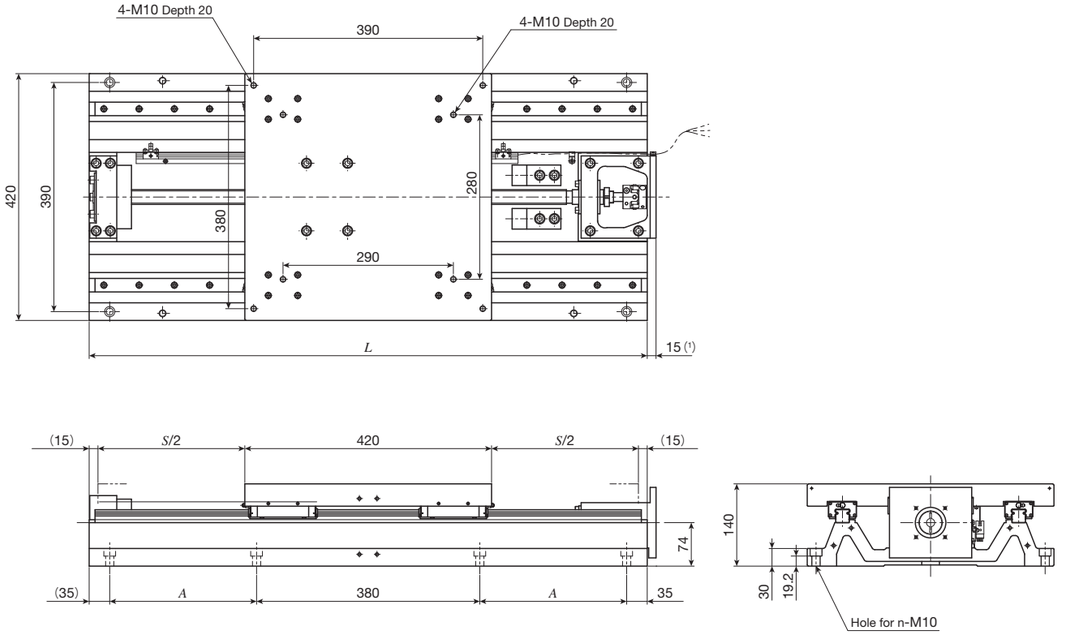

unit: mm

Identification number	Stroke length S	Overall length L	Mounting holes of bed		Mass (Ref.) kg
			A (the number of holes×pitch)	n	
TSLH420M- 500	500	950	250	8	176
TSLH420M- 600	600	1 050	300	8	188
TSLH420M- 800	800	1 250	400 (2×200)	12	212
(TSLH420M-1000)	1 000	1 450	500 (2×250)	12	237

Note (1) They represent the dimensions of motor bracket only. When selecting AT306, 27mm is applied. When selecting AT314, 23mm is applied.
Remark: If you are interested in a product of identification number shown in ( ), please contact IKO.

1N=0.102kgf=0.2248lbs.
1mm=0.03937inch

CTLH120M

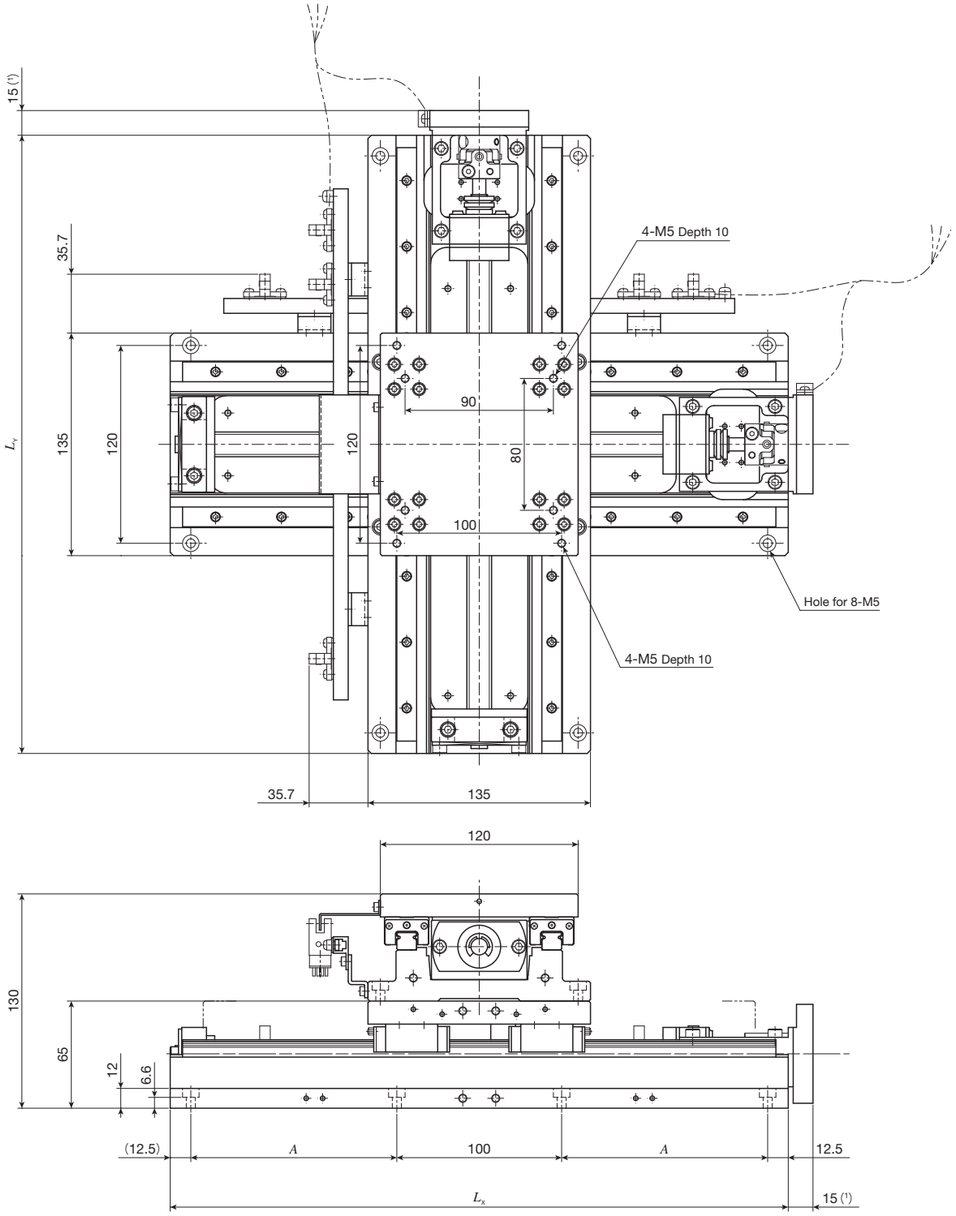

unit: mm

Identification number	Stroke length S		Overall length		Mounting holes of bed A	Mass (Ref.) kg
	X-axis	Y-axis	L_X	L_Y		
CTLH120M-1010	100	100	275	275	75	20
CTLH120M-2010	200	100	375	275	125	22
CTLH120M-2020	200	200	375	375	125	24
CTLH120M-3020	300	200	475	375	175	26
CTLH120M-3030	300	300	475	475	175	28

Note (1) When selecting AT302 or AT308, 21mm is applied.
Remark: As a combination of stroke length other than listed above and a table of different size is possible, please contact IKO.

CTLH220M

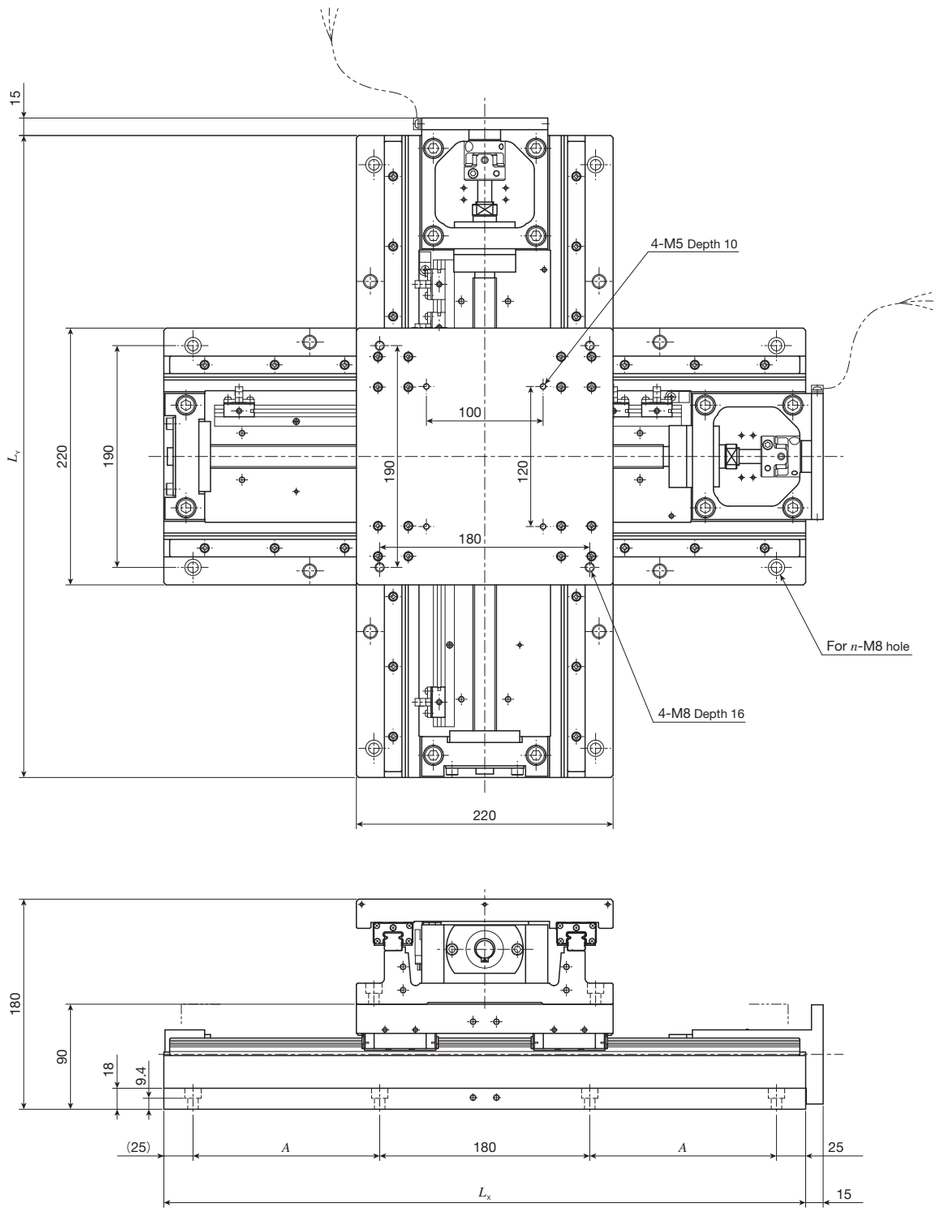

unit: mm

Identification number	Stroke length S		Overall length		Mounting holes of bed		Mass (Ref.) kg
	X-axis	Y-axis	L_X	L_Y	A (the number of holes×pitch)	n	
CTLH220M-2020	200	200	450	450	110	8	67
CTLH220M-3020	300	200	550	450	160	8	71
CTLH220M-3030	300	300	550	550	160	8	76
CTLH220M-4030	400	300	650	550	210 (2×105)	12	80
CTLH220M-4040	400	400	650	650	210 (2×105)	12	84

Remark: As a combination of stroke length other than listed above and a table of different size is possible, please contact IKO.

1N=0.102kgf=0.2248lbs.
1mm=0.03937inch

CTLH320M

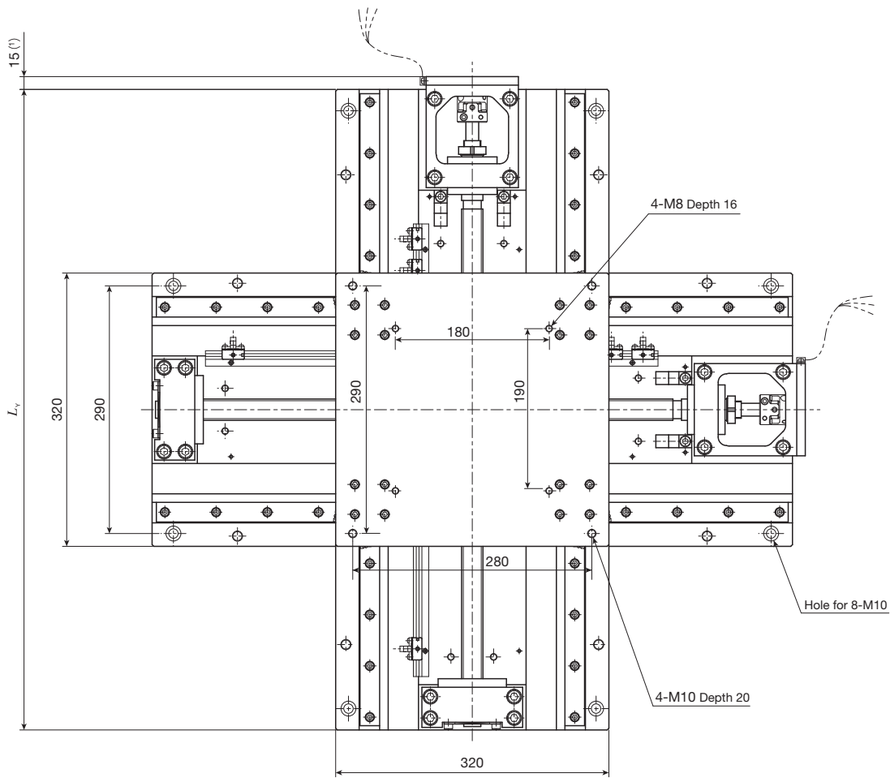

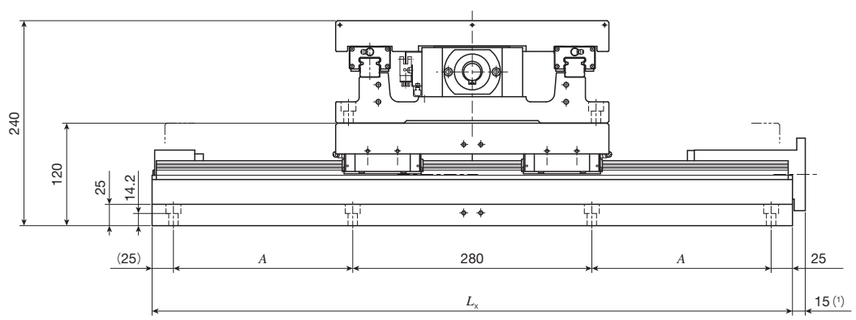

unit: mm

Identification number	Stroke length S		Overall length		Mounting holes of bed A	Mass (Ref.) kg
	X-axis	Y-axis	L_X	L_Y		
CTLH320M-3030	300	300	650	650	160	199
CTLH320M-4030	400	300	750	650	210	209
CTLH320M-4040	400	400	750	750	210	218
CTLH320M-5040	500	400	850	750	260	227
CTLH320M-5050	500	500	850	850	260	236

Note (1) When selecting AT305, 26mm is applied. When selecting AT313, 20mm is applied.
Remark: As a combination of stroke length other than listed above and a table of different size is possible, please consult IKO.

TSLH120M···/J Table with bellows

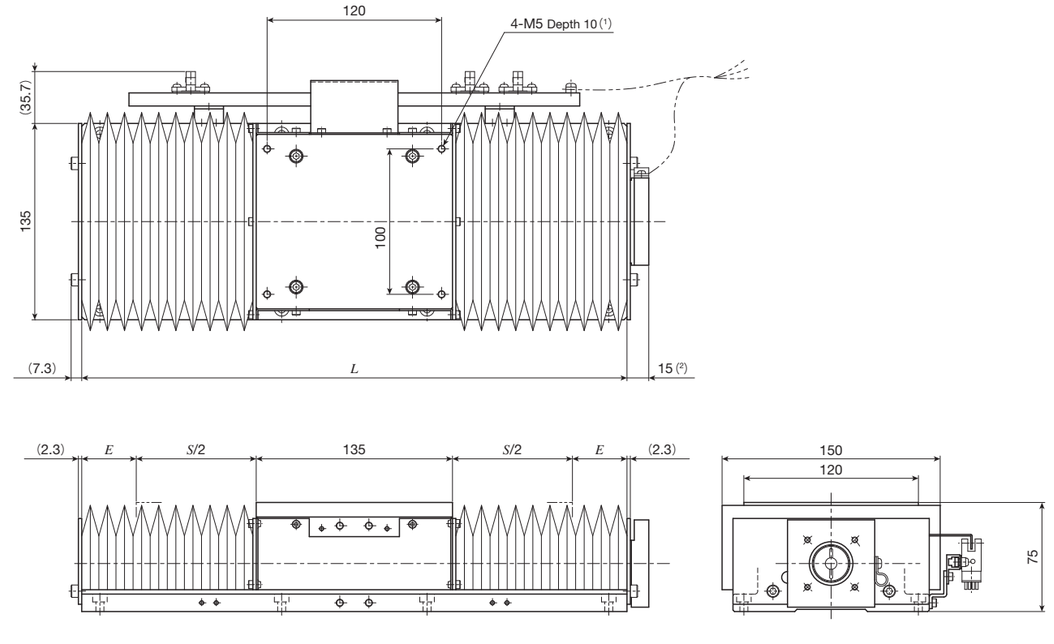

unit: mm

Identification number	Stroke length S	Overall length L	E	Mass (Ref.) kg
TSLH120M-100/J	85	275	27.5	13
TSLH120M-150/J	125	325	32.5	14
TSLH120M-200/J	165	375	37.5	15
TSLH120M-250/J	205	425	42.5	16
TSLH120M-300/J	240	475	50.0	17

Notes (1) Too deep insertion depth of the mounting bolt may affect the running performance of the moving table, so never insert a bolt longer than the depth of the through hole.
(2) When selecting AT302 or AT308, 21mm is applied.
Remarks 1. For the usage in vertical axis, the dimension of the bellows is different, so please contact IKO.
2. For bed mounting dimensions, see the dimension table for TSLH120M.

1N=0.102kgf=0.2248lbs.
1mm=0.03937inch

TSLH220M···/J, TSLH320M···/J, TSLH420M···/J Table with bellows

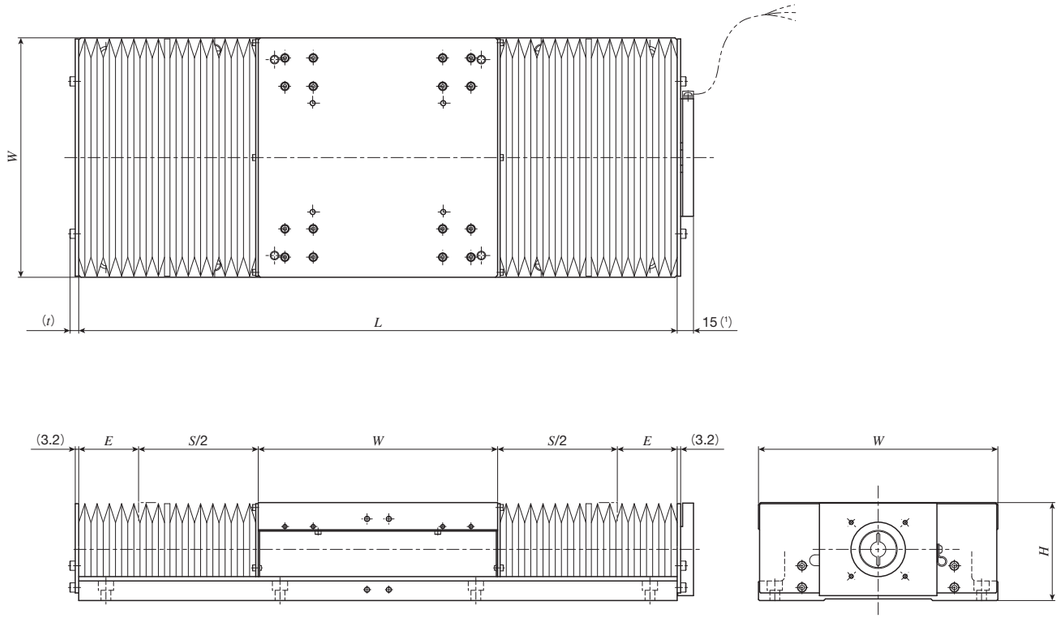

unit: mm

Identification number	Stroke length *S*	Overall length *L*	*W*	*H*	*E*	*t*	Mass (Ref.) kg
TSLH220M- 150/J	110	400	220	90	35	8.2	33
TSLH220M- 200/J	150	450			40		36
TSLH220M- 250/J	180	500			50		38
TSLH220M- 300/J	220	550			55		40
TSLH220M- 400/J	300	650			65		44
(TSLH220M- 500/J)	370	750			80		49
(TSLH220M- 600/J)	440	850			95		53
TSLH320M- 300/J	230	650	320	120	50	9.2	104
TSLH320M- 400/J	310	750			60		113
TSLH320M- 500/J	400	850			65		129
(TSLH320M- 600/J)	480	950			75		131
(TSLH320M- 800/J)	640	1 150			95		151
(TSLH320M-1000/J)	800	1 350			115		169
TSLH420M- 500/J	410	950	420	140	60	10.5	183
TSLH420M- 600/J	500	1 050			65		195
TSLH420M- 800/J	660	1 250			85		219
(TSLH420M-1000/J)	830	1 450			100		244

Note (1) When selecting AT305, 26mm is applied. When selecting AT306, 27mm is applied.
When selecting AT313, 20mm is applied. When selecting AT314, 23mm is applied.
Remarks 1. For the usage in vertical axis, the dimension of the bellows is different, so please contact IKO.
2. If you are interested in a product of identification number shown in ( ), please contact IKO.
3. For mounting dimensions, see the dimension tables for TSLH220M, TSLH320M, and TSLH420M.

CTLH120M···/J Table with bellows

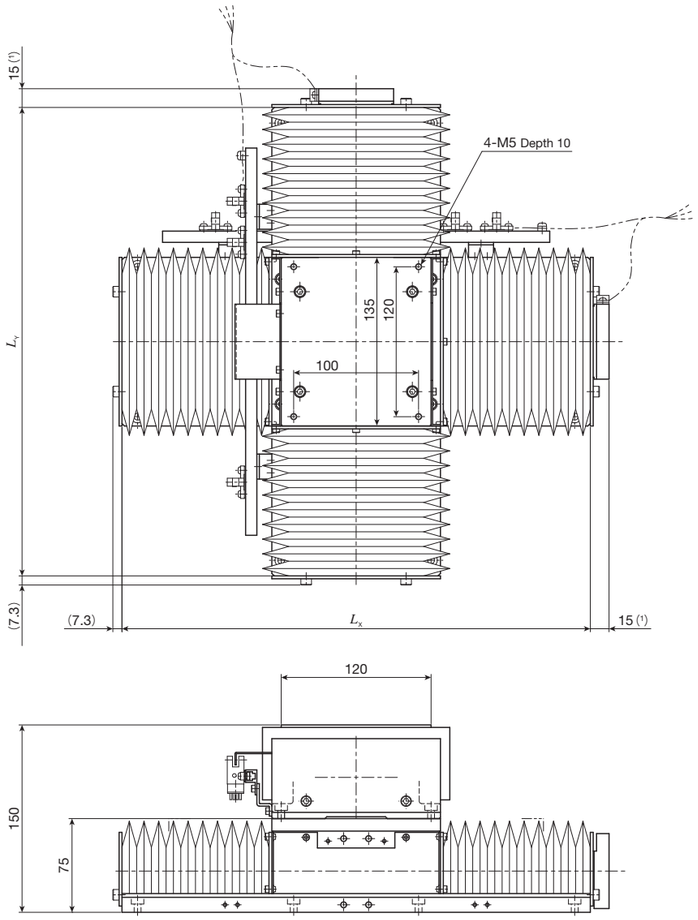

unit: mm

Identification number	Stroke length *S*		Overall length of bed		Mass (Ref.) kg
	X-axis	Y-axis	L_X	L_Y	
CTLH120M-1010/J	85	85	275	275	25
CTLH120M-2010/J	165	85	375	275	27
CTLH120M-2020/J	165	165	375	375	29
CTLH120M-3020/J	240	165	475	375	31
CTLH120M-3030/J	240	240	475	475	33

Note (1) When selecting AT302 or AT308, 21mm is applied.
Remarks 1. For the usage in vertical axis, the dimension of the bellows is different, so please contact IKO.
2. For mounting dimensions, see the dimension table for TSLH120M.

1N=0.102kgf=0.2248lbs.
1mm=0.03937inch

CTLH220M···/J Table with bellows

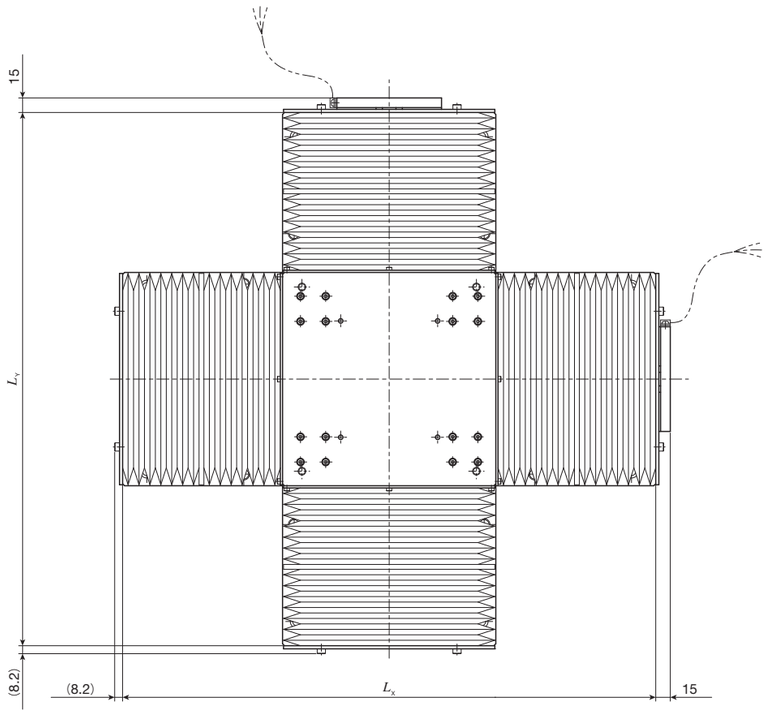

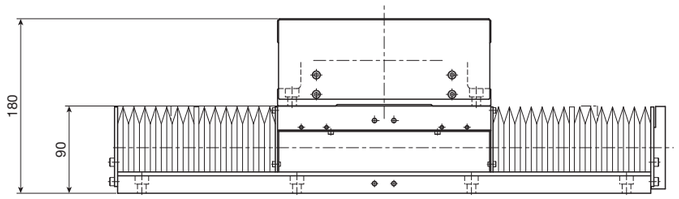

unit: mm

Identification number	Stroke length S		Overall length of bed		Mass (Ref.)
	X-axis	Y-axis	L_X	L_Y	kg
CTLH220M-2020/J	150	150	450	450	71
CTLH220M-3020/J	220	150	550	450	75
CTLH220M-3030/J	220	220	550	550	80
CTLH220M-4030/J	300	220	650	550	84
CTLH220M-4040/J	300	300	650	650	88

Remarks 1. For the usage in vertical axis, the dimension of the bellows is different, so please contact IKO.
2. For mounting dimensions, see the dimension table for TSLH220M.

CTLH320M···/J Table with bellows

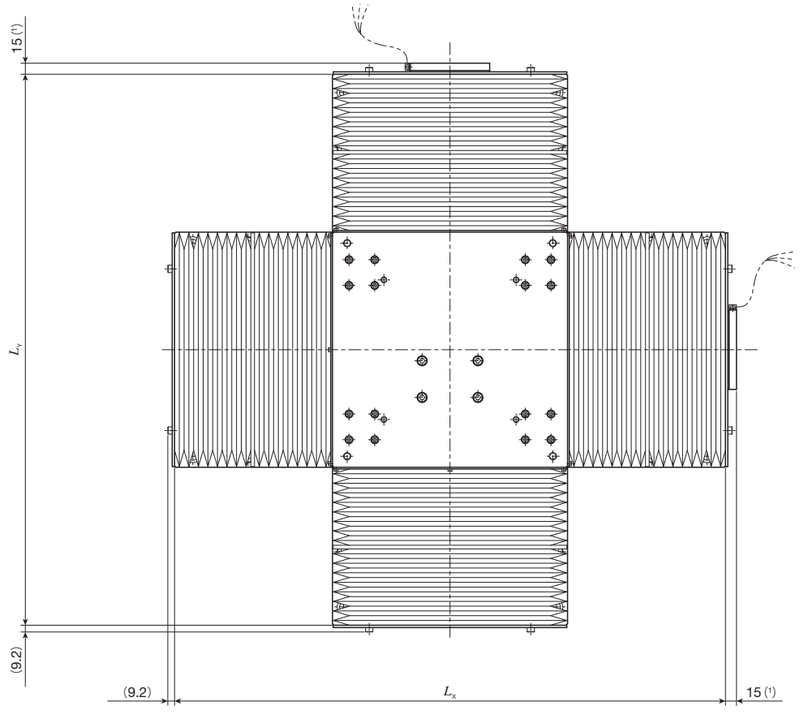

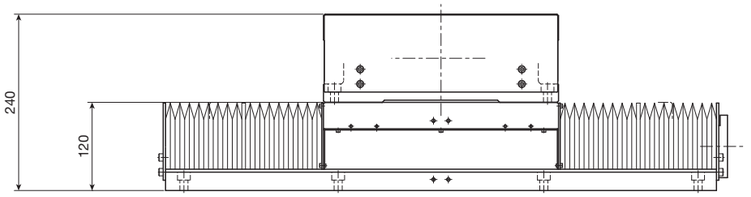

unit: mm

Identification number	Stroke length S		Overall length of bed		Mass (Ref.)
	X-axis	Y-axis	L_X	L_Y	kg
CTLH320M-3030/J	230	230	650	650	207
CTLH320M-4030/J	310	230	750	650	216
CTLH320M-4040/J	310	310	750	750	226
CTLH320M-5040/J	400	310	850	750	235
CTLH320M-5050/J	400	400	850	850	244

Note (1) When selecting AT305, 26mm is applied. When selecting AT313, 20mm is applied.
Remarks 1. For the usage in vertical axis, the dimension of the bellows is different, so please contact IKO.
2. For mounting dimensions, see the dimension table for TSLH320M.

1N=0.102kgf=0.2248lbs.
1mm=0.03937inch

TX…M
CTX…M

TX···M

Ball screw

Linear

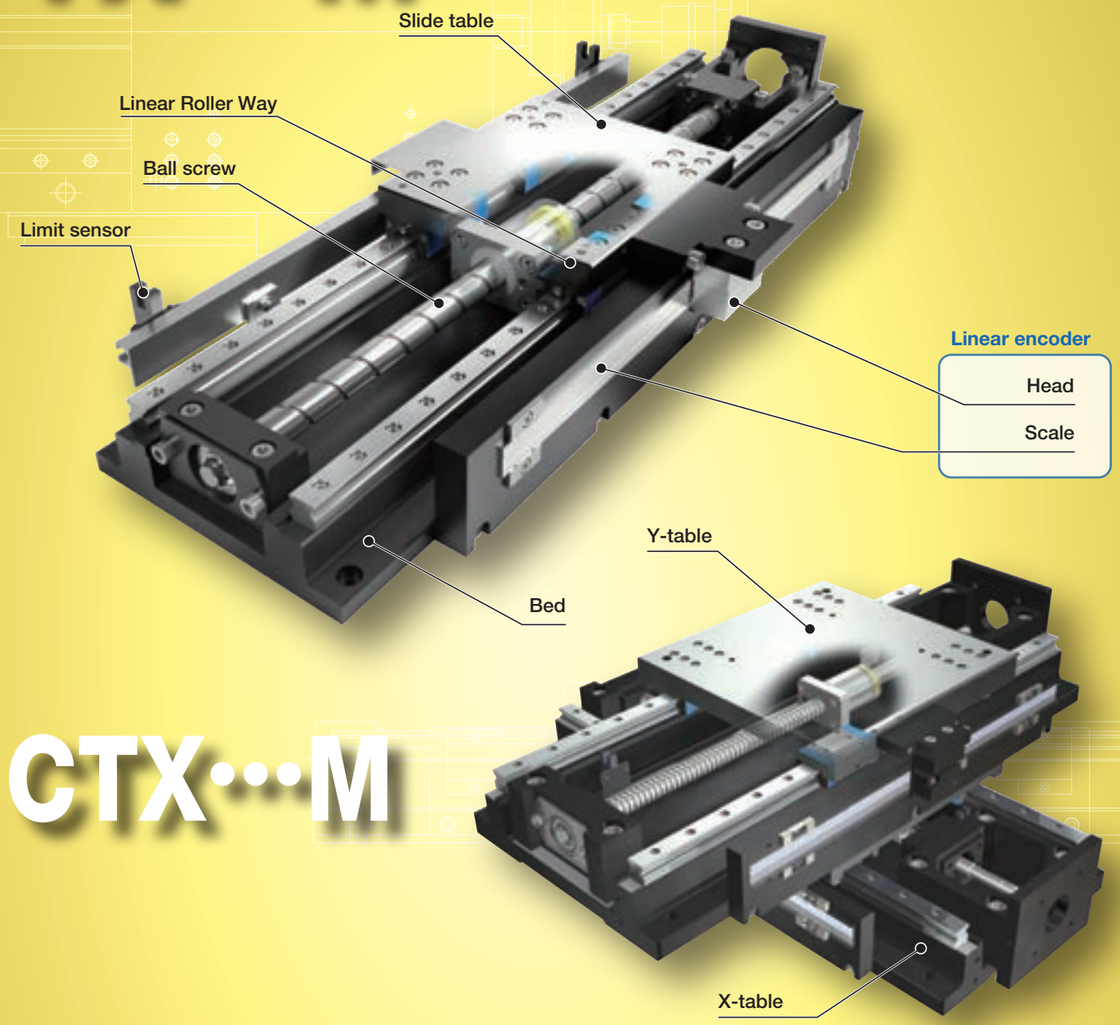

CTX···M

Major product specifications

Driving method	Precision ball screw
Linear motion rolling guide	Linear Roller Way（roller type）
Built-in lubrication part	Lubrication part "C-Lube" is built-in
Material of table and bed	Cast iron
Sensor	Provided as standard

Accuracy

unit: mm

Positioning repeatability	±0.0005～0.0010
Positioning accuracy	0.003～0.020
Lost motion	0.001
Parallelism in table motion A	0.005～0.011
Parallelism in table motion B	–
Attitude accuracy	5～11sec
Straightness	0.003～0.008
Backlash	–

Points

● Ultimate high accuracy table of rolling guide type

1 High precision, high rigidity Precision Positioning Table LH based positioning table with positioning accuracy almost the same as Air Stage with ultimate rolling guide C-Lube Linear Roller Way Super MX incorporated and by a thorough investigation of the accuracy of each part.

● High positioning accuracy and resolution performance realized with an onboard super high accuracy linear encoder

2 Fully closed loop control is configure and the positioning accuracy of the entire stroke is guaranteed with a direct feed back of positional information from a super high accuracy linear encoder.

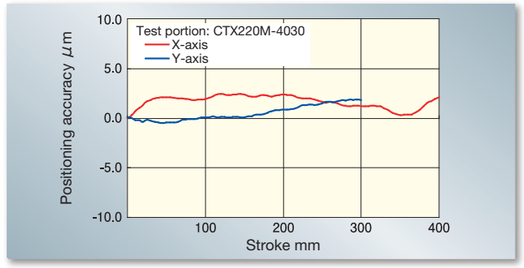

● Ultimate high running performance produced by adopting roller type linear motion rolling guide

3 Ultimate running accuracy is achieved since components processed and assembled with high accuracy are combined with C-Lube Linear Roller Way Super MX that exhibits the highest level of running performance with a rolling guide.

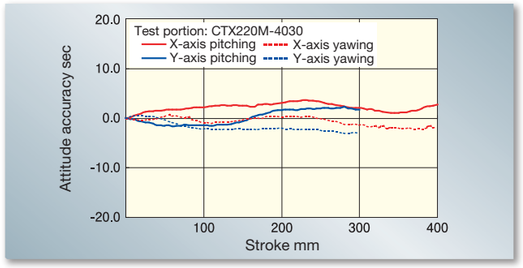

● Absolute linear encoder can be selected

4 For the linear encoder, select either absolute type or incremental type. Absolute types do not require returning to origin and can handle both high resolution and high-speed travel.

● Simple system configuration

5 The simple system configuration provides space saving and cost reduction since an air supply device for driving, like an Air Stage, is not required.

Variation

Shape	Model and size	Table width (mm)	Stroke length（mm）								
			100	150	200	250	300	400	500	600	800
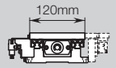	TX120M	120	☆	☆	☆	☆	☆	–	–	–	–
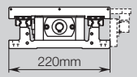	TX220M	220	–	☆	☆	☆	☆	☆	–	–	–
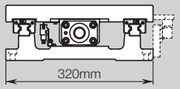	TX320M	320	–	–	–	–	☆	☆	☆	–	–
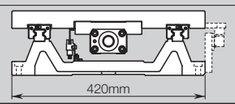	TX420M	420	–	–	–	–	–	–	☆	☆	☆

1N=0.102kgf=0.2248lbs.
1mm=0.03937inch

Identification Number

Example of an Identification Number (Single-axis specification)

1	2	1		3		4	5	6
TX	220	M	-	150	/	AT402	10	SB010

1 Model — Page Ⅱ-153
2 Size — Page Ⅱ-153
3 Stroke length — Page Ⅱ-153
4 Designation of motor attachment — Page Ⅱ-153
5 Ball screw lead — Page Ⅱ-153
6 Designation of linear encoder — Page Ⅱ-153

Identification Number and Specification

1 Model
TX···M: Super Precision Positioning Table TX (single-axis specification)

2 Size
Size indicates table width.
Select a size from the list of Table 1.

3 Stroke length
Select a stroke length from the list of Table 1.

4 Designation of motor attachment
As for a motor attachment, select it from the list of Table 3.
- Motor should be prepared by customer.
- Please specify motor attachment applicable to motor for use.
- A coupling shown in Table 4 is mounted on the main body before shipment. However, the final position adjustment should be made by customer since it is only temporarily fixed.

5 Ball screw lead
5: Lead 5mm
10: Lead 10mm

6 Designation of linear encoder
Select the linear encoder from Table 5.
Without a linear encoder, select the S0000 code.
- When specifying the attachment for a stepper motor, set S0000.
- If using a motor not shown in Table 3, please contact IKO.

Identification Number

Example of an Identification Number (Two-axis specification)

1	2	1	3	4		5	6	7	8
CTX	120	M	-	30	20	/ AT401	5	C	SA000

1 Model — Page Ⅱ-154
2 Size — Page Ⅱ-154
3 X-axis stroke length — Page Ⅱ-154
4 Y-axis stroke length — Page Ⅱ-154
5 Designation of motor attachment — Page Ⅱ-154
6 Ball screw lead — Page Ⅱ-154
7 Designation of combination direction — Page Ⅱ-154
8 Designation of linear encoder — Page Ⅱ-154

Identification Number and Specification

1 Model
CTX···M: Super Precision Positioning Table TX (two-axis specification)

2 Size
Size indicates table width.
Select a size from the list of Table 2.
Tables of different sizes can also be combined.

3 X-axis stroke length
4 Y-axis stroke length
Select a stroke length from the list of Table 2.
Stroke lengths of respective axes are displayed in cm. Different stroke lengths can be specified for X- and Y-axes.

5 Designation of motor attachment
As for a motor attachment, select it from the list of Table 3.
- Motor should be prepared by customer.
- Please specify motor attachment applicable to motor for use.
- A coupling shown in Table 4 is mounted on the main body before shipment. However, the final position adjustment should be made by customer since it is only temporarily fixed.

6 Ball screw lead
5: Lead 5mm
10: Lead 10mm

7 Designation of combination direction
No symbol : Standard configuration
C : Reverse configuration
Standard configuration: A direction under the condition where X-axis motor side is placed at the front and Y-axis motor side is placed on the right side respectively.
Reverse configuration: A direction under the condition where X-axis motor side is placed at the front and Y-axis motor side is placed on the left side respectively.
Specify "No symbol" if 200mm is selected for Y-axis stroke length for CTX220M.

8 Designation of linear encoder
Select the linear encoder from Table 5.
Without a linear encoder, select the S0000 code.
- When specifying the attachment for a stepper motor, set S0000.
- If using a motor not shown in Table 3, please contact IKO.

1N=0.102kgf=0.2248lbs.
1mm=0.03937inch

Table 1 Sizes and stroke lengths of TX

Model and size	Table width mm	Stroke length mm
TX120M	120	100, 150, 200, 250, 300
TX220M	220	150, 200, 250, 300, 400
TX320M	320	300, 400, 500
TX420M	420	500, 600, 800

Table 2 Sizes and stroke lengths of CTX

Model and size	Table width mm	Stroke length mm	
		X-axis	Y-axis
CTX120M	120	100	100
		200	100
		200	200
		300	200
CTX220M	220	200	200
		300	200
		300	300
		400	300

Table 3 Application of motor attachment

Models of motor to be used					Flange size mm	Motor attachment			
Type	Manufacturer	Series	Model	Rated output W		TX120M CTX120M	TX220M CTX220M	TX320M	TX420M
AC servo motor	YASKAWA ELECTRIC CORPORATION	Σ-7	SGM7A-02A	200	□60	AT401	–	–	–
			SGM7A-04A	400		–	AT402	–	–
			SGM7A-06A	600		–	–	AT403	–
			SGM7A-08A	750	□80	–	–	–	AT404
	Mitsubishi Electric Corporation	J4	HG-KR23	200	□60	AT401	–	–	–
			HG-KR43	400		–	AT402	AT403	–
			HG-KR73	750	□80	–	–	–	AT404
	Panasonic Corporation	MINAS A6	MSMF02	200	□60	AT405	–	–	–
			MSMF04	400		–	AT406	AT407	–
			MSMF08	750	□80	–	–	–	AT408
Stepper motor	ORIENTAL MOTOR Co., Ltd.	α step	ARM66		□60	AT409	–	–	–
			ARM69			AT409	–	–	–
			ARM98		□85	–	AT411	AT412	–
			ARM911			–	AT411	AT412	–
		RKS	RKS56		□60	AT409	–	–	–
			RKS59		□85	–	AT411	AT412	–

Remark: For detailed motor specifications, please see respective motor manufacturer's catalog.

Table 4 Coupling models

Motor attachment	Coupling models	Manufacturer	Coupling inertia J_C $\times 10^{-5}$kg · m^2
AT401	RA-30C- 8×14	Sakai Manufacturing Co., Ltd	0.281
AT402	RA-35C-12×14	Sakai Manufacturing Co., Ltd	0.847
AT403	RA-35C-14×15	Sakai Manufacturing Co., Ltd	0.847
AT404	RA-40C-15×19	Sakai Manufacturing Co., Ltd	1.365
AT405	RA-30C- 8×11	Sakai Manufacturing Co., Ltd	0.281
AT406	RA-35C-12×14	Sakai Manufacturing Co., Ltd	0.847
AT407	RA-35C-14×15	Sakai Manufacturing Co., Ltd	0.847
AT408	RA-40C-15×19	Sakai Manufacturing Co., Ltd	1.365
AT409	RA-30C- 8×10	Sakai Manufacturing Co., Ltd	0.281
AT411	RA-35C-12×14	Sakai Manufacturing Co., Ltd	0.847
AT412	RA-35C-14×15	Sakai Manufacturing Co., Ltd	0.847

Remark: For detailed coupling specifications, please see respective manufacturer's catalog.

Table 5 Linear encoder code

Linear encoder type	Symbol	Supported AC servomotors	Resolution [μm]	Linear encoder model
Without linear encoder	S0000	–	–	–
Incremental linear encoder	SA000	Yaskawa Electric Corporation Σ-7	Variable	HEIDENHAIN K.K. LIF181R
	SC000		Variable	Renishaw plc. TONiC
	SB010	Mitsubishi Electric Corporation J4 and Panasonic Corporation MINAS A6	0.01	HEIDENHAIN K.K. LIF181R
	SB020		0.02	
	SB040		0.04	
	SB050		0.05	
	SB100		0.1	
	SB200		0.2	
	SD010		0.01	Renishaw plc. VIONiC
	SD020		0.02	
	SD040		0.04	
	SD050		0.05	
	SD100		0.1	
	SD200		0.2	
Absolute linear encoder	SE050	Yaskawa Electric Corporation Σ-7	0.05	Renishaw plc. RESOLUTE
	SF050	Mitsubishi Electric Corporation J4	0.05	
	SG050	Panasonic Corporation MINAS A6	0.05	

Remarks 1. For details of SA000 and SC000 variable resolution, see Table 7.
2. For linear encoder specification, see Table 11.

Specifications

Table 6 Accuracy

unit: mm

Model and size		Stroke length		Positioning Repeatability	Positioning accuracy	Lost motion(1)	Parallelism in table motion A	Attitude accuracy (2) sec	Straightness in vertical Straightness in horizontal	Squareness of XY motion
		X-axis	Y-axis							
Single-axis specification	TX120M	100		±0.0005 (±0.001)	0.003 (0.006)	0.001	0.005	5	0.003	–
		150								
		200								
		250			0.004 (0.008)		0.006	6	0.004	
		300								
	TX220M	150		±0.0005 (±0.001)	0.003 (0.006)	0.001	0.005	5	0.003	–
		200			0.004 (0.008)		0.006	6	0.004	
		250								
		300								
		400			0.005 (0.013)		0.007	7	0.005	
	TX320M	300		±0.0005 (±0.001)	0.004 (0.008)	0.001	0.006	6	0.004	–
		400			0.005 (0.013)		0.007	7	0.005	
		500								
	TX420M	500		±0.0005 (±0.001)	0.005 (0.013)	0.001	0.007	7	0.005	–
		600			0.006 (0.016)		0.008	8	0.006	
		800			0.008 (0.020)		0.009	9	0.008	
Two-axis specification	CTX120M	100	100	±0.0005 (±0.001)	0.005 (0.007)	0.001	0.008	8	0.005	0.005
		200	100		0.005 (0.010)					0.010
		200	200							
		300	200							
	CTX220M	200	200	±0.0005 (±0.001)	0.006 (0.010)	0.001	0.009	9	0.006	0.005
		300	200							0.010
		300	300							
		400	300		0.008 (0.010)		0.011	11	0.008	

Notes (1) When no linear encoder is used, this represents the value for backlash.
(2) This represents accuracy in pitching and yawing.
Remark: The values in ( ) indicate values without a linear encoder.

1N=0.102kgf=0.2248lbs.
1mm=0.03937inch

Table 7 Maximum speed attained when a motor manufactured by YASKAWA ELECTRIC CORPORATION is used (with incremental linear encoder)

Designation of linear encoder	Resolution μm/pulse	Maximum speed mm/s		Linear encoder	Serial conversion unit (1)
		Lead 5mm	Lead 10mm		
SA000	0.0156	62.5	62.5	HEIDENHAIN K.K. LIF181R	Yaskawa Electric Corporation JZDP-H003-000
	0.0312	125	125		
	0.0625	250 (224)	250 (224)		
	0.125		500 (448)		
	0.250				
	0.500				
SC000	0.0781	250 (224)	312.5	Renishaw plc. TONiC	Yaskawa Electric Corporation JZDP-H005-000
	0.156		500 (448)		
	0.312				
	0.625				
	1.25				
	2.5				

Note (1) Serial conversion unit is attached.
Remarks 1. The values in ( ) are applicable to TX320M and TX420M.
2. Practical maximum speed varies depending on load condition.
3. To change the maximum speed, the resolution needs to be changed by setting the electronic gear for driver.

Table 8 Maximum speed attained when a motor manufactured by Mitsubishi Electric Corporation or Panasonic Corporation is used (with incremental linear encoder)

Designation of linear encoder	Resolution μm/pulse	Maximum speed mm/s		Linear encoder	Linear encoder signal conversion unit (1)
		Lead 5mm	Lead 10mm		
SB010	0.01	40 (2)	40 (2)	HEIDENHAIN K.K. LIF181R	HEIDENHAIN K.K. IBV3271 100F (1)
SB020	0.02	80 (2)	80 (2)		HEIDENHAIN K.K. IBV3271 50F (1)
SB040	0.04	160 (2)	160 (2)		HEIDENHAIN K.K. IBV3271 25F (1)
SB050	0.05	200 (2)	200 (2)		HEIDENHAIN K.K. IBV3271 20F (1)
SB100	0.1	250 (224)	400 (2)		HEIDENHAIN K.K. IBV3171 10F (1)
SB200	0.2	250 (224)	500 (448)		HEIDENHAIN K.K. IBV3171 5F (1)
SD010	0.01	40	40	Renishaw plc. VIONiC	–
SD020	0.02	80	80		
SD040	0.04	160	160		
SD050	0.05	200	200		
SD100	0.1	250 (224)	400		
SD200	0.2	250 (224)	500 (448)		

Notes (1) A linear encoder signal conversion unit corresponding to resolution is attached (Made by HEIDENHAIN K.K).
(2) Because the allowable value of the linear encoder signal conversion unit maximum response frequency is ±5%, the maximum speed may decrease by 5%.
Remarks 1. The values in ( ) are applicable to TX320M and TX420M.
2. Practical maximum speed varies depending on load condition.
3. The included linear encoder signal conversion unit has model numbers set by resolution, so the resolution cannot be changed.

Table 9 Maximum speed attained when a motor manufactured by Yaskawa Electric Corporation, Mitsubishi Electric Corporation, or Panasonic Corporation is used (with absolute linear encoder)

Designation of linear encoder	Resolution μm/pulse	Maximum speed mm/s		Linear encoder	Linear encoder signal conversion unit
		Lead 5mm	Lead 10mm		
SE050	0.05	250 (224)	500 (448)	Renishaw plc. RESOLUTE	–
SF050	0.05	250 (224)	500 (448)		
SG050	0.05	250 (224)	500 (448)		

Remarks 1. The values in ( ) are applicable to TX320M and TX420M.
2. Practical maximum speed varies depending on load condition.
3. The included linear encoder signal conversion unit has model numbers set by resolution, so the resolution cannot be changed.

Table 10 Maximum speed attained when no linear encoder is used

Motor type	Model and size	Maximum speed mm/s	
		Lead 5mm	Lead 10mm
AC servo motor	TX120M	250	500
	TX220M		
	TX320M	224	448
	TX420M		
Stepper motor	TX120M	150	300
	TX220M		
	TX320M		

Remark: The values of respective axes in tables of two-axis specification are the same as those of tables of single-axis specification.

Table 11 Linear encoder specification

Item		Content			
Model		LIF181R	TONiC	VIONiC	RESOLUTE
Manufacturer		HEIDENHAIN K.K.	Renishaw plc		
Material of scale main body		Glass	Low expansion nickel alloy		
Coefficient of linear expansion	/℃	8×10^{-6}	$0.75\pm0.35\times10^{-6}$		
Accuracy class	μm/m	±1	±1	±1	±1
Output type		Sine wave (1Vpp)	Sine wave (1Vpp)	Square wave	Serial communication
Signal cycle	μm	4	20	20	30
Maximum operation speed	m/sec	4	10	12	100
Cord length	m	3	3	3	3
Cord diameter	mm	φ4.5	φ4.25±0.25	φ4.25±0.25	φ4.7±0.2
Cord bending radius	mm	When movable: 50 or more When fixed: 10 or more	When movable: 20 or more When fixed: 10 or more	When movable: 30 or more When fixed: 10 or more	When movable: 20 or more When fixed: 10 or more

Table 12 Serial conversion unit specification for YASKAWA ELECTRIC CORPORATION

Item		Content	
Linear encoder model		HEIDENHAIN K.K. LIF181R	Renishaw plc. TONiC
		JZDP-H003-000	JZDP-H005-000
Signal resolution		1/256 of input two phase sine wave pitch	
Maximum responding frequency	kHz	250	
Size	mm	90×60×23	
Mass	kg	0.15	

Remark The connection cable for the serial conversion unit and driver must be prepared by the customer.

Model: JZDP-H003-000

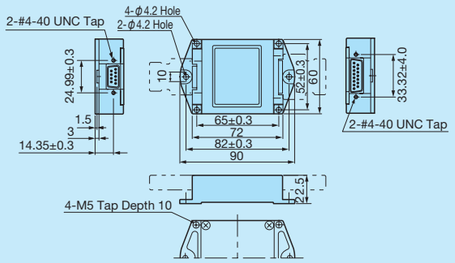

Model: JZDP-H005-000

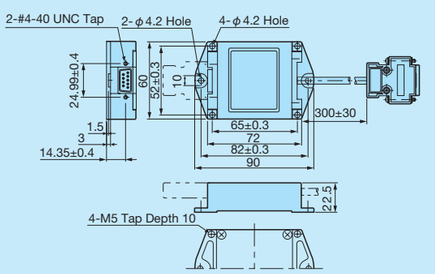

Remark Excerpted from YASKAWA ELECTRIC CORPORATION materials

Table 13 Linear encoder signal conversion unit specification for Panasonic Corporation and Mitsubishi Electric Corporation

Item		Content					
Linear encoder model		HEIDENHAIN K.K. IBV 3171 [5F, 10F] 0.22μs		HEIDENHAIN K.K. IBV 3271 [20F,25F,50F,100F] 0.22μs			
Signal resolution		Input two phase sine wave pitch ÷ 4-time multiplication ÷ electronic division ratio					
Maximum responding frequency (1)	kHz	5F : 200	10F : 200	20F : 100	25F : 80	50F : 40	100F : 20
Size	mm	Converter part: 50×41×16					
		Connector part: 48×42×17					
		Cord length: 1000					
Mass	kg	0.13					

Remark The connection cable for the signal conversion unit and driver must be prepared by the customer.

Table 14 Maximum carrying mass

Model and size	Ball screw lead mm	Maximum carrying mass kg	
		Horizontal	Vertical
TX120M	5	254	28
	10	154	28
TX220M	5	382	30
	10	187	29
TX320M	5	536	27
	10	254	25
TX420M	5	519	10
	10	237	8

1N=0.102kgf=0.2248lbs.
1mm=0.03937inch

Table 15 Specifications of linear motion rolling guide

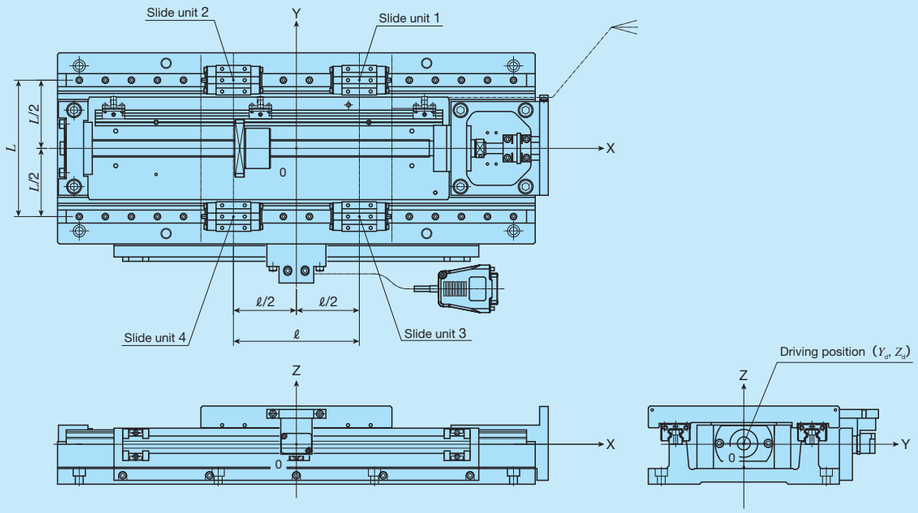

Model and size	Basic dynamic load rating(1) C N	Basic static load rating(1) C_0 N	Arrangement			
			L mm	ℓ mm	Y_d mm	Z_d mm
TX120M	6 120	10 400	88	82	0	2
TX220M	11 500	20 000	157	145	0	1
TX320M	32 100	56 300	240	210	0	6
TX420M	38 200	70 300	300	290	0	0

Note (1) Represent the value per slide unit.
Remark: The values of respective axes in tables of two-axis specification are the same as those of tables of single-axis specification.

Table 16.1 Specifications of ball screw 1

Model and size	Ball screw type	Lead mm	Shaft dia. mm	Axial clearance mm	Basic dynamic load rating C N	Basic static load rating C_0 N
TX120M	Ground screw	5	15	0	7 070	12 800
		10			7 070	12 800
TX220M	Ground screw	5	20	0	8 230	17 150
		10			10 900	21 700
TX320M	Ground screw	5	25	0	16 700	43 500
		10			15 800	32 700
TX420M	Ground screw	5	25	0	16 700	43 500
		10			15 800	32 700

Remark: The values of respective axes in tables of two-axis specification are the same as those of tables of single-axis specification.

Table 16.2 Specifications of ball screw 2

unit: mm

Model and size	Stroke length	Shaft dia.	Overall length
TX120M	100	15	256
	150		306
	200		356
	250		406
	300		456
TX220M	150	20	370
	200		420
	250		470
	300		520
	400		620
TX320M	300	25	616
	400		716
	500		816
TX420M	500	25	916
	600		1 016
	800		1 216

Table 17 Table inertia and starting torque

Model and size		Stroke length mm		Table inertia J_T $\times 10^{-5}$kg·m²		Coupling inertia J_C $\times 10^{-5}$kg·m²	Starting torque T_S N·m
		X-axis	Y-axis	Lead 5mm	Lead 10mm		
Single-axis specification	TX120M	100		1.3	1.8	0.29	0.07
		150		1.5	2.0		
		200		1.6	2.2		
		250		1.8	2.4		
		300		2.0	2.6		
	TX220M	150		5.2	7.0	0.85	0.12
		200		5.8	7.6		
		250		6.4	8.2		
		300		7.1	8.8		
		400		8.3	10		
	TX320M	300		20	26	0.85	0.26
		400		23	29		
		500		26	32		
	TX420M	500		30	39	0.85	0.30
		600		33	42		
		800		39	48		
Two-axis specification	CTX120M	100	100	2.1	4.7	0.29	0.07
		200	100	2.4	5.1		
		200	200	2.5	5.8		
		300	200	2.9	6.2		
	CTX220M	200	200	8.2	16.9	0.85	0.13
		300	200	9.5	18.1		
		300	300	9.8	19.3		
		400	300	11.0	20.5		

Remark: As for tables of two-axis specification, the figures represent values in X-axis. For values in Y-axis, see the table for single-axis specification.

Mounting

For the processing accuracy of the Precision Positioning Table mounting surface and the tightening torque of the fixing screws, see page Ⅲ-29.

1N=0.102kgf=0.2248lbs.
1mm=0.03937inch

Sensor Specification

Table 18 Sensor timing chart

Specifications without linear encoder and with incremental linear encoder

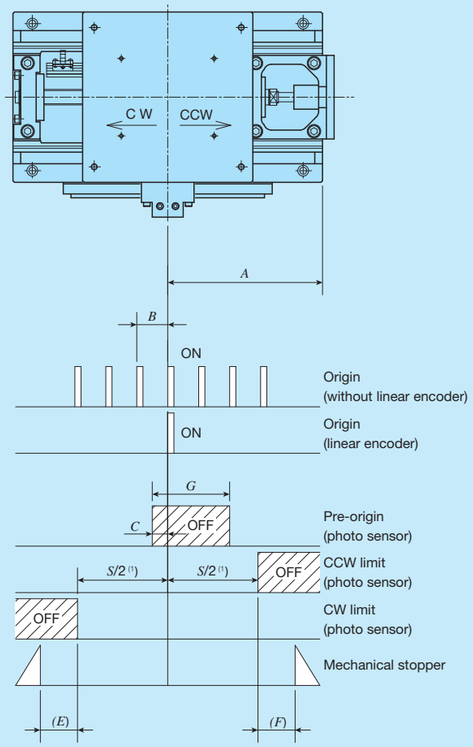

Specifications with absolute linear encoder

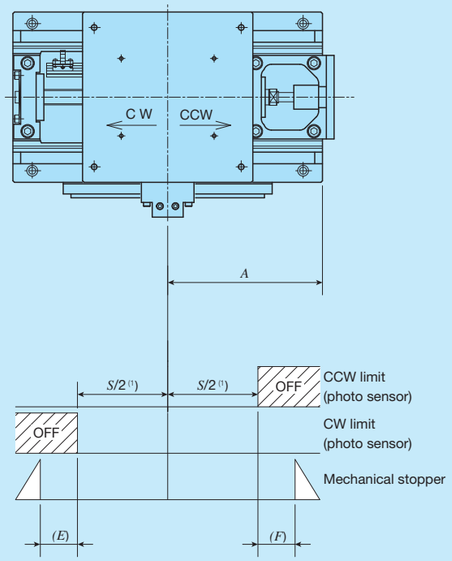

unit: mm

Model and size	Ball screw lead	*A*	*B*	*C*	*E*	*F*	*G*
TX120M	**5**	*L*/2 (1)	5	3	5.5	4.5	60
	10		10	7			
TX220M	**5**	*L*/2 (1)	5	3	14	10	58
	10		10	7	12	10	
TX320M	**5**	*L*/2 (1)	5	3	20	15	80
	10		10	7			
TX420M	**5**	*L*/2 (1)	5	3	18	15	100
	10		10	7			

Note (1) See the dimension tables on page Ⅱ-163 to Ⅱ-168.

Remarks 1. For detailed specifications of respective sensors, please see the section of sensor specification in General Explanation.

2. The values of respective axes in tables of two-axis specification are the same as those of tables of single-axis specification.

Dimensions of Motor Attachment

TX120M, CTX120M

AT401

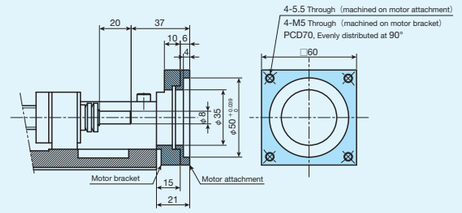

AT405

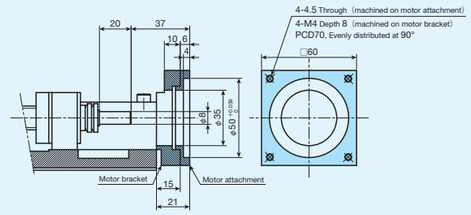

AT409

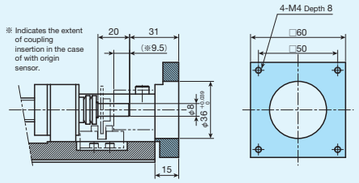

TX220M, CTX220M

AT402

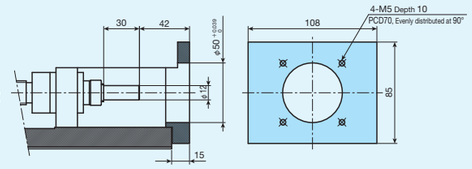

AT406

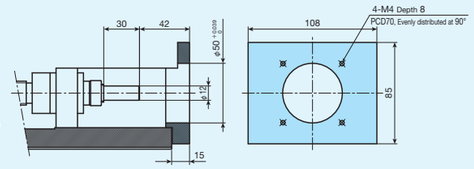

AT411

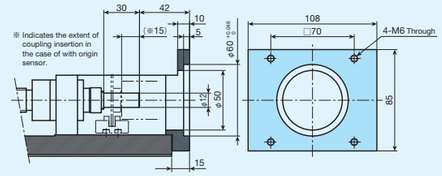

TX320M

AT403

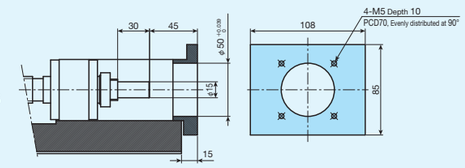

AT407

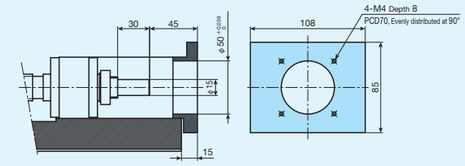

AT412

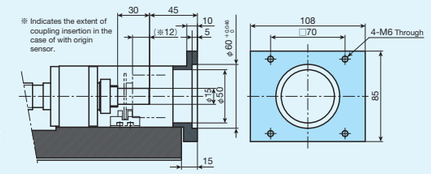

TX420M

AT404

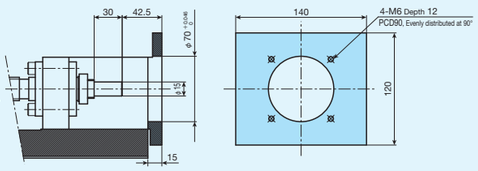

AT408

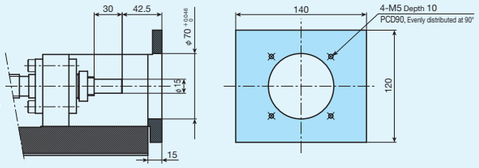

1N=0.102kgf=0.2248lbs.
1mm=0.03937inch

IKO Super Precision Positioning Table TX

TX120M

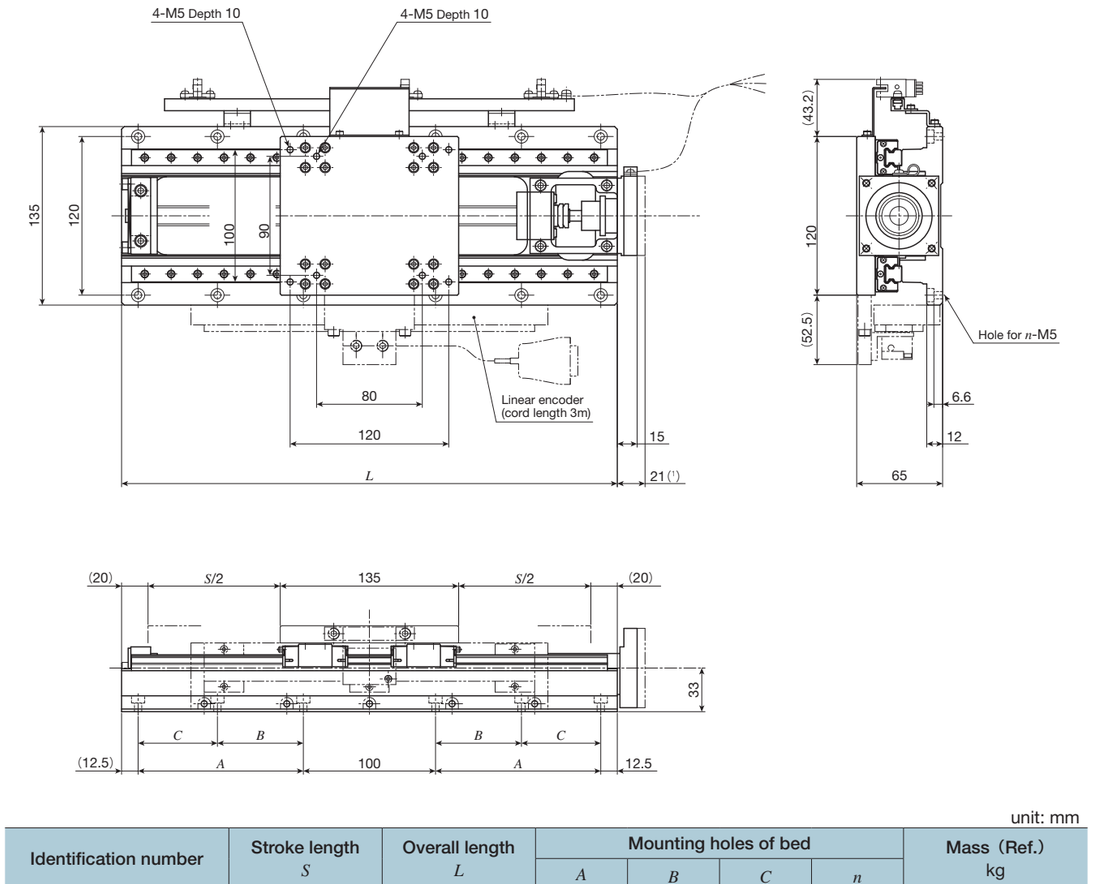

unit: mm

Identification number	Stroke length S	Overall length L	Mounting holes of bed				Mass (Ref.) kg
			A	B	C	n	
TX120M-100	100	275	75	–	–	8	12
TX120M-150	150	325	100	–	–	8	13
TX120M-200	200	375	125	–	–	8	14
TX120M-250	250	425	150	75	75	12	16
TX120M-300	300	475	175	100	75	12	17

Note (1) This applies to AT401 and AT405.

TX220M

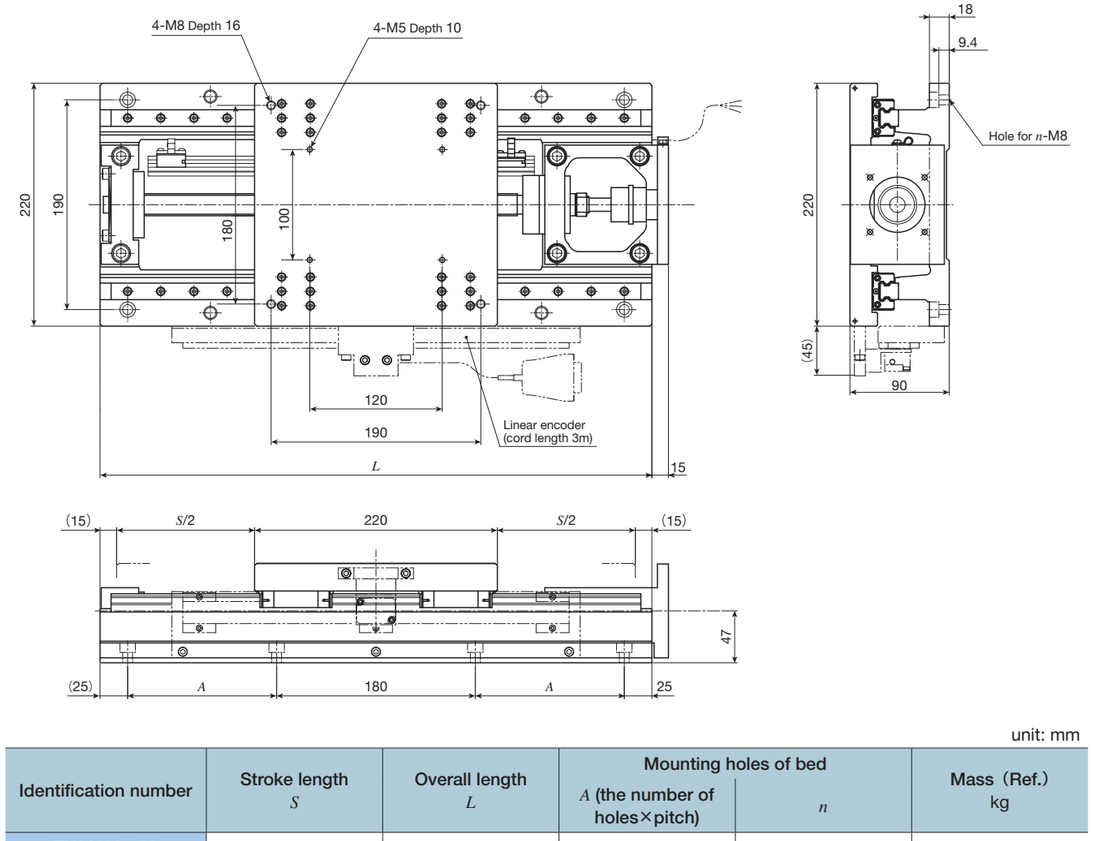

unit: mm

Identification number	Stroke length S	Overall length L	Mounting holes of bed		Mass (Ref.) kg
			A (the number of holes×pitch)	n	
TX220M-150	150	400	85	8	34
TX220M-200	200	450	110	8	37
TX220M-250	250	500	135	8	39
TX220M-300	300	550	160	8	42
TX220M-400	400	650	210 (2×105)	12	47

1N=0.102kgf=0.2248lbs.
1mm=0.03937inch

IKO Super Precision Positioning Table TX

TX320M

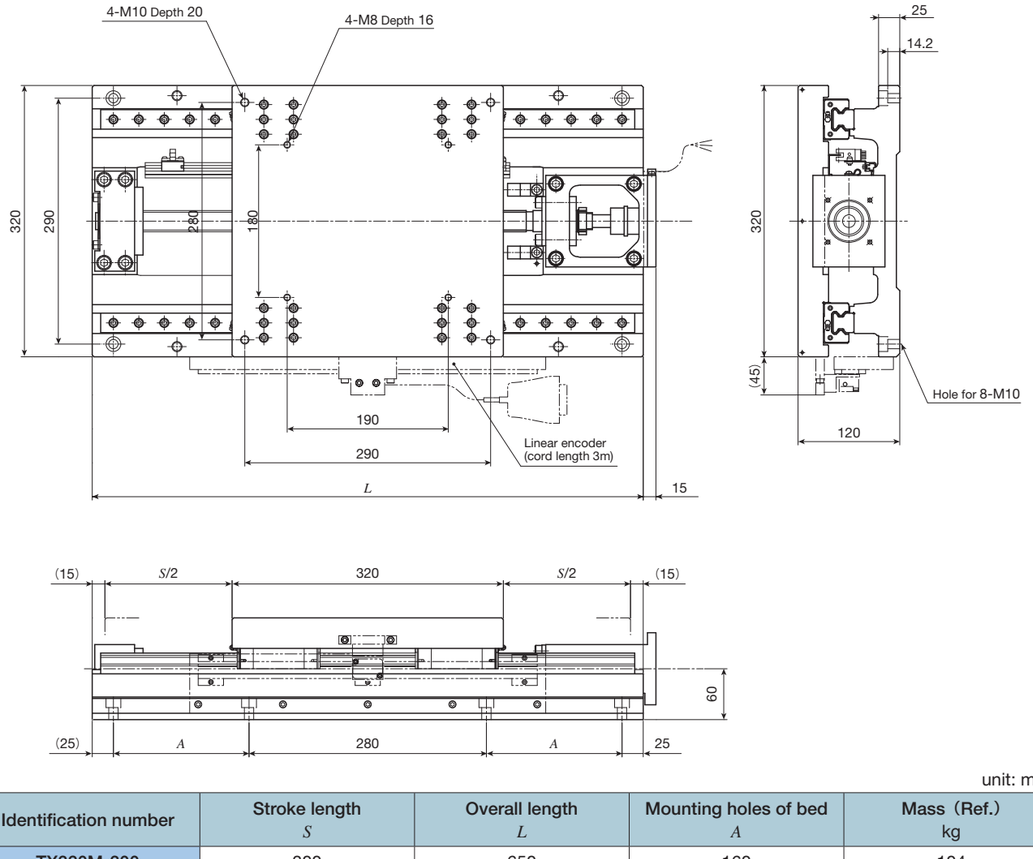

unit: mm

Identification number	Stroke length S	Overall length L	Mounting holes of bed A	Mass (Ref.) kg
TX320M-300	300	650	160	104
TX320M-400	400	750	210	115
TX320M-500	500	850	260	124

TX420M

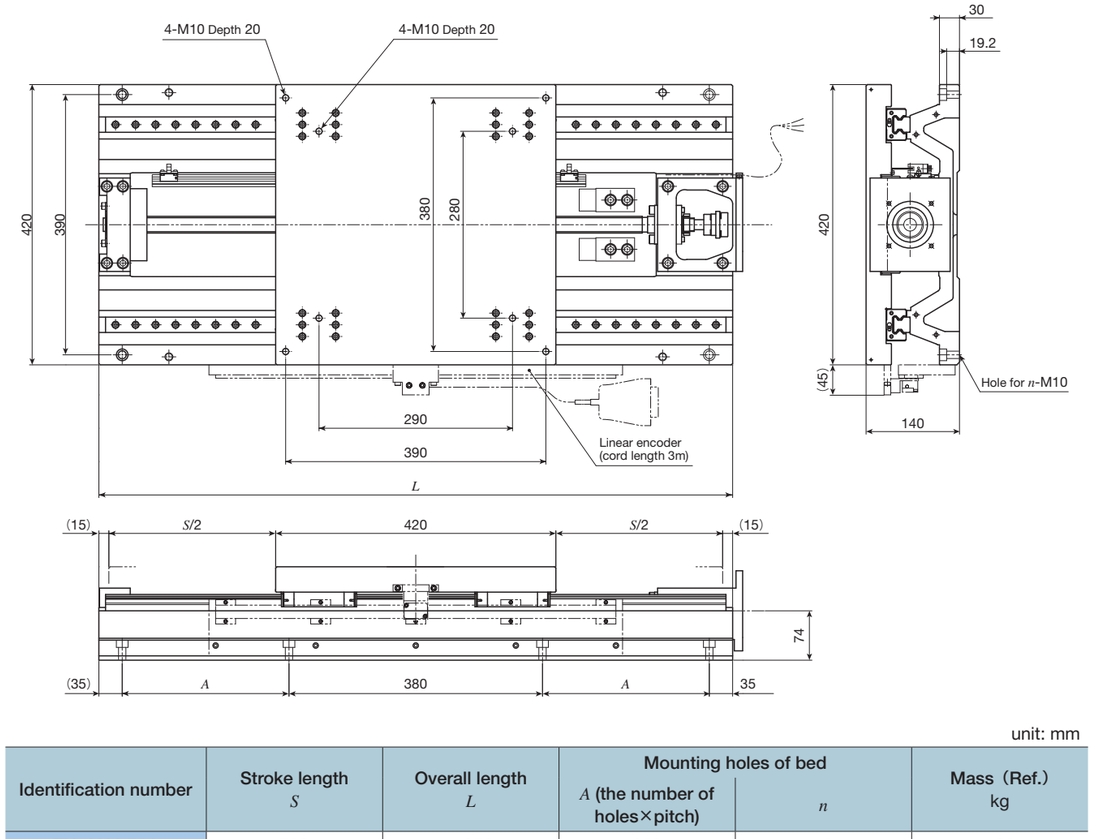

unit: mm

Identification number	Stroke length S	Overall length L	Mounting holes of bed A (the number of holes×pitch)	Mounting holes of bed n	Mass (Ref.) kg
TX420M-500	500	950	250	8	183
TX420M-600	600	1 050	300	8	197
TX420M-800	800	1 250	400 (2×200)	12	223

1N=0.102kgf=0.2248lbs.
1mm=0.03937inch

CTX120M

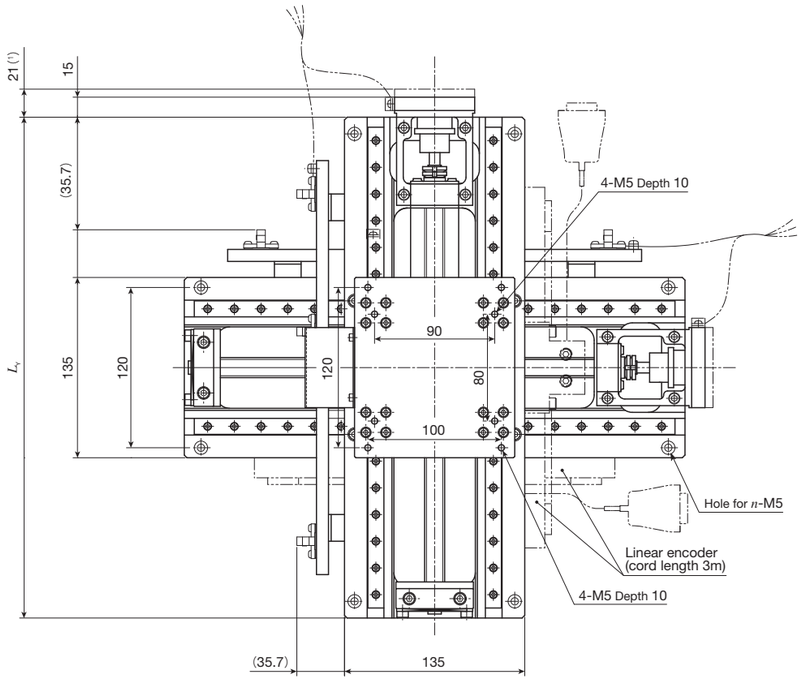

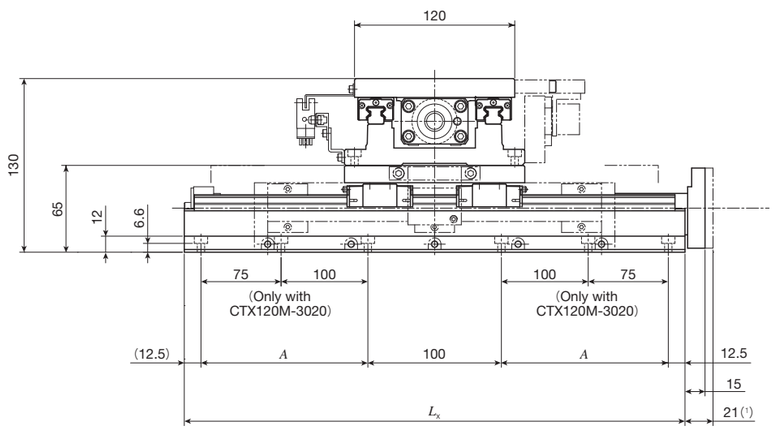

unit: mm

Identification number	Stroke length S		Overall length		Mounting holes of bed		Mass (Ref.)
	X-axis	Y-axis	L_X	L_Y	A	n	kg
CTX120M-1010	100	100	275	275	75	8	23
CTX120M-2010	200	100	375	275	125	8	26
CTX120M-2020	200	200	375	375	125	8	28
CTX120M-3020	300	200	475	375	175	12	31

Note (1) This applies to AT401 and AT405.
Remarks 1. The combination for CTX in the above figure is the standard configuration.
2. Since other combinations of stroke lengths other than those listed above, different table sizes, as well as production of cableveyor specification are possible, please contact IKO.

CTX220M

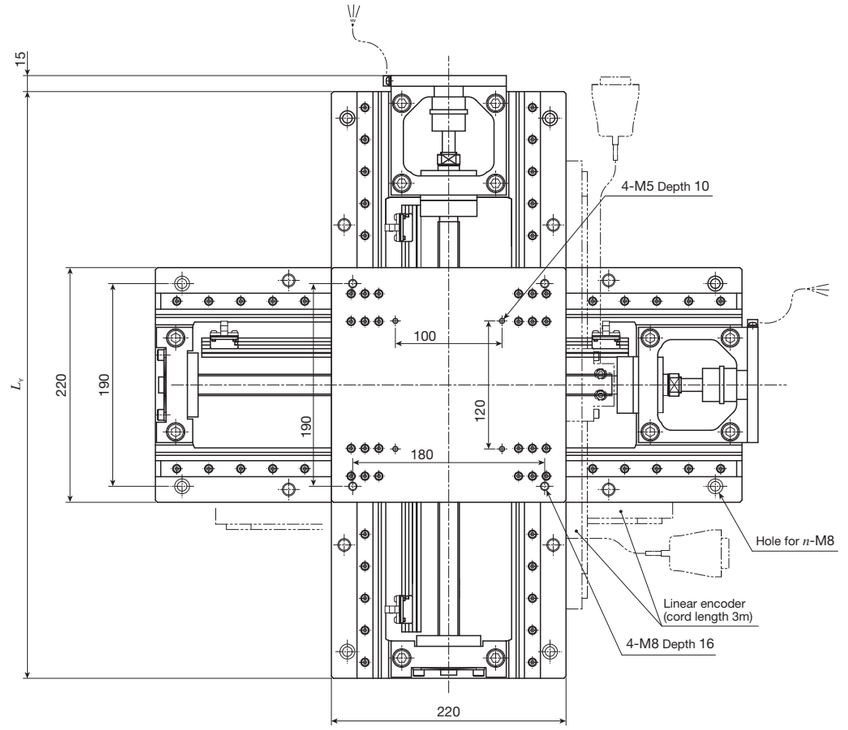

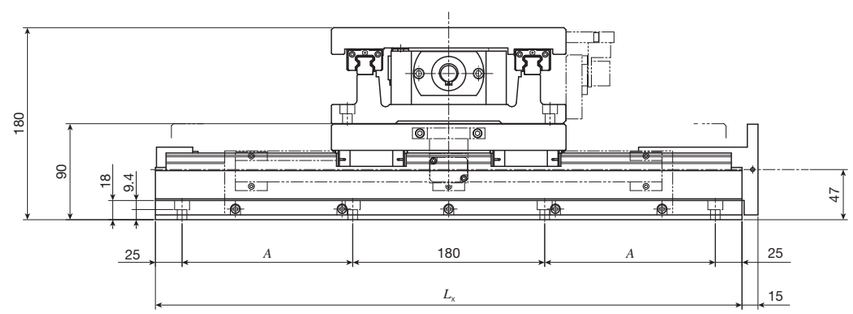

unit: mm

Identification number	Stroke length S		Overall length		Mounting holes of bed		Mass (Ref.)
	X-axis	Y-axis	L_X	L_Y	A (the number of holes×pitch)	n	kg
CTX220M-2020	200	200	450	450	110	8	73
CTX220M-3020	300	200	550	450	160	8	78
CTX220M-3030	300	300	550	550	160	8	83
CTX220M-4030	400	300	650	550	210 (2×105)	12	88

Remarks 1. The combination for CTX in the above figure is the standard configuration.
2. Since other combinations of stroke lengths other than those listed above, different table sizes, as well as production of cableveyor specification are possible, please contact IKO.

1N=0.102kgf=0.2248lbs.
1mm=0.03937inch

TC…EB

TC···EB

Ball screw

Linear

C-Lube Maintenance-free

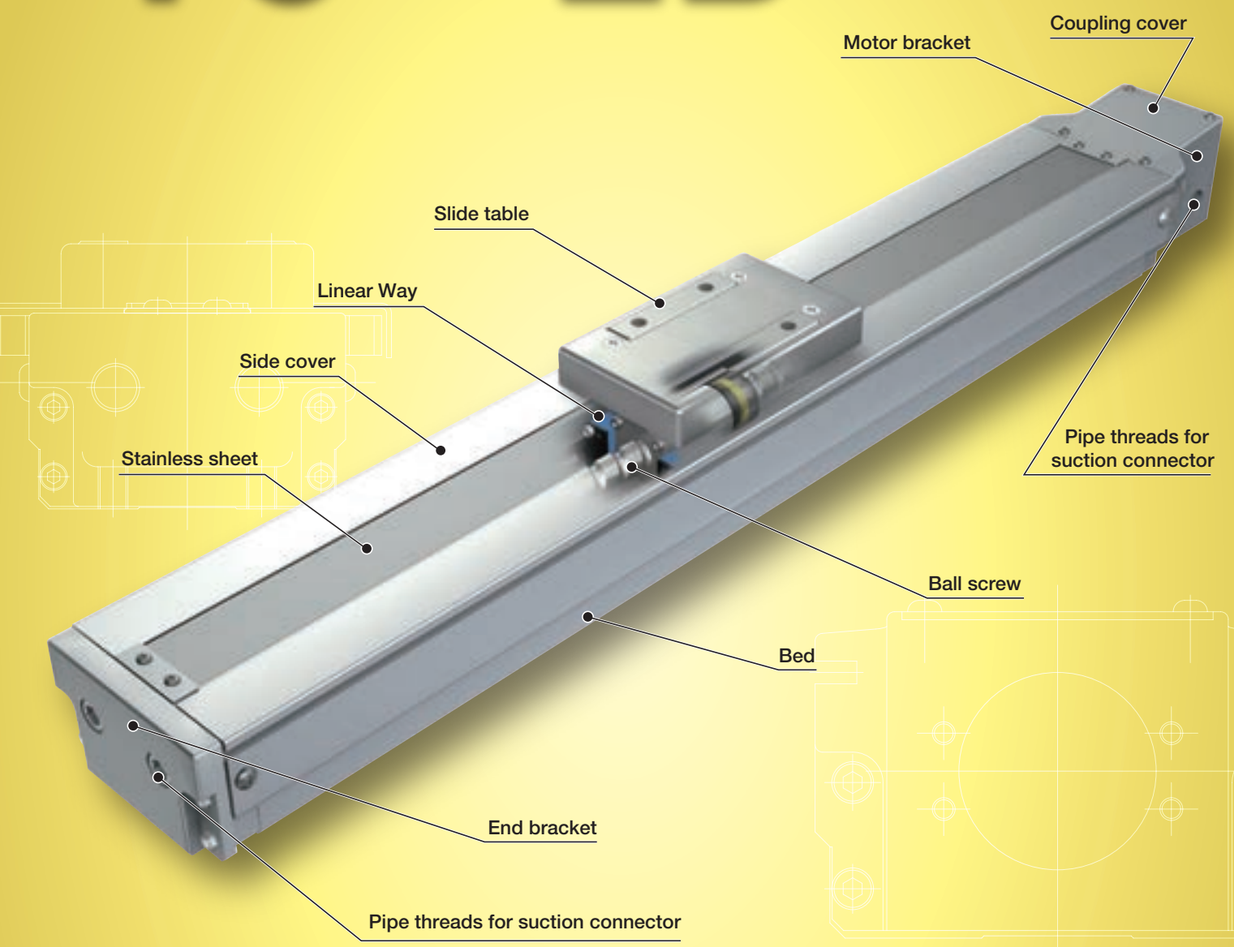

Major product specifications

Driving method	Precision ball screw
Linear motion rolling guide	Linear Way（ball type）
Built-in lubrication part	Lubrication part "C-Lube" is built-in
Material of table and bed	High-strength aluminum alloy
Sensor	Select by identification number

Accuracy

unit: mm

Positioning repeatability	±0.002
Positioning accuracy	0.035～0.065
Lost motion	–
Parallelism in table motion A	–
Parallelism in table motion B	0.008～0.016
Attitude accuracy	–
Straightness	–
Backlash	0.005

Points

Light weight, low profile and compact clean table

1 Positioning table of a structure with enhanced sealing property inside the table, based on light weight, low profile and compact Precision Positioning Table TE. Thanks to optimal design of linear motion rolling guide and ball screws, low cross sectional height as low as 50mm for TC50EB, 54mm for TC60EB and 67mm for TC86EB is realized. Since the sensor is designed to be directly mounted into the mounting groove, it contributes to space saving.

High corrosion resistance

3 Anodized high-tension aluminum alloy and stainless steel (stainless sheet) are used in main components to ensure excellent corrosion resistance.

Compatible with cleanliness class 3 Page Ⅱ-173

2 Press the stainless sheet against the side cover using the resin roller within the slide table, securely absorb it with a strong magnet sheet and seal the drive parts and slide table guiding parts. Dust-generation in proximity is prevented by sucking air from an enclosed space and class 3 cleanliness rating based on IKO measurement method is realized. Low dust-generation grease CGL for clean environment is contained in slide table guiding parts and ball screws to suppress dust-generation.

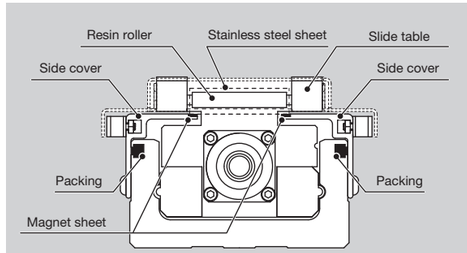

Sealed structure

Variation

Shape	Model	Bed width（mm）		
		50	60	86
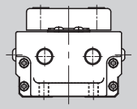	TC···EB	☆	☆	☆

1N=0.102kgf=0.2248lbs.
1mm=0.03937inch

About measurement of cleanliness

Cleanliness refers to classified air cleanliness levels based on size (particle diameter) and quantity of suspended particulates per unit volume.
IKO measures cleanliness by following the procedures.

● Measuring condition

Item	Content
Measuring equipment	Particle counter
Air flow velocity of measurement part	2.5m/s
Measured air quantity	28.3L （1cf）
Measurement time	48h（10min/measurement, 1measurement/h）

● Appearance of test device

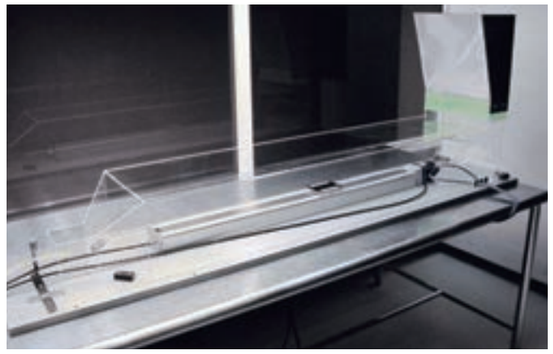

● Outline of test device

【Measurement environment】
Clean bench in cleanroom
（clean air withdrawing in acrylic cover）

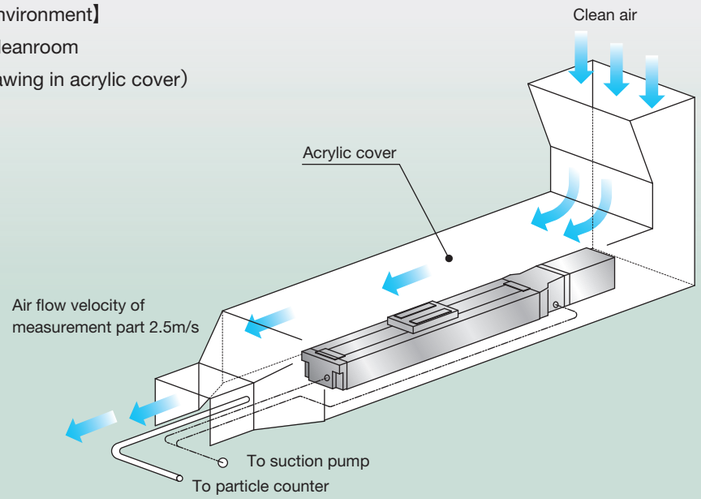

● Upper concentration limit of each cleanliness class (JIS B 9920 : 2002, ISO 14644-1: 1999)

unit: number of particles/m^3

Cleanliness	Particle diameter			
	0.1μm or larger	0.2μm or larger	0.3μm or larger	0.4μm or larger
Class 1	10	2	—	—
Class 2	100	24	10	4
Class 3 (Federal Standard 209D Class 1)	1 000	237	102	35
Class 4 (Federal Standard 209D Class 10)	10 000	2 370	1 020	352
Class 5 (Federal Standard 209D Class 100)	100 000	23 700	10 200	3 520
Class 6 (Federal Standard 209D Class 1000)	1 000 000	237 000	102 000	35 200

Actual measurement data of cleanliness

● Example of measurement data [Upper concentration limit chart for each cleanliness class]

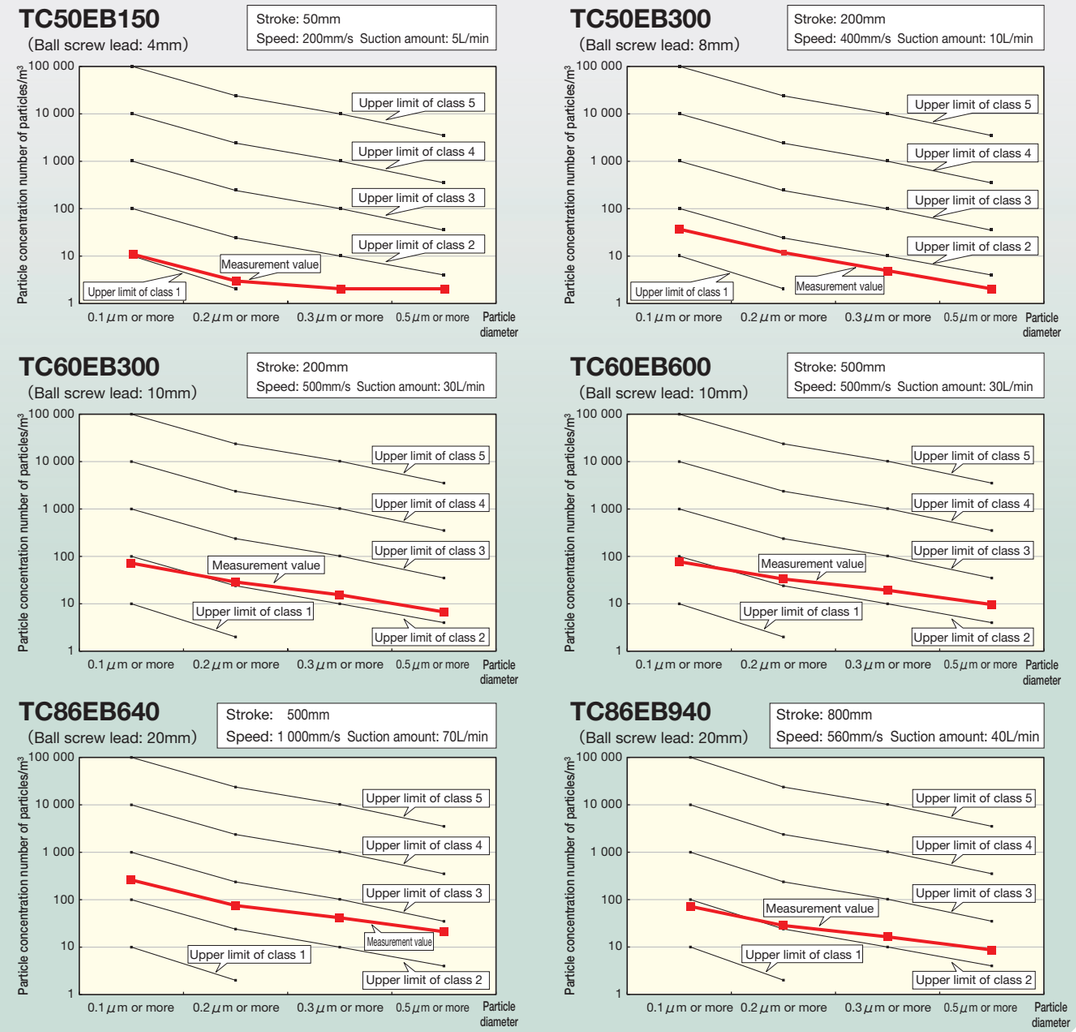

● Measurement result of cleanliness

Model and size	Bed length	Ball screw lead mm	Stroke length mm	Speed mm/s	Suction amount L/min	Cleanliness class (JIS B 9920:2002, ISO 14644-1: 1999)
TC50EB	150	4	50	200	5	Class 2
	200	4	100	200	10	Class 2
	300	8	200	400	10	Class 2
TC60EB	150	5	50	250	30	Class 3
	300	10	200	500	30	Class 3
	600	10	500	500	30	Class 3
TC86EB	340	10	200	500	30	Class 3
	640	10	500	500	40	Class 3
	640	20	500	1 000	70	Class 3
	940	20	800	560	40	Class 3

Remark: Cleanliness varies depending on operating environment and operating conditions.

1N=0.102kgf=0.2248lbs.
1mm=0.03937inch

Identification Number

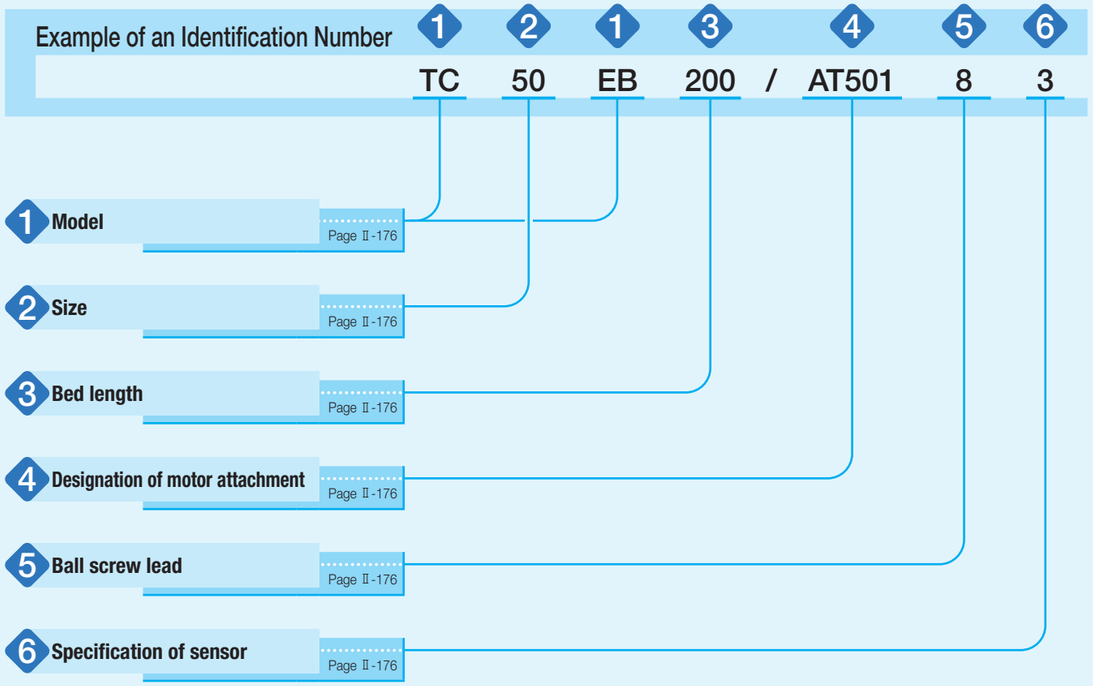

Identification Number and Specification

1 Model

TC···EB: Cleanroom Precision Positioning Table TC

2 Size

Size indicates bed width.
Select a size from the list of Table 1.

3 Bed length

Select a bed length from the list of Table 1.

Table 1 Sizes, bed widths, and bed lengths

unit: mm

Model and size	Bed width	Bed length (stroke length)						
TC50EB	50	150(50)	200(100)	250(150)	300(200)	–	–	–
TC60EB	60	150(50)	200(100)	300(200)	400(300)	500(400)	600(500)	–
TC86EB	86	340(200)	440(300)	540(400)	640(500)	740(600)	840(700)	940(800)

4 Designation of motor attachment

AT500: Without motor attachment
To specify the motor attachment, select it from the list of Table 2.

- Motor should be prepared by customer.
- Please specify motor attachment applicable to motor for use.
- If motor attachment is specified, a coupling shown in Table 3 is mounted on the main body before shipment. However, the final position adjustment should be made by customer since it is only temporarily fixed.
- For a product without motor attachment (AT500), no coupling is attached.

5 Ball screw lead

4: Lead 4mm (applied to TC50EB)
5: Lead 5mm (applied to TC60EB)
8: Lead 8mm (applied to TC50EB)
10: Lead 10mm (applied to TC60EB and TC86EB)
20: Lead 20mm (applied to TC86EB)

6 Specification of sensor

0: Without sensor
2: Two units of sensor mounted (limit)
3: Three units of sensor mounted (limit, pre-origin)
4: Four units of sensor mounted (limit, pre-origin, origin)
5: Two sensors attached (limit)
6: Three sensors attached (limit and pre-origin)
7: Four sensors attached (limit, pre-origin, origin)

If sensor mounting (symbol 2, 3, or 4) is specified, the sensor is mounted into the mounting groove on the side cover, and two detecting plates are attached onto the slide table.
If sensor attachment (symbol 5, 6, or 7) is specified, mounting screws and nuts for sensor are provided in addition to the specified number of sensors, and two detecting plates are attached onto the slide table.

1N=0.102kgf=0.2248lbs.
1mm=0.03937inch

Table 2 Application of motor attachment

Models of motor to be used					Flange size	Motor attachment		
Type	Manufacturer	Series	Model	Rated output W		TC50EB	TC60EB	TC86EB
AC servo motor	YASKAWA ELECTRIC CORPORATION	Σ-V	SGMJV-A5A	50	□40	AT501	AT502	–
			SGMAV-A5A			AT501	AT502	–
			SGMJV-01A	100		–	AT502	–
			SGMAV-01A			–	AT502	–
			SGMJV-02A	200	□60	–	–	AT503
			SGMAV-02A			–	–	AT503
	Mitsubishi Electric Corporation	J4	HG-MR053	50	□40	AT501	AT502	–
			HG-KR053			AT501	AT502	–
			HG-MR13	100		–	AT502	–
			HG-KR13			–	AT502	–
			HG-MR23	200	□60	–	–	AT503
			HG-KR23			–	–	AT503
	Panasonic Corporation	MINAS A5	MSMD5A	50	□38	AT504	AT505	–
			MSME5A			AT504	AT505	–
			MSMD01	100		–	AT505	–
			MSME01			–	AT505	–
			MSMD02	200	□60	–	–	AT506
			MSME02			–	–	AT506
	Hitachi Industrial Equipment Systems Co., Ltd	AD	ADMA-R5L	50	□40	AT501	AT502	–
			ADMA-01L	100		–	AT502	–
			ADMA-02L	200	□60	–	–	AT503
Stepper motor	ORIENTAL MOTOR Co., Ltd.	α step	ARM46		□42	AT507	–	–
			ARM66		□60	–	–	AT508
			ARM69		□60	–	–	AT508
		CRK	CRK54		□42	AT509	–	–
			CRK56 (1)		□60	–	AT510	AT511

Note (1) Applicable to the outer diameter ϕ8 of motor output shaft.
Remark: For detailed motor specifications, please see respective motor manufacturer's catalog.

Table 3 Coupling models

Motor attachment	Coupling models	Manufacturer	Coupling inertia J_C $\times 10^{-5}$kg · m^2
AT501	XGS-19C-5× 8	Nabeya Bi-tech Kaisha	0.062
AT502	XGS-19C-5× 8	Nabeya Bi-tech Kaisha	0.062
AT503	XGS-30C-8×14	Nabeya Bi-tech Kaisha	0.55
AT504	XGS-19C-5× 8	Nabeya Bi-tech Kaisha	0.062
AT505	XGS-19C-5× 8	Nabeya Bi-tech Kaisha	0.062
AT506	XGS-30C-8×11	Nabeya Bi-tech Kaisha	0.55
AT507	XGS-19C-5× 6	Nabeya Bi-tech Kaisha	0.062
AT508	XGS-30C-8×10	Nabeya Bi-tech Kaisha	0.55
AT509	XGS-19C-5× 5	Nabeya Bi-tech Kaisha	0.062
AT510	XGS-19C-5× 8	Nabeya Bi-tech Kaisha	0.062
AT511	XGS-30C-8× 8	Nabeya Bi-tech Kaisha	0.55

Remark: For detailed coupling specifications, please see respective manufacturer's catalog.

Specifications

Table 4 Accuracy

unit: mm

Model and size	Bed length	Positioning repeatability	Positioning accuracy	Parallelism in table motion B	Backlash
TC50EB	150	±0.002	0.035	0.008	0.005
	200				
	250		0.040		
	300				
TC60EB	150	±0.002	0.035	0.008	0.005
	200				
	300		0.040		
	400		0.045		
	500			0.010	
	600		0.050		
TC86EB	340	±0.002	0.040	0.008	0.005
	440		0.045	0.010	
	540		0.050		
	640			0.012	
	740		0.055		
	840		0.065	0.014	
	940			0.016	

Table 5 Maximum carrying mass

Model and size	Ball screw lead mm	Maximum carrying mass kg	
		Horizontal	Vertical
TC50EB	4	12	11
	8	12	7
TC60EB	5	17	13
	10	17	8
TC86EB	10	36	18
	20	29	10

Table 6 Allowable moment

Model and size	Allowable moment N · m
TC50EB	5.0
TC60EB	6.0
TC86EB	10.0

Remark: Applied in all directions.

■ Allowable moment

Allowable moment refers to the maximum static moment that can be used without affecting functions or performance. Therefore, do not exceed the allowable moment value during operation.

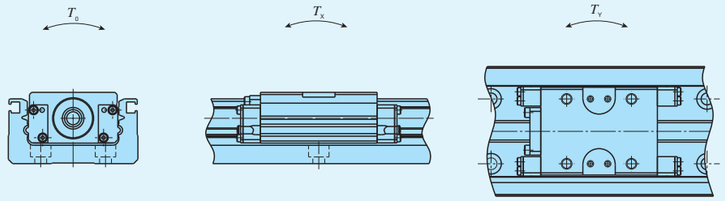

Table 7 Load rating of linear motion rolling guide

Model and size	Basic dynamic load rating C N	Basic static load rating C_0 N	Static moment rating N·m		
			T_0	T_X	T_Y
TC50EB	8 490	12 500	211	99.5	99.5
TC60EB	12 400	17 100	354	151	151
TC86EB	26 800	35 900	1 110	472	472

1N=0.102kgf=0.2248lbs.
1mm=0.03937inch

Table 8 Maximum speed

Motor type	Model and size	Bed length mm	Maximum speed mm/s				
			Lead 4mm	Lead 5mm	Lead 8mm	Lead 10mm	Lead 20mm
AC servo motor	TC50EB	–	200	–	400	–	–
	TC60EB	–	–	250	–	500	–
	TC86EB	640 or less	–	–	–	500	1 000
		740	–	–	–	500	1 000
		840	–	–	–	400	800
		940	–	–	–	330	660
Stepper motor	TC50EB	–	120	–	240	–	–
	TC60EB	–	–	150	–	300	–
	TC86EB	840 or less	–	–	–	300	600
		940	–	–	–	300	600

Remark: To measure the practical maximum speed, it is required to consider operation patterns based on the motor to be used and load conditions.

Table 9.1 Specifications of ball screw 1

Model and size	Lead mm	Shaft dia. mm	Basic dynamic load rating C N	Basic static load rating C_0 N
TC50EB	4	8	2 290	3 575
	8		1 450	2 155
TC60EB	5	10	2 730	4 410
	10		1 720	2 745
TC86EB	10	12	3 820	6 480
	20		2 300	3 920

Table 9.2 Specifications of ball screw 2

unit: mm

Model and size	Bed length	Shaft dia.	Overall length
TC50EB	150	8	192.5
	200		242.5
	250		292.5
	300		342.5
TC60EB	150	10	194
	200		244
	300		344
	400		444
	500		544
	600		644
TC86EB	340	12	395
	440		495
	540		595
	640		695
	740		795
	840		895
	940		995

Table 10 Moment of inertia of sectional area of bed

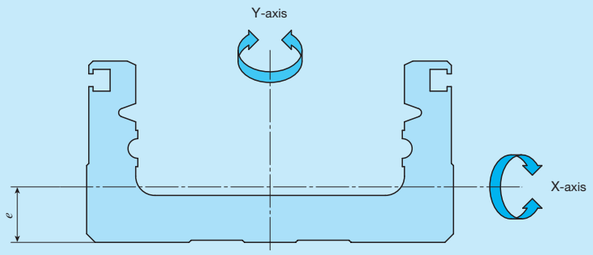

Model and size	Moment of inertia of sectional area mm⁴		Center of gravity e mm
	I_X	I_Y	
TC50EB	1.3×10^4	1.2×10^5	6.4
TC60EB	4.7×10^4	3.2×10^5	8.8
TC86EB	2.0×10^5	1.3×10^6	13.0

Table 11 Table inertia and starting torque

Model and size	Bed length mm	Table inertia J_T $\times10^{-5}$kg·m²					Starting torque T_S N·m				
		Lead 4mm	Lead 5mm	Lead 8mm	Lead 10mm	Lead 20mm	Lead 4mm	Lead 5mm	Lead 8mm	Lead 10mm	Lead 20mm
TC50EB	150	0.062	–	0.092	–	–	0.03	–	0.03	–	–
	200	0.074	–	0.104	–	–					
	250	0.090	–	0.120	–	–					
	300	0.102	–	0.132	–	–					
TC60EB	150	–	0.14	–	0.21	–	–	0.03	–	0.04	–
	200	–	0.20	–	0.27	–					
	300	–	0.27	–	0.34	–					
	400	–	0.34	–	0.41	–					
	500	–	0.41	–	0.48	–					
	600	–	0.49	–	0.55	–					
TC86EB	340	–	–	–	0.78	1.36	–	–	–	0.06	0.10
	440	–	–	–	0.93	1.51					
	540	–	–	–	1.08	1.66					
	640	–	–	–	1.23	1.81					
	740	–	–	–	1.38	1.96					
	840	–	–	–	1.53	2.11					
	940	–	–	–	1.68	2.26					

Mounting

For the processing accuracy of the Precision Positioning Table mounting surface and the tightening torque of the fixing screws, see page Ⅲ-29.

Sensor Specification

Table 12 Sensor timing chart

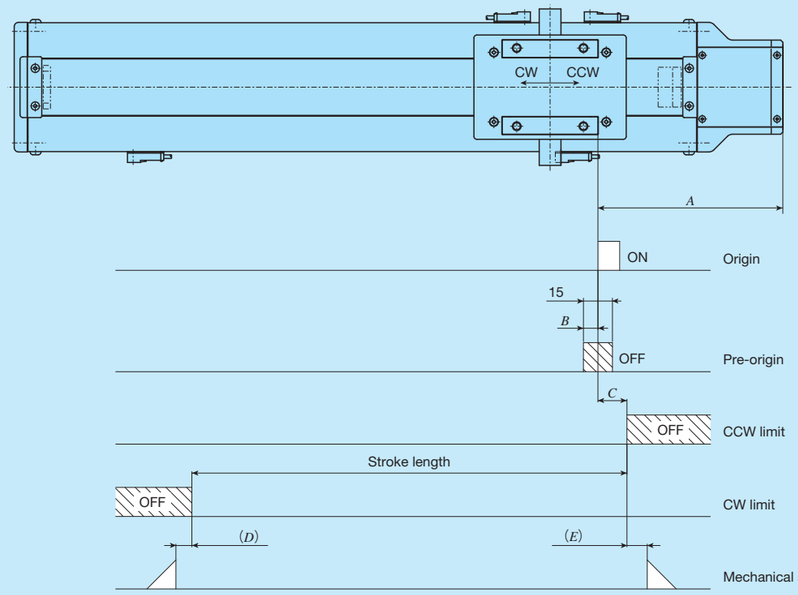

unit: mm

Model and size	Ball screw lead	A	B	C	D	E
TC50EB	4	104	3	20	7	7
	8		5			
TC60EB	5	104	3	20	7.5	8
	10		5			
TC86EB	10	127.5	5	20	11	14
	20		10			

Remarks 1. Mounting a sensor is specified using the corresponding identification number.
2. For the specifications of respective sensors, please see the section of sensor specification in General Explanation.

1N=0.102kgf=0.2248lbs.
1mm=0.03937inch

Dimensions of Motor Attachment

TC50EB

AT500 (without attachment)

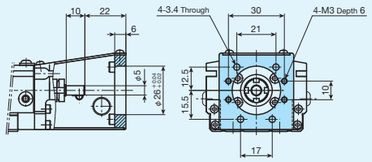

AT501

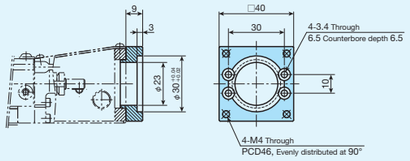

AT504

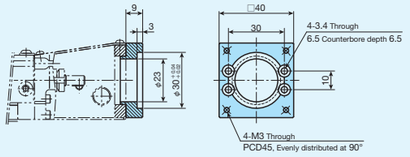

AT507
AT509

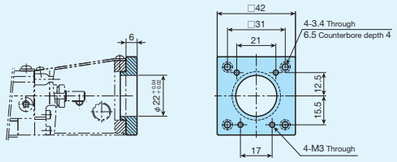

TC60EB

AT500 (without attachment)

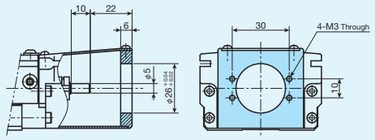

AT502

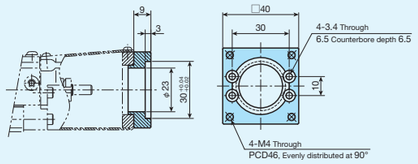

AT505

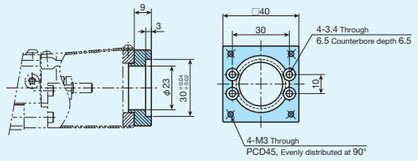

AT510

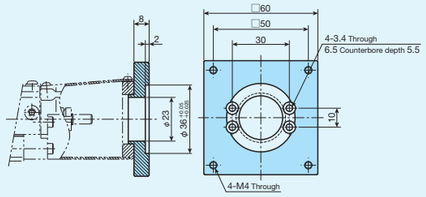

TC86EB

AT500 (without attachment)

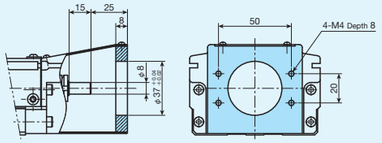

AT503

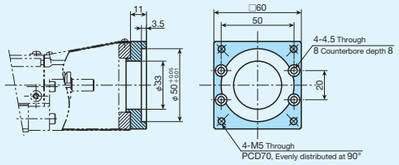

AT506

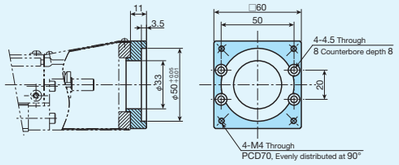

AT508
AT511

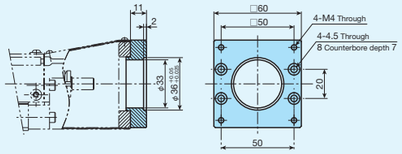

IKO Cleanroom Precision Positioning Table TC

TC50EB

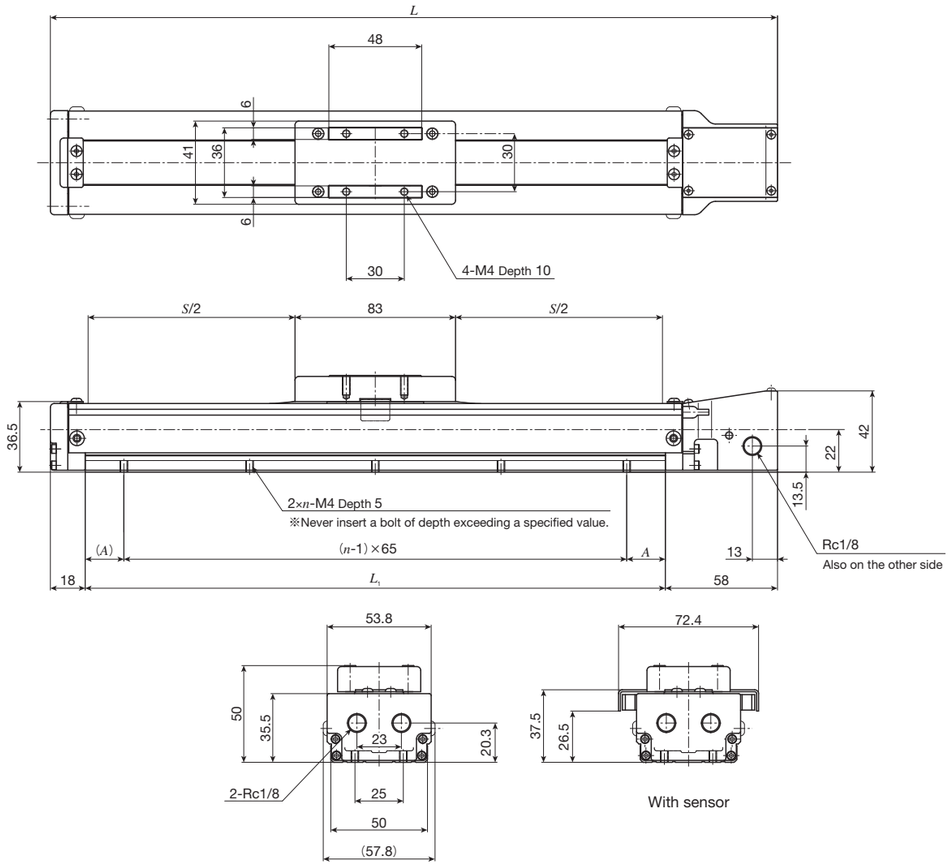

unit: mm

Bed length L_1	Overall length L	Stroke length S	Mounting holes of bed A	Mounting holes of bed n	Mass (Ref.) kg
150	226	50	10	3	0.9
200	276	100	35	3	1.0
250	326	150	27.5	4	1.1
300	376	200	20	5	1.2

1N=0.102kgf=0.2248lbs.
1mm=0.03937inch

IKO Cleanroom Precision Positioning Table TC

TC60EB

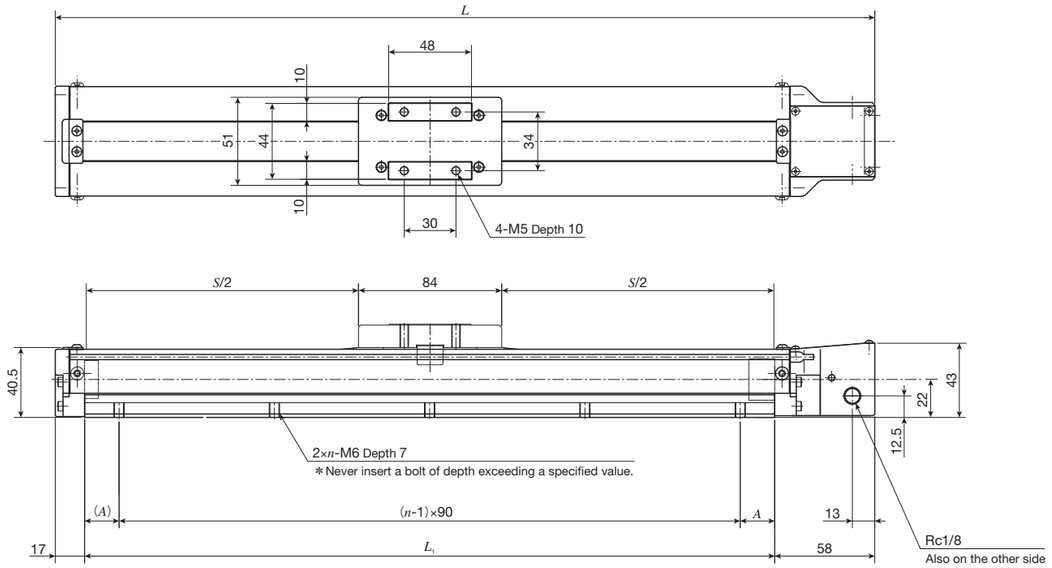

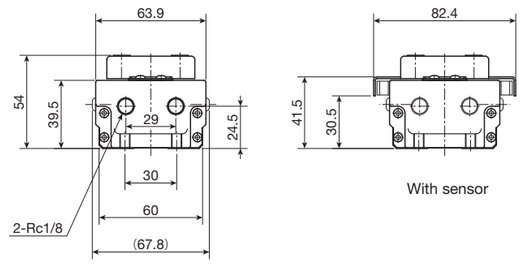

With sensor

unit: mm

Bed length L_1	Overall length L	Stroke length S	Mounting holes of bed A	Mounting holes of bed n	Mass (Ref.) kg
150	225	50	30	2	1.1
200	275	100	10	3	1.3
300	375	200	15	4	1.7
400	475	300	20	5	2.0
500	575	400	25	6	2.4
600	675	500	30	7	2.7

Remark: Motor attachment for stepper motor is 8mm lower than the bottom of the bed.

TC86EB

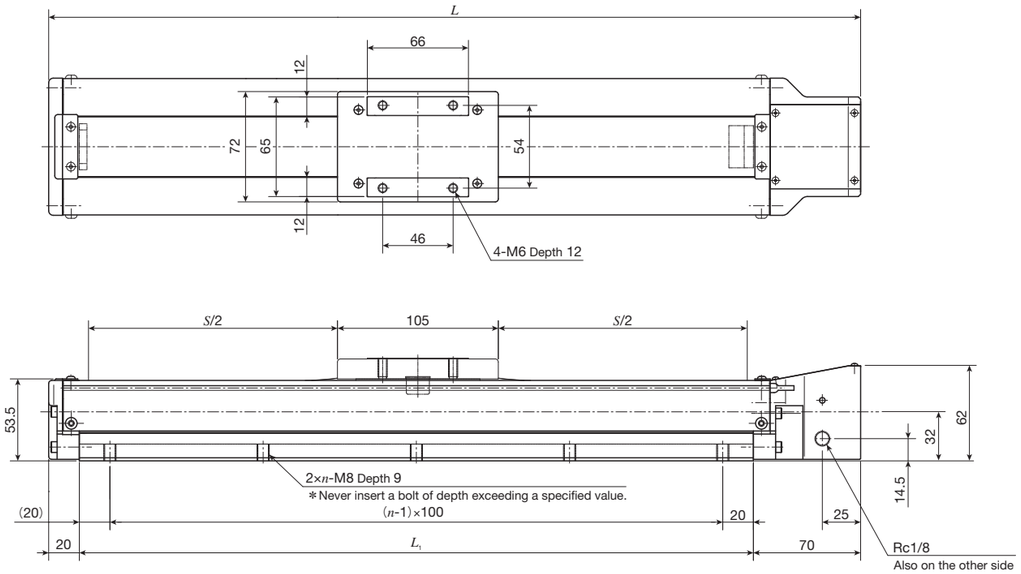

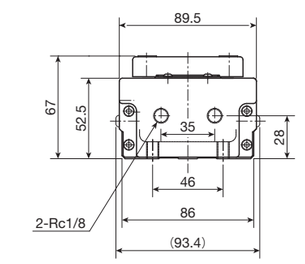

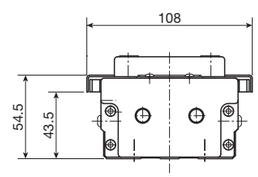

With sensor

unit: mm

Bed length L_1	Overall length L	Stroke length S	Mounting holes of bed n	Mass (Ref.) kg
340	430	200	4	3.6
440	530	300	5	4.2
540	630	400	6	4.8
640	730	500	7	5.4
740	830	600	8	6.0
840	930	700	9	6.6
940	1 030	800	10	7.3

1N=0.102kgf=0.2248lbs.
1mm=0.03937inch

TM

TM

Ball screw

Linear

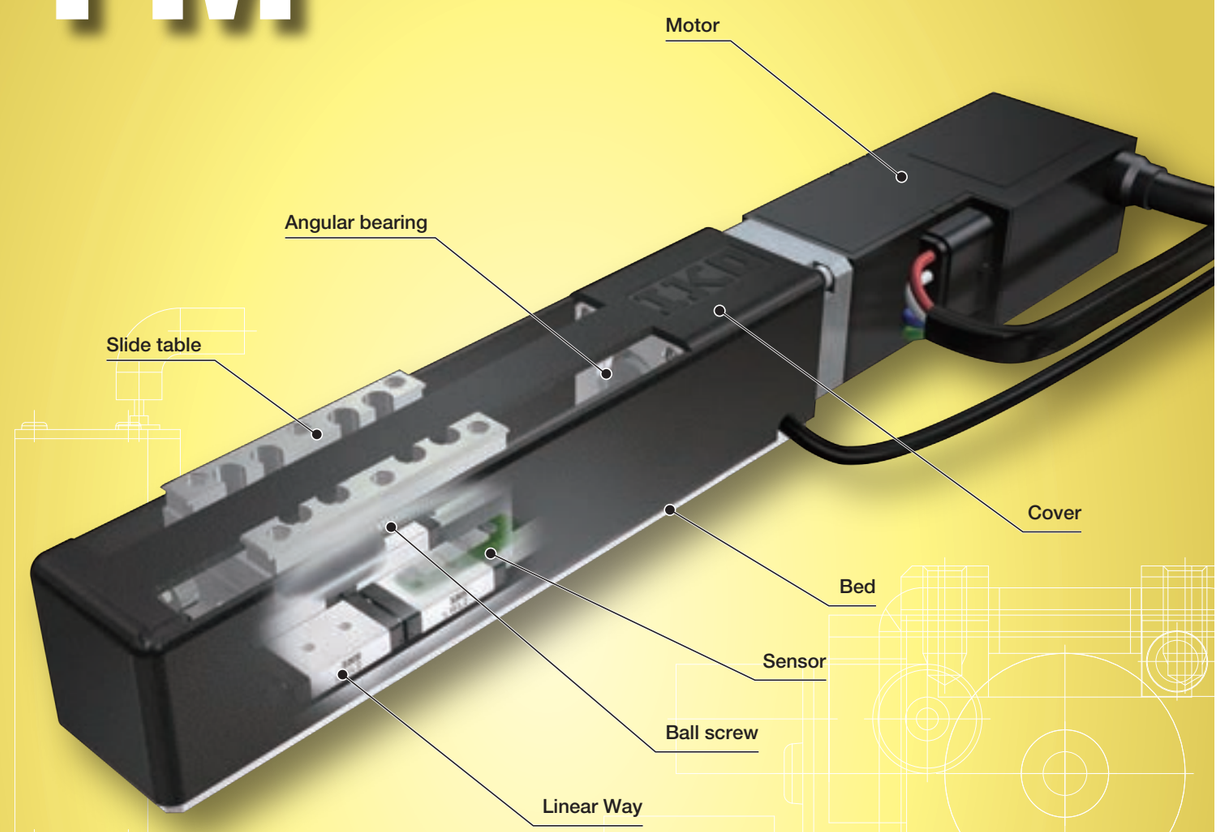

Major product specifications

Driving method	Precision ball screw
Linear motion rolling guide	Linear Way（ball type）
Built-in lubrication part	No built-in
Material of table and bed	Stainless steel
Sensor	Select by identification number

Accuracy

unit: mm

Positioning repeatability	±0.001～0.002
Positioning accuracy	0.015
Lost motion	–
Parallelism in table motion A	–
Parallelism in table motion B	–
Attitude accuracy	–
Straightness	–
Backlash	–

Points

● Ground ball screw drive realizes ultra-small positioning table with sectional height of 20mm and width of 17mm.

1 Incorporating a Micro Linear Way L of 2mm in rail width in the table guiding parts and a miniature ball screw of 2mm in diameter in the feeding mechanism, this is an unparalleled ultra-small size positioning table with ground ball screw drive type.

● Maximum table speed of 75mm/s is exerted.

2 Combination of high-lead ball screws and high-torque AC servomotors enables the table to move at high speed without reducing the accuracy.

● Table specification is selectable according to your use.

3 There are two types in the shape of slide table: standard table and long table. As two Micro Linear Way L with two slide units are incorporated in parallel into the long table, the table is structurally resistant to moment and complex load. The motor can be selected from two types of AC servomotor (standard type or high torque type) and stepper motor according to your use.

● Super small sensor can also be optionally built in.

4 Built-in origin, pre-origin, CW limit and CCW limit sensors can be indicated without modifying the outside dimensions.

☑ Widely applicable in such fields as below!

Featuring the ultra-small size yet super precision positioning capability, this table is best suited to enhancing the accuracy of the positioning mechanism of super small device. And, use of stainless steel in steel parts allows the table to be used even in a location where use of oil and grease should be preferably avoided and under the environment that tends to suffer from water scattering.

Best suited for positioning mechanism of super small device!

- Measuring equipment
- Electronic parts assembling machine
- Watch assembling machine
- Bio-related equipment
- Medical equipment
- Robot
- Winder etc....



☑ This table can respond to various requests!

We can prepare tables of various specifications such as switching table specification, lead screw specification, and stainless steel cover specification, in order to meet customer needs. For more information, please contact IKO.

Example of special specification: Switching table specification

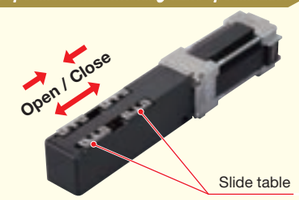

Variation

Shape		Model and size	Stroke length（mm）					
			10	20	30	40	50	60
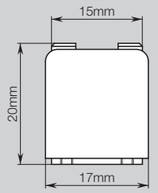	Standard table 	TM15	–	☆	–	☆	–	☆
	Long table 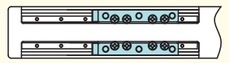	TM15G	☆	–	☆	–	☆	–

1N=0.102kgf=0.2248lbs.
1mm=0.03937inch

Identification Number

Example of an Identification Number

1	2	3	4	5	6	7	8
TM	15	G	- 50	A	/ Y061	05	1

1 **Model** Page Ⅱ-190

2 **Size** Page Ⅱ-190

3 **Shape of slide table** Page Ⅱ-190

4 **Effective stroke length** Page Ⅱ-190

5 **With motor type** Page Ⅱ-190

6 **Motor type** Page Ⅱ-190

7 **Ball screw lead** Page Ⅱ-190

8 **Specification of sensor** Page Ⅱ-190

Identification Number and Specification

1 Model

TM: Micro Precision Positioning Table TM

2 Size

15: Table width 15mm

3 Shape of slide table

No symbol: Standard table G: Long table

4 Effective stroke length

Select a effective stroke length from the list of Table 1.

Table 1 Shape of slide table and effective stroke length

Shape of slide table	Effective stroke length mm
Standard table	20、40、60
Long table	10、30、50

5 With motor type

A: With motor

6 Motor type

Y061: AC servomotor（standard type）
Y062: AC servomotor（high torque type）
V001: Stepper motor（five phases）

When Y062 is specified, ❼ Ball screw lead of 0.5mm cannot be specified.
For details of motor specification, see pages Ⅱ-195 and Ⅱ-197.
If you use a non-standard motor, please contact IKO.

7 Ball screw lead

05: Lead 0.5mm
10: Lead 1.0mm
15: Lead 1.5mm

When the ball screw lead of 0.5mm is specified, Y062: AC servomotor（high torque type）cannot be specified in ❻.

8 Specification of sensor

0: Without sensor
1: With sensor（on the right as viewed from the side opposite the motor）
2: With sensor（on the left as viewed from the side opposite the motor）

Once you select "Without sensor", adding a sensor afterward is not allowed.
Once you select "Without sensor", the motor wiring will be on the right as viewed from the side opposite the motor.
If "With sensor" is selected, the directions of wirings for the motor and the sensor are the same direction.

Remark: A resin table cover is used but a stainless table cover can also be manufactured. If needed, please contact IKO.

1N=0.102kgf=0.2248lbs.
1mm=0.03937inch

Specifications

Table 2 Accuracy

unit: mm

Model	Ball screw lead	Positioning repeatability	Positioning accuracy
TM15 -20	0.5	±0.001	0.015
	1	±0.002	
	1.5		
TM15 -40	0.5	±0.001	0.015
	1	±0.002	
	1.5		
TM15 -60	0.5	±0.001	0.015
	1	±0.002	
	1.5		
TM15G-10	0.5	±0.001	0.015
	1	±0.002	
	1.5		
TM15G-30	0.5	±0.001	0.015
	1	±0.002	
	1.5		
TM15G-50	0.5	±0.001	0.015
	1	±0.002	
	1.5		

Table 3 Maximum speed

Motor type	Number of revolutions of motor min^{-1}	Maximum speed mm/s		
		Lead 0.5mm	Lead 1mm	Lead 1.5mm
AC servo motor	3 000	25	50	75
Stepper motor	1 800	15	30	45

Remark: To measure the practical maximum speed, it is required to consider operation patterns based on the motor to be used and load conditions.

Table 4 Maximum carrying mass

Model and size	Ball screw lead mm	Maximum carrying mass kg	
		Horizontal	Vertical
TM15	0.5	0.7	0.5
	1.0	0.7	0.5
	1.5	0.7	0.5
TM15G	0.5	1.5	0.5
	1.0	1.5	0.5
	1.5	1.5	0.5

Table 5 Specifications of ball screw

unit: mm

Model and size	Shape of slide table	Stroke	Shaft dia.	Overall length
TM15	Standard	20	2	54
		40		74
		60		94
	Long	10		54
		30		74
		50		94

Table 6 Table inertia, coupling inertia, and starting torque

Model and size	Table inertia J_T $\times 10^{-5}$kg · m²			Coupling inertia J_C $\times 10^{-5}$kg · m²	Starting torque T_S N·m
	Lead 0.5mm	Lead 1mm	Lead 1.5mm		
TM15 -20	0.00013	0.00016	0.00022	0.0028	0.005
TM15 -40	0.00016	0.00019	0.00024		
TM15 -60	0.00018	0.00021	0.00026		
TM15G-10	0.00014	0.00019	0.00028		
TM15G-30	0.00016	0.00021	0.00030		
TM15G-50	0.00018	0.00023	0.00032		

Mounting

For the processing accuracy of the Precision Positioning Table mounting surface and the tightening torque of the fixing screws, see page Ⅲ-29.

Sensor Specification

Table 7 Sensor timing chart

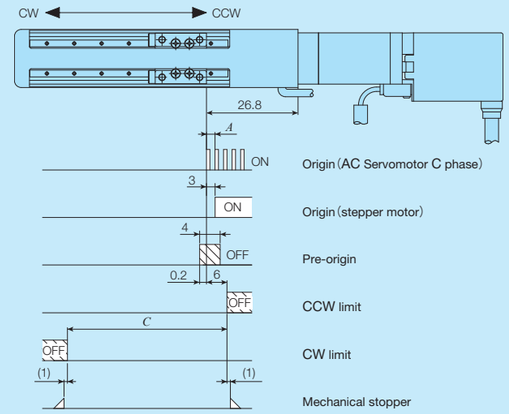

unit: mm

Model and size	Ball screw lead	A	Effective stroke length (1)	C (Ref.)
TM15 -20	0.5	0.5	20	Effective stroke length+2
	1	1		
	1.5	1.5		
TM15 -40	0.5	0.5	40	Effective stroke length+2
	1	1		
	1.5	1.5		
TM15 -60	0.5	0.5	60	Effective stroke length+2
	1	1		
	1.5	1.5		
TM15G-10	0.5	0.5	10	Effective stroke length+0.5
	1	1		
	1.5	1.5		
TM15G-30	0.5	0.5	30	Effective stroke length+0.5
	1	1		
	1.5	1.5		
TM15G-50	0.5	0.5	50	Effective stroke length+0.5
	1	1		
	1.5	1.5		

Note (1) The sensor position cannot be adjusted. The effective stroke length indicates the stroke length that can be surely secured between the limit sensors.

Remarks 1. "With sensor" or "Without sensor", and wiring directions are specified using the corresponding identification number.
2. For the specifications of respective sensors, please see the section of sensor specification in General Explanation.
3. The origin sensor is for stepper motor.

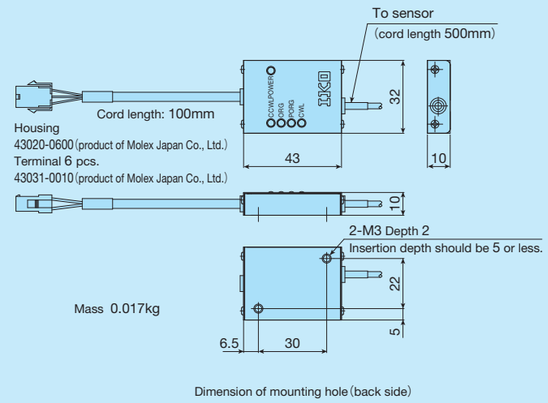

Fig.1 Outside dimension of sensor amplifier

1N=0.102kgf=0.2248lbs.
1mm=0.03937inch

System Configuration

A dedicated driver for Micro Precision Positioning Table TM is provided. Pages Ⅱ-193 and Ⅱ-194 show its typical system configuration. For the specifications of the driver, please see the section of specifications of motor and driver on pages Ⅱ-195 to Ⅱ-198. When you place an order, please specify desired identification numbers from the list of Tables 8 and 9.

Table 8 System Configuration for AC Servomotor (Y061, Y062)

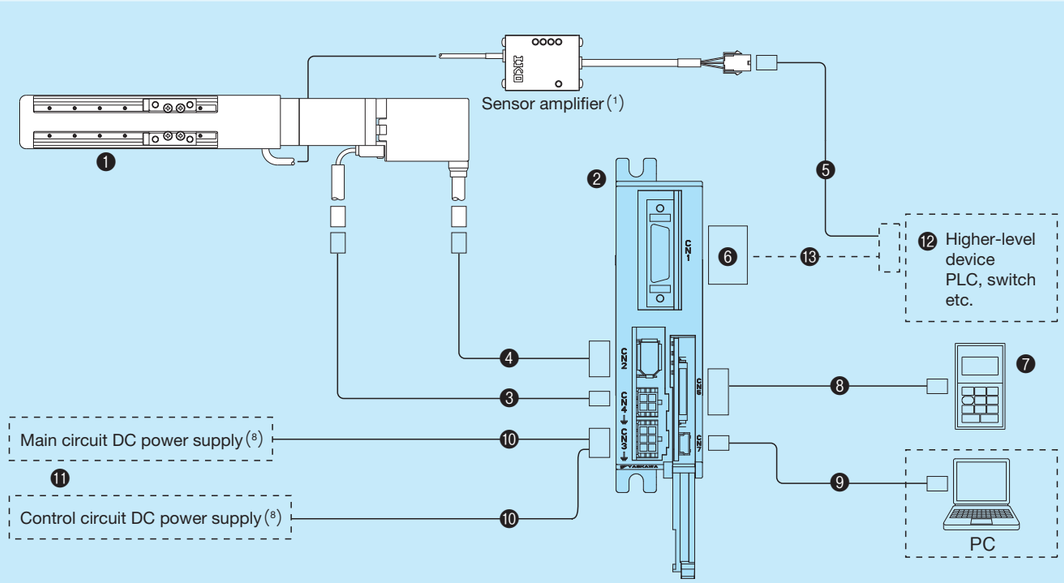

No.	Name	Identification number	
❶	Table body (motor code)	Y061 AC Servomotor (standard type)	Y062 AC Servomotor (high torque type)
❷	Driver (2)	SGDV-1R7EP1A	
❸	Motor cord (3m) (2) (3)	JZSP-CF1M20-03-E	
❹	Encoder cord (3m) (2) (3)	JZSP-CMP10-03-E	
❺	Sensor extension cord (3m) (2) (4)	TAE10W0-LC03	
❻	I/O connector	TAE20W1-CN (5)	
❼	Digital operator (2) (6)	JUSP-OP05A-1-E	
❽	Digital operator extension cable (2) (6)	JZSP-CF1S00-A3-E	
❾	PC connection cable (2) (6)	JZSP-CVS06-02-E	
❿	Power supply cable (2) (4) (7)	JZSP-CF1G00-□□-E	
⓫	Power supply (8)	This must be prepared by customer.	
⓬	Higher-level device		
⓭	I/O connector connection cable		

Notes (1) Once you select "Without sensor", a sensor amplifier will not be attached.
(2) Manufactured by Yaskawa Electric Corporation.
(3) For specific cord length, please contact IKO.
(4) The higher-level device side of the cord will be loose.
(5) I/O connector TAE20W1-CN is a combined product of 10126-3000PE (connector) and 10326-52F0-008 (cover) from 3M Japan Limited.
(6) A digital operator or ordinary PC is required for parameter setting.
(7) Specify the length 1 - 3m in 1m increments in □□ of the identification number. (Example for 3m: JZSP-CF1G00-03-E)
(8) The main circuit power supply supports DC48V as well as DC24V. The control circuit power supply is DC24V. Each power supply must be prepared separately by the customer.

Remarks 1: The motor cord, encoder cord and sensor extension cord have excellent bending resistance.
2: Initial setting of parameters is required for the driver for AC Servomotor.
When setting parameters with an ordinary PC, download the setting software from the Yaskawa Electric Corporation website.
(URL: http://www.e-mechatronics.com/download/tool/servo/sgmwinpls/download.html)

Table 9 System Configuration for stepper motor (V001)

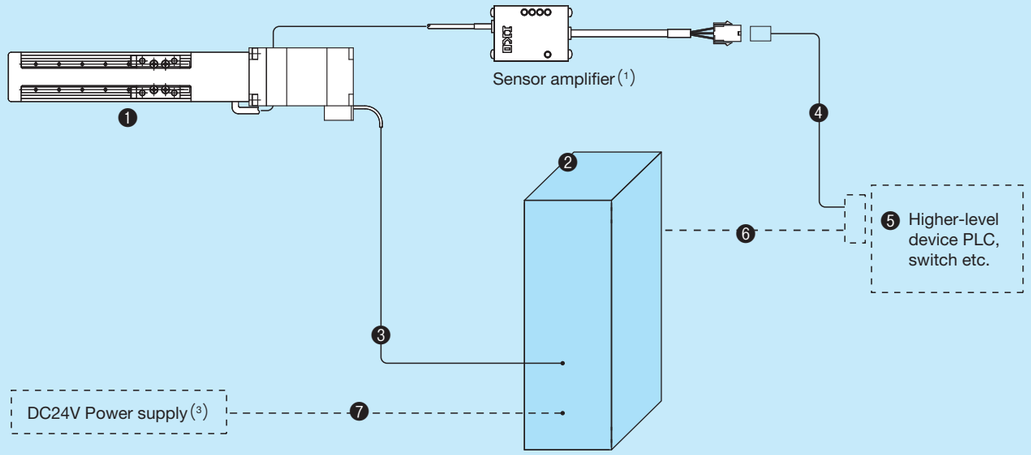

No.	Name	Identification number
❶	Table body (motor code)	Stepper motor (five phases)
❷	Driver (2)	CVD503-K
❸	Motor cord	TAE20R6-SM0□ (Fixed cable specification)
		TAE20R7-SN0□ (Bending-resistant cable specification)
❹	Sensor extension cord (4) (5)	TAE10W0-LC03
❺	Higher-level device	This must be prepared by customer.
❻	I/O connector connection cord	This must be prepared by customer. (6) (7)
❼	Power cord	This must be prepared by customer. (6) (7)

Notes (1) Once you select "Without sensor", a sensor amplifier will not be attached.
(2) Manufactured by Oriental Motor Co., Ltd.
(3) DC24V power supply must be prepared separately by the customer.
(4) For specific cord length, please contact IKO.
(5) The higher-level device side of the cord will be loose.
(6) Connectors are provided for the driver. Please see the section of specifications of motor and driver on page Ⅱ-197.
(7) Connect the cord directly.

Remark The motor cord length can be specified using the box (□) at the end of the identification number, up to 5m in increments of 1m.
(For 5m: TAE20R6-SM05)

1N=0.102kgf=0.2248lbs.
1mm=0.03937inch

Specifications of motor and driver

AC Servomotor manufactured by Yaskawa Electric Corporation (Y061, Y062)

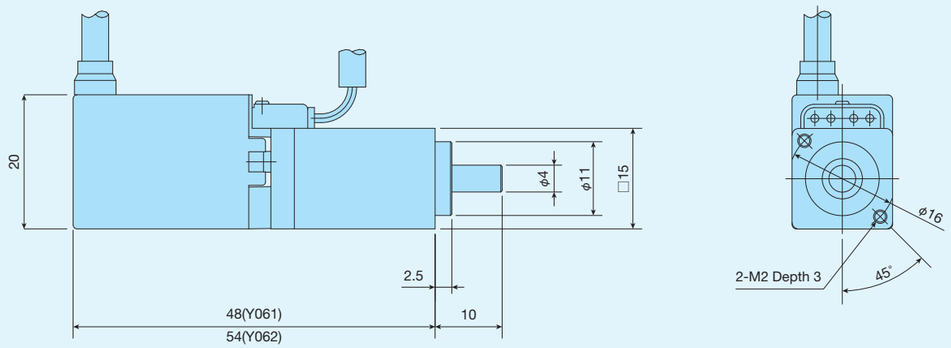

Table 10 Motor specifications

Motor type	Motor code	Motor identification number	Voltage specification	Rated output W	Rated torque N·m	Max. momentary torque N·m	Rated number of revolutions r /min	Motor inertia J_M $\times 10^{-4}$ kg·m^2	Encoder resolution pulse/rev	Mass kg
Standard	Y061	SGMMV-B3E2A21	DC24V DC48V	3.3	0.0105	0.0263	3 000	0.000441	131072 (17bit)	0.055
High torque	Y062	SGMMV-B5E2A21	DC24V DC48V	5.5	0.0175	0.0438	3 000	0.000796	131072 (17bit)	0.06

Remarks 1. The main circuit power supply supports DC48V as well as DC24V.
2. Motor torque starts to decrease when the number of revolutions of the motor exceeds 3,000 min^{-1}.

Table 11 Specifications of wirings for the motor and connector

Motor code Y061,Y062			Motor side	Mating side
Pin No.	Content	Wire color		
1	U phase	Red	Connector 43020-0401 Contact 43031-0001 Molex Japan Co., Ltd.	Connector 43025-0400 Contact 43030-0001 Molex Japan Co., Ltd.
2	V phase	White		
3	W phase	Blue		
4	FG	Green		

Table 12 Specifications of wirings for the encoder and connector

Motor code Y061,Y062			Motor side	Mating side
Pin No.	Content	Wire color		
1	PG 5V	Orange	Socket connector solder type 54280-0609 Molex Japan Co., Ltd.	Connector crimp type 55100-0670 Molex Japan Co., Ltd.
2	PG 0V	Light green		
3	BAT(+)	Red/pink		
4	BAT(-)	Black/pink		
5	PS	Red/sky blue		
6	/PS	Black/ sky blue		
Shell	FG	FG		

Table 13 Driver for AC Servomotor Y061/Y062, manufactured by Yaskawa Electric Corporation

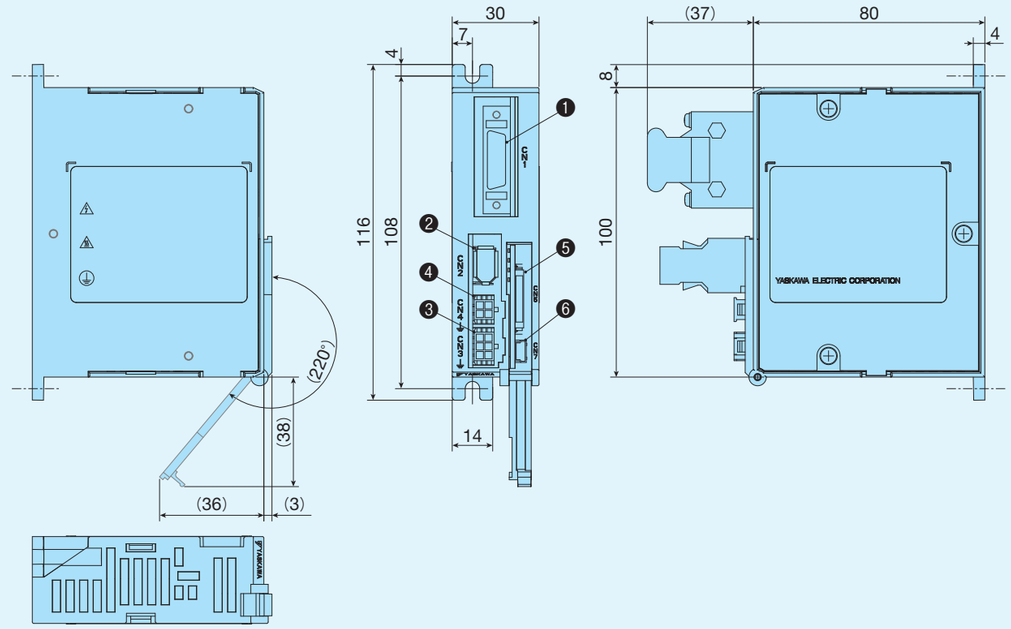

No.	Name		Function
❶	CN1	I/O connector	Connect a pulse cord to this connector.
❷	CN2	Encoder connector	Connect the encoder cord.
❸	CN3	Driving power supply connector	Connect to the driving power supply.
❹	CN4	Motor connector	Connect a motor cord to this connector.
❺	CN5	Connector for digital operator	Connect the digital operator extension cable.
❻	CN7	Connector for PC	Connect the PC connection cable.

Table 14 Driver specification

Identification number of driver	SGDV-1R7EP1A(1)	
Applicable motor code	Y061	Y062
Rated output of applicable motor	3.3W	5.5W
Feedback	Serial encoder 17bit	
Specified system of pulse input(1)	CW/CCW signal, pulse signal/rotational direction signal	
Specified method of pulse input(1)	Line driver, open collector	
Main circuit power supply voltage(2)	DC24V±15%, DC48V±15%	
Control circuit power supply	DC24V±15%	
Continuous output current Arms	1.7	
Maximum output current Arms	4.1	
Operating temperature range	0~55℃	
Storage temperature range	-20~85℃	
Operating humidity	90% RH or lower (keep freeze/condensation free)	
Mass kg	0.3	

Note (1) This driver is a pulse train command type. If the network communication command type or analog voltage command type is required, please contact IKO.
(2) The main circuit power supply supports DC48V and DC24V.

1N=0.102kgf=0.2248lbs.
1mm=0.03937inch

Stepper motor (V001) manufactured by Oriental Motor Co., Ltd.

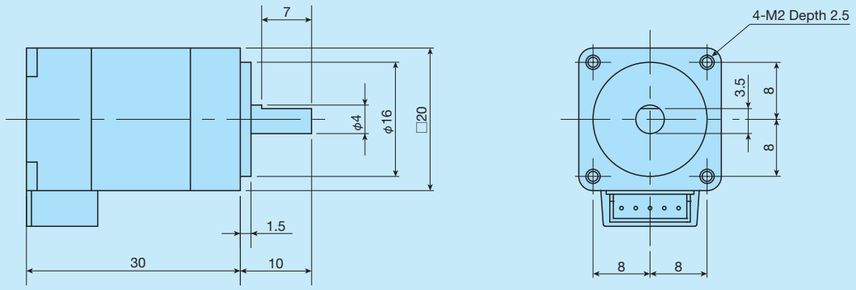

Table 15 Motor specifications

Motor code	Model number of motor	Step angle	Maximum holding torque N・m	Current A/phase	Rotor inertia J_M ×10^{-4}kg・m^2	Mass (Ref.) kg
V001	PK513PA	0.72	0.023	0.35	0.0016	0.05

Table 16 Specifications of wirings for the motor and connector

Pin No.	Color of lead wire	Motor side	Mating side(1)
1	Blue	Housing 51065-0500	Housing 51103-0500
2	Red		
3	Orange		
4	Green	Terminal 50212-8100	Terminal 50351-8100
5	Black		

Note (1) Mating-side connector must be prepared by customer.
Remark: Connectors are manufactured by Molex Japan Co., Ltd.

Table 17 Stepper motor driver manufactured by Oriental Motor Co., Ltd. (RoHS Compliant)

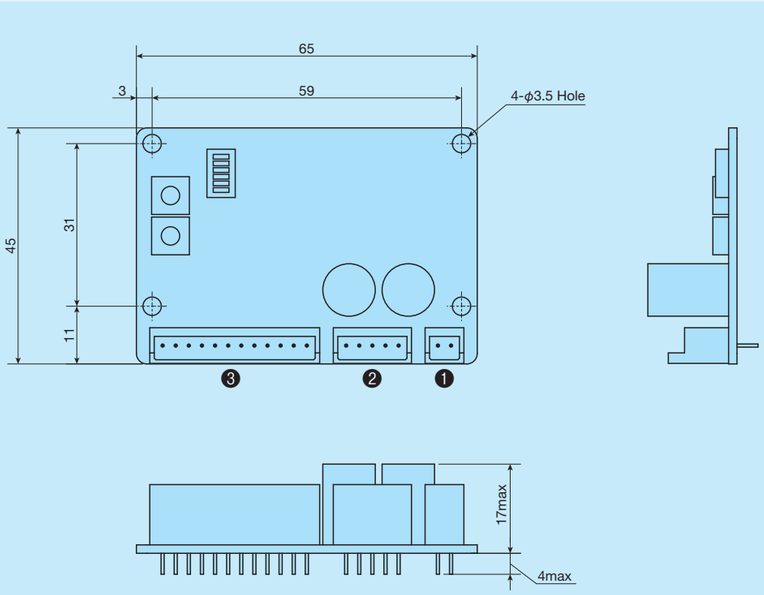

No.	Name		Function
❶	CN1	Power supply connector	Connect a power supply to this connector.
❷	CN2	Motor connector	Connect a motor cord to this connector.
❸	CN3	Input/output signal connector	Connect a pulse cord to this connector.

Table 18 Stepper motor driver specifications

Identification number of driver	CVD503-K
Applicable motor code	V001
Driving method	Micro step drive bi-polar constant current method
Driver current (default settings)	0.35A/phase
Power supply voltage	DC24V ±10%
Input current	0.6A
Maximum input pulse frequency	Higher-level controller line driver output: 1MHz (when duty is 50%) / Higher-level controller open collector output: 250kHz (when duty is 50%) negative logic pulse input
Ambient temperature (during operation)	0 to +50° C (keep freeze free)
Ambient humidity (during operation)	85% or lower (keep condensation free)
Atmosphere	Keep corrosive gas and dust free. Avoid direct contact with water, oil, etc.

Remark: DC24V is recommended for power supply voltage. The power supply must be prepared by customer.

Torque chart for stepper motor

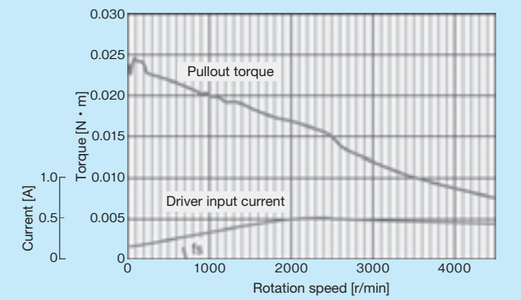

Motor code	Model number of motor	Model number of driver
V001	PK513PA	CVD503-K

Table 19 Stepper motor driver accessories

Name		Model number		Remark
		Housing	Contact	
CN1	Power supply connector	51103-0200	50351-8100	Molex Japan Co., Ltd.
CN2	Motor connector	51103-0500		
CN3	Input/output signal connector	51103-1200		

1N=0.102kgf=0.2248lbs.
1mm=0.03937inch

TM15 Specifications of AC servomotor

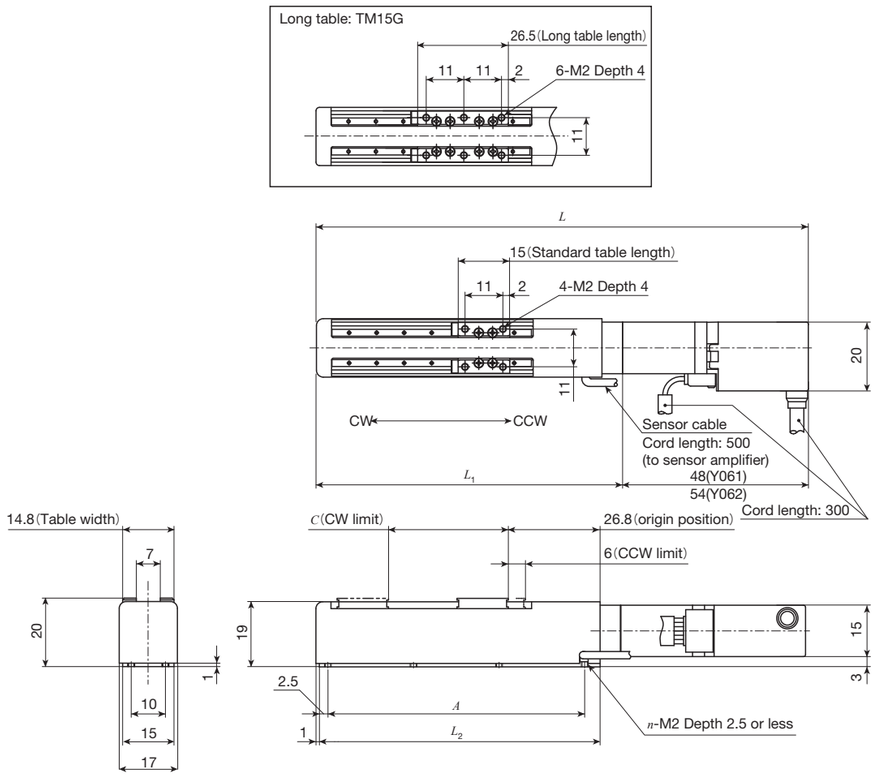

Unit: mm

Model and size	Stroke length		Dimensions of table						Mass(1) (Ref.) kg
	Effective stroke length(2)	CW limit position C	Overall length L		L_1	L_2	Mounting holes of bed A (Number of units x pitch)	n	
			Y061	Y062					
TM15 -20	20	16	117	123	69	62	50 (2×25)	6	0.15
TM15 -40	40	36	137	143	89	82	75 (3×25)	8	0.16
TM15 -60	60	56	157	163	109	102	96 (4×24)	10	0.17
TM15G-10	10	4.5	117	123	69	62	50 (2×25)	6	0.16
TM15G-30	30	24.5	137	143	89	82	75 (3×25)	8	0.17
TM15G-50	50	44.5	157	163	109	102	96 (4×24)	10	0.18

Note (1) Represents value when Y061 is specified. It will be 0.01 kg heavier when Y062 is specified.
(2) The sensor position cannot be adjusted. The effective stroke length indicates the stroke length that can be surely secured between the limit sensors.
Remark: A resin table cover is used but a stainless steel table cover can also be manufactured. If needed, please contact IKO.

TM15 Specifications of stepper motor

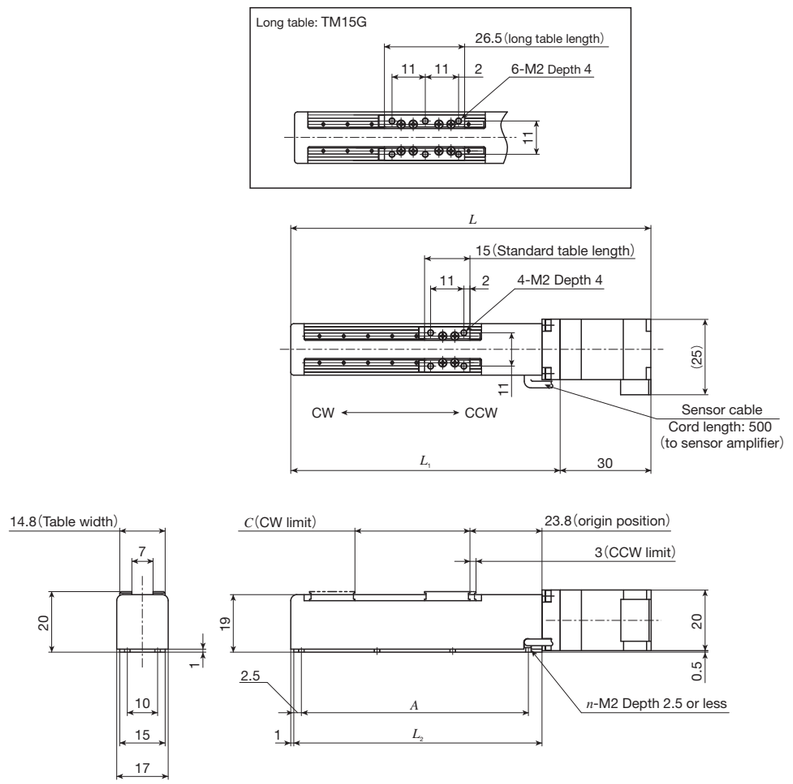

unit: mm

Model and size	Stroke length		Dimensions of table					Mass (Ref.) kg
	Effective stroke length(1)	CW limit position C	Overall length L	L_1	L_2	Mounting holes of bed A (the number of holes×pitch)	n	
TM15 -20	20	19	99	69	62	50 (2×25)	6	0.15
TM15 -40	40	39	119	89	82	75 (3×25)	8	0.16
TM15 -60	60	59	139	109	102	96 (4×24)	10	0.17
TM15G-10	10	7.5	99	69	62	50 (2×25)	6	0.16
TM15G-30	30	27.5	119	89	82	75 (3×25)	8	0.17
TM15G-50	50	47.5	139	109	102	96 (4×24)	10	0.18

Note (1) The sensor position cannot be adjusted. The effective stroke length indicates the stroke length that can be surely secured between the limit sensors.
Remark: A resin table cover is used but a stainless table cover can also be manufactured. If needed, please contact IKO.

1N=0.102kgf=0.2248lbs.
1mm=0.03937inch

TS / CT

TS

Ball screw
Linear

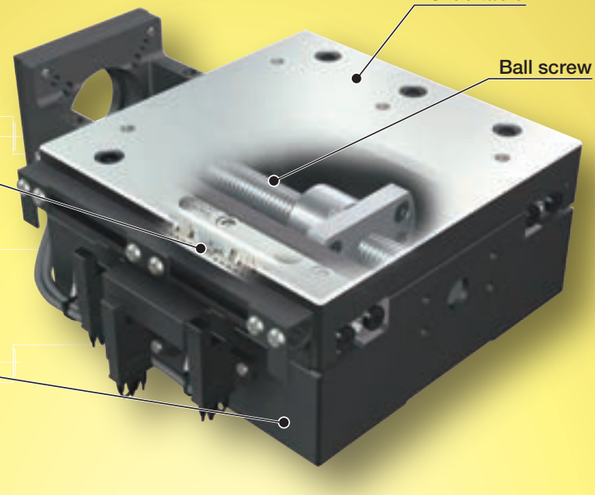

CT

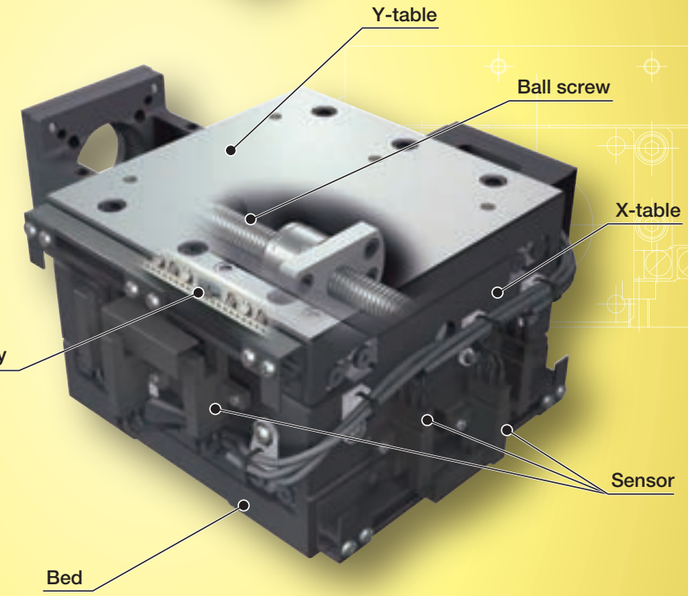

Major product specifications

Driving method	Precision ball screw
Linear motion rolling guide	Crossed Roller Way
Built-in lubrication part	No built-in
Material of table and bed	Cast iron
Sensor	Select by identification number

Accuracy

unit: mm

Positioning repeatability	±0.002
Positioning accuracy	0.005～0.015
Lost motion	–
Parallelism in table motion A	0.005～0.008
Parallelism in table motion B	0.015～0.020
Attitude accuracy	–
Straightness	–
Backlash	–

Points

● High precision and compact positioning table

1 High precision and compact positioning table incorporating Crossed Roller Way into high rigidity and vibration damping performance cast iron slide tables and beds.

● Safety design with retainer creep proof function

2 Adoption of Anti-Creep Cage Crossed Roller Way that does not cause retainer creep in the linear motion rolling guide allows you to safely use the table even in vertical axis use and high acceleration / deceleration operation. (TS55/55 and CT55/55 are not included.)

● Optimal for works directly conducted on the table upper surface

3 Adoption of large precisely polished table allows you to use the entire table upper surface as work space.

Structure and features of Anti-Creep Cage Crossed Roller Way

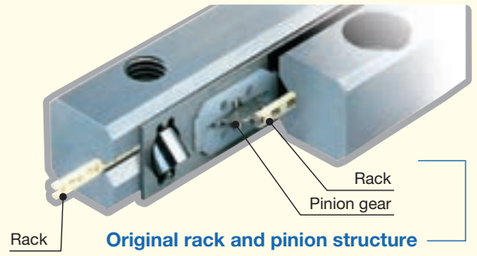

Original rack and pinion structure

No retainer creep even under high-tact operation in vertical axis !

《Durability test》 Test conditions

Model number	CRWG 3	
Test method	Vibration test machine	
Operating conditions	Posture	Vertical
	Maximum speed	827 mm/s
	Acceleration	15 G
	Cycle	31 Hz
	Stroke	8 mm
	Mass of moving table	330 g
Number of strokes	100 million strokes	

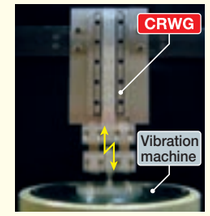

《Result》 No retainer creep nor material damage in any component is found.

Variation

Shape	Model	Table width (mm)	Table length (mm) 55	75	125	220	310	350
Single-axis specification 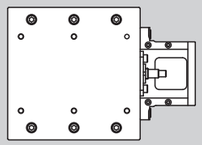	TS	55	☆	–	–	–	–	–
		75	–	☆	–	–	–	–
		125	–	–	☆	☆	–	–
		220	–	–	–	☆	☆	–
		260	–	–	–	–	–	☆
Two-axis specification 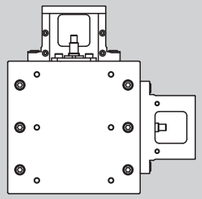	CT	55	☆	–	–	–	–	–
		75	–	☆	–	–	–	–
		125	–	–	☆	–	–	–
		220	–	–	–	☆	–	–
		260	–	–	–	–	–	☆
		350	–	–	–	–	–	☆

uses Anti-Creep Cage Crossed Roller Way.

1N=0.102kgf=0.2248lbs.
1mm=0.03937inch

Identification Number

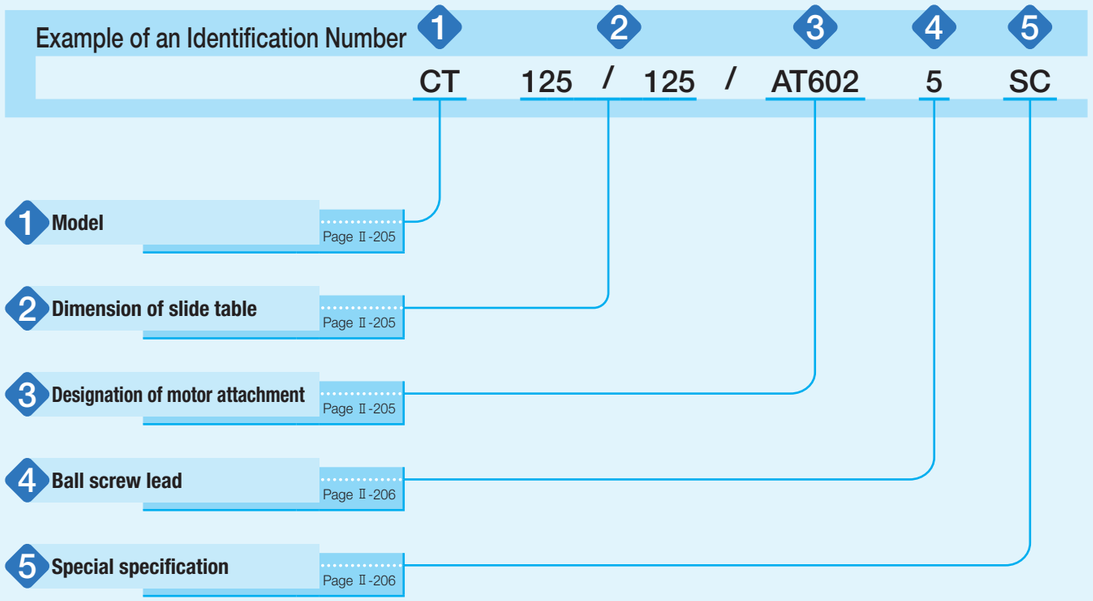

Identification Number and Specification

1 Model

TS : Precision Positioning Table TS (single-axis specification)
CT : Precision Positioning Table CT (two-axis specification)

2 Dimension of slide table

Select a dimension for slide table from the list of Table 1.

Width and length of slide table are indicated in mm. For CT (two-axis specification), width and length of Y-table are indicated.

Table 1 Models of linear motion rolling guide/slide table dimension and stroke length

unit: mm

Model	Linear motion rolling guide	Width/length	Stroke length
TS	Crossed Roller Way	55/ 55	15
	Anti-Creep Cage Crossed Roller Way	75/ 75	25
		125/125	50
		125/220	120
		220/220	120
		220/310	180
		260/350	250
CT	Crossed Roller Way	55/ 55	X-axis: 15, Y-axis: 15
	Anti-Creep Cage Crossed Roller Way	75/ 75	X-axis: 25, Y-axis: 25
		125/125	X-axis: 50, Y-axis: 50
		220/220	X-axis: 120, Y-axis: 120
		260/350	X-axis: 150, Y-axis: 250
		350/350	X-axis: 250, Y-axis: 250

3 Designation of motor attachment

As for a motor attachment, select it from the list of Table 2.

- Motor should be prepared by customer.
- Please specify motor attachment applicable to motor for use.
- A coupling shown in Table 3 is mounted on the main body before shipment. However, the final position adjustment should be made by customer since it is only temporarily fixed.

Table 2 Application of motor attachment

Motor to be used					Flange size mm	Motor attachment			
Type	Manufacturer	Series	Model	Rated output W		TS55/55 TS75/75 CT55/55 CT75/75	TS125/125 TS125/220 TS220/220 CT125/125 CT220/220	TS220/310	TS260/350 CT260/350 CT350/350
AC servomotor	YASKAWA ELECTRIC CORPORATION	Σ-V	SGMJV-01A	100	□40	–	AT602	AT604	–
			SGMAV-01A			–	AT602	AT604	–
			SGMJV-02A	200	□60	–	–	–	AT606
			SGMAV-02A			–	–	–	AT606
	Mitsubishi Electric Corporation	J4	HG-MR13	100	□40	–	AT602	AT604	–
			HG-KR13			–	AT602	AT604	–
			HG-MR23	200	□60	–	–	–	AT606
			HG-KR23			–	–	–	AT606
	Panasonic Corporation	MINAS A5	MSMD01	100	□38	–	AT603	AT605	–
			MSME01			–	AT603	AT605	–
			MSMD02	200	□60	–	–	–	AT607
			MSME02			–	–	–	AT607
	Hitachi Industrial Equipment Systems Co., Ltd	AD	ADMA-01L	100	□40	–	AT602	AT604	–
			ADMA-02L	200	□60	–	–	–	AT606
Stepper Motor	ORIENTAL MOTOR Co., Ltd.	PK	PK544-A		□38	AT601	–	–	–
		RKS・CRK	CRK56 (1)		□60	–	AT608	AT609	–
			RKS59		□85	–	–	–	AT610

Note (1) Applicable to the outer diameter ϕ8 of motor output shaft.
Remark: For detailed motor specifications, please see respective motor manufacturer's catalog.

Table 3 Coupling models

Motor attachment	Coupling models	Manufacturer	Coupling inertia J_c $\times 10^{-5}$kg・m^2
AT601	MWSS-12- 5× 5	Nabeya Bi-tech Kaisha	0.018
AT602	MSTS-25C- 8× 8	Nabeya Bi-tech Kaisha	0.71
AT603	MSTS-25C- 8× 8	Nabeya Bi-tech Kaisha	0.71
AT604	MSTS-25C- 6× 8	Nabeya Bi-tech Kaisha	0.71
AT605	MSTS-25C- 6× 8	Nabeya Bi-tech Kaisha	0.71
AT606	MSTS-32C-12×14	Nabeya Bi-tech Kaisha	2.7
AT607	MSTS-32C-11×12	Nabeya Bi-tech Kaisha	2.7
AT608	MSTS-19C- 6× 8	Nabeya Bi-tech Kaisha	0.277
AT609	MSTS-25C- 6× 8	Nabeya Bi-tech Kaisha	0.71
AT610	MSTS-32C-12×14	Nabeya Bi-tech Kaisha	2.7

Remark: For detailed coupling specifications, please see respective manufacturer's catalogs.

4 Ball screw lead

1: Lead 1mm (applicable to 55/55, 75/75, and 125/125)
2: Lead 2mm (not applicable to 55/55 or 75/75)
5: Lead 5mm (not applicable to 55/55 or 75/75)

5 Special specification

No symbol: Standard specification
BE : Option base (applicable to 55/55)
LR : Black chrome surface treatment
SC : Table with sensor

Option base : Base plate is available for attaching the main body downward. For detailed information, please see the dimension table.
Black chrome surface treatment : A black permeable film is formed on the surface to improve corrosion resistance. This treatment is performed on the surfaces of slide table, bed, and motor bracket. For the reference surfaces of respective parts, surface treatment is excluded.
Table with sensors : A set of limit sensor, pre-origin sensor, and origin sensor is attached. However, when selecting an AC servomotor attachment, an origin sensor is not provided. Please use the C-phase or Z-phase of the encoder.

Remark: When using multiple special specifications for combination, please indicate by arranging supplemental codes in alphabetical order.

1N=0.102kgf=0.2248lbs.
1mm=0.03937inch

Specifications

Table 4 Accuracy

unit: mm

Identification number		Positioning repeatability	Positioning accuracy	Parallelism in table motion A	Parallelism in table motion B	Squareness of XY motion (1)
Single-axis specification	Two-axis specification					
TS 55/ 55	–	±0.002	0.005	0.005	0.015	0.005
–	CT 55/ 55		0.010			
TS 75/ 75	CT 75/ 75		0.005			
TS125/125	CT125/125					
TS125/220	–		0.008			
TS220/220	CT220/220					
TS220/310	–		0.015	0.008	0.020	0.008
TS260/350	CT260/350					
–	CT350/350					

Note (1) Applied to tables with two-axis specification.

Table 5 Maximum speed

Motor type	Maximum speed mm/s		
	Lead 1mm	Lead 2mm	Lead 5mm
AC servomotor	50	100	250
Stepper motor	30	60	150

Remark: To measure the practical maximum speed, it is required to consider operation patterns based on the motor to be used and load conditions.

Table 6.1 Maximum carrying mass of TS

Model and size	Ball screw lead mm	Maximum carrying mass kg	
		Horizontal	Vertical
TS 55/ 55	1	4.3	2.2
TS 75/ 75	1	21	1.5
TS125/125	1	72	2.3
	2	72	11
	5	72	29
TS125/220	2	115	9
	5	115	28
TS220/220	2	169	3.9
	5	169	24
TS220/310	2	256	–
	5	216	19
TS260/350	2	310	–
	5	310	18

Remark: Not operable when the maximum carrying mass is "-".

Table 6.2 Maximum carrying mass of CT

Model and size	Ball screw lead mm	Maximum carrying mass kg	
		Horizontal	Vertical (1)
CT 55/ 55	1	4.3	2.2
CT 75/ 75	1	21	1.3
CT125/125	1	72	2.3
	2	72	11
	5	72	29
CT220/220	2	169	3.9
	5	169	24
CT260/350	2	225	–
	5	225	18
CT350/350	2	286	–
	5	310	14

Note (1) When the Y-axis moves vertically.
Remark: Not operable when the maximum carrying mass is "-".

Table 7 Specifications of ball screw

unit: mm

Model and size		Ball screw lead	Axis name	Shaft dia.	Overall length
Single-axis specification	TS 55/ 55	1	–	6	68
	TS 75/ 75	1	–	6	89
	TS125/125	1	–	12	148
		2	–	12	148
		5	–	14	148
	TS125/220	2	–	12	269
		5	–	14	269
	TS220/220	2	–	14	269
		5	–	14	269
	TS220/310	2	–	14	389
		5	–	14	389
	TS260/350	2	–	20	435
		5	–	20	435
Two-axis specification	CT 55/ 55	1	X-axis, Y-axis	6	68
	CT 75/ 75	1	X-axis, Y-axis	6	89
	CT125/125	1	X-axis, Y-axis	12	148
		2	X-axis, Y-axis	12	148
		5	X-axis, Y-axis	14	148
	CT220/220	2	X-axis, Y-axis	14	269
		5	X-axis, Y-axis	14	269
	CT260/350	2	X-axis	20	330
			Y-axis	20	435
		5	X-axis	20	330
			Y-axis	20	435
	CT350/350	2	X-axis, Y-axis	20	435
		5	X-axis, Y-axis	20	435

Table 8 Table inertia and starting torque

Identification number			Table inertia J_T ×10^{-5}kg·m^2			Starting torque T_S N·m
			Lead 1mm	Lead 2mm	Lead 5mm	
Single-axis specification	TS 55/ 55		0.01	–	–	0.03
	TS 75/ 75		0.01	–	–	0.03
	TS125/125		0.20	0.23	0.55	0.07
	TS125/220		–	0.40	0.95	0.07
	TS220/220		–	0.73	1.1	0.09
	TS220/310		–	1.3	2.1	0.09
	TS260/350		–	3.8	5.6	0.12
Two-axis specification	CT 55/ 55	X-axis	0.01	–	–	0.03
		Y-axis	0.01	–	–	
	CT 75/ 75	X-axis	0.01	–	–	0.07
		Y-axis	0.01	–	–	
	CT125/125	X-axis	0.20	0.28	0.85	0.07
		Y-axis	0.20	0.23	0.55	
	CT220/220	X-axis	–	0.85	1.9	0.09
		Y-axis	–	0.73	1.1	
	CT260/350	X-axis	–	4.6	6.8	0.12
		Y-axis	–	3.8	5.6	
	CT350/350	X-axis	–	4.9	8.0	0.12
		Y-axis	–	4.6	5.9	

Mounting

For the processing accuracy of the Precision Positioning Table mounting surface and the tightening torque of the fixing screws, see page Ⅲ-29.

1N=0.102kgf=0.2248lbs.
1mm=0.03937inch

Sensor Specification

Table 9.1 Sensor timing chart for TS (single-axis specification)

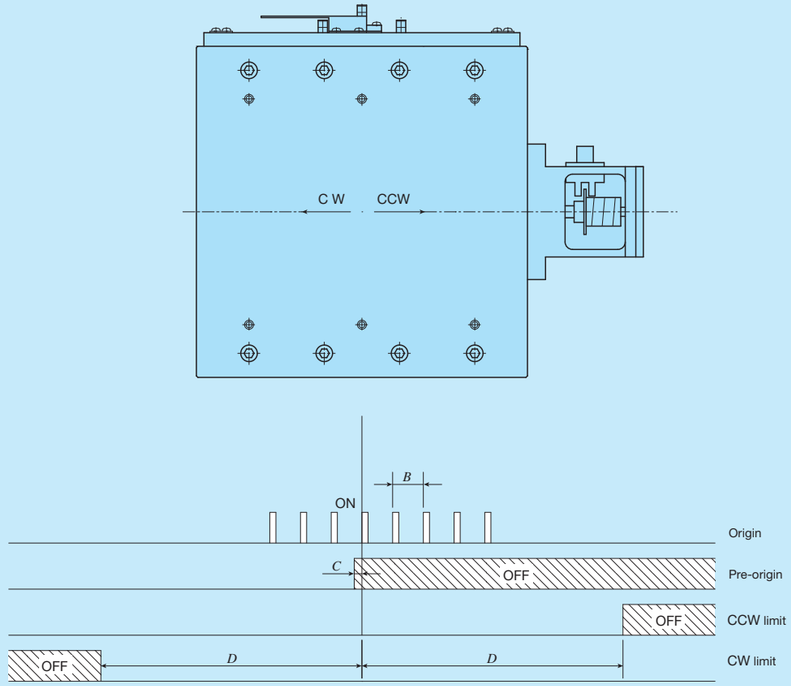

unit: mm

Identification number	Ball screw lead	*B*	*C*	*D*
TS 55/ 55	1	1	0.7	7.5
TS 75/ 75	1	1	0.7	12.5
TS125/125	1	1	0.7	25
	2	2	1.5	
	5	5	3	
TS125/220	2	2	1.5	60
	5	5	3	
TS220/220	2	2	1.5	60
	5	5	3	
TS220/310	2	2	1.5	90
	5	5	3	
TS260/350	2	2	1.5	125
	5	5	3	

Remarks 1. Mounting a sensor is specified using the corresponding identification number.
2. For the specifications of respective sensors, please see the section of sensor specification in General Explanation.
3. When selecting an AC servomotor attachment, an origin sensor is not provided. Please use the C-phase or Z-phase of the encoder.
4. Positions for mounting sensors vary depending on the identification numbers. For detailed information, please see the dimension tables of respective identification numbers.

Table 9.2 Sensor timing chart for CT (two-axis specification)

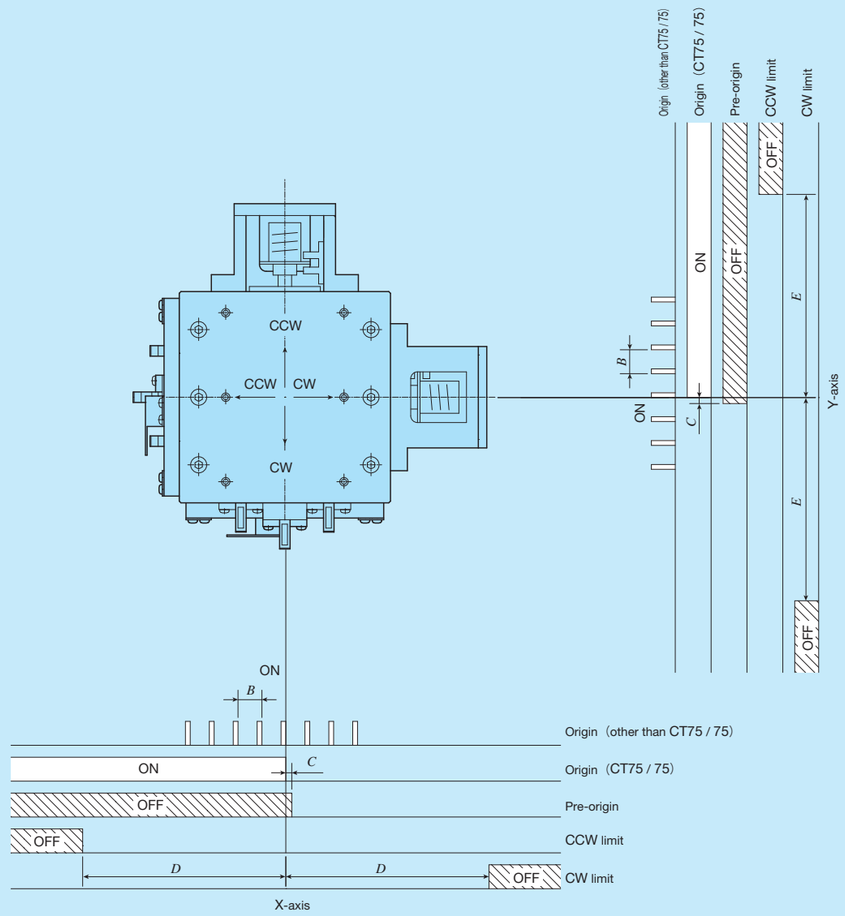

unit: mm

Identification number	Ball screw lead	*B*	*C*	*D*	*E*
CT 55/ 55	1	1	0.7	7.5	7.5
CT 75/ 75	1	–	0.7	12.5	12.5
CT125/125	1	1	0.7	25	25
	2	2	1.5		
	5	5	3		
CT220/220	2	2	1.5	60	60
	5	5	3		
CT260/350	2	2	1.5	75	125
	5	5	3		
CT350/350	2	2	1.5	125	125
	5	5	3		

Remarks 1. Mounting a sensor is specified using the corresponding identification number.
2. For the specifications of respective sensors, please see the section of sensor specification in General Explanation.
3. When selecting an AC servomotor attachment, an origin sensor is not provided. Please use the C-phase or Z-phase of the encoder.
4. Positions for mounting sensors vary depending on the identification numbers. For detailed information, please see the dimension tables of respective identification numbers.

1N=0.102kgf=0.2248lbs.
1mm=0.03937inch

Dimensions of Motor Attachment

TS55/55, CT55/55

AT601

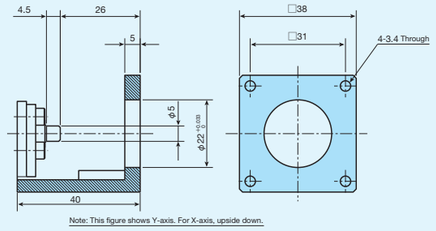

Note: This figure shows Y-axis. For X-axis, upside down.

TS75/75, CT75/75

AT601

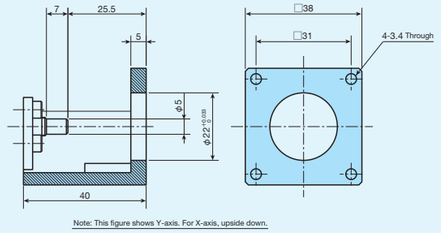

Note: This figure shows Y-axis. For X-axis, upside down.

TS125/125, CT125/125

AT602

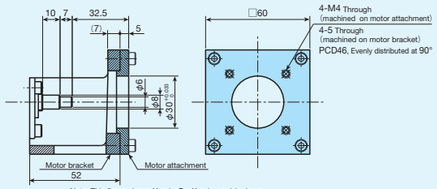

Note: This figure shows Y-axis. For X-axis, upside down.

TS125/220

AT602

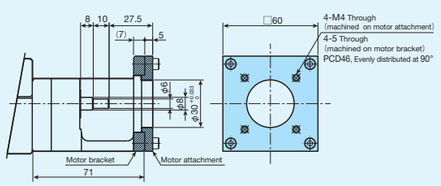

AT603

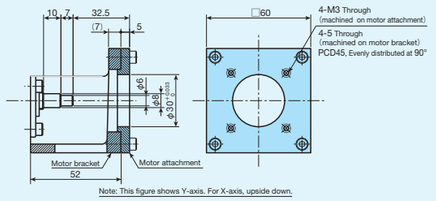

Note: This figure shows Y-axis. For X-axis, upside down.

AT603

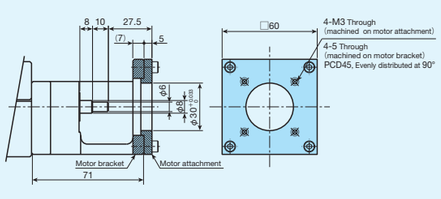

AT608

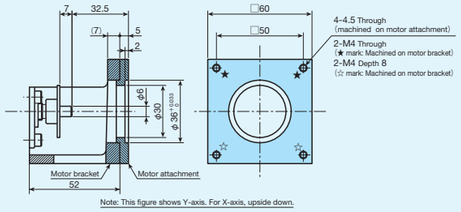

Note: This figure shows Y-axis. For X-axis, upside down.

AT608

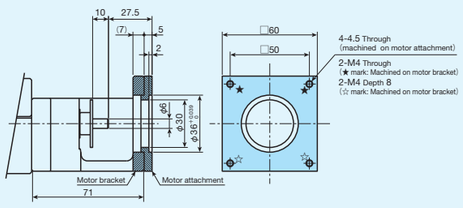

TS220/220, CT220/220

AT602

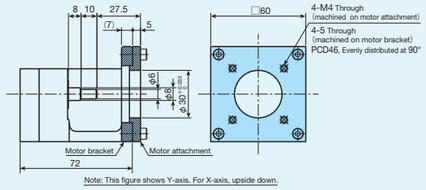

Note: This figure shows Y-axis. For X-axis, upside down.

AT603

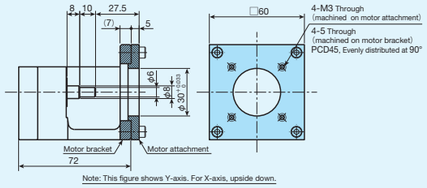

Note: This figure shows Y-axis. For X-axis, upside down.

AT608

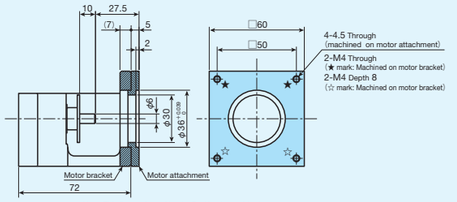

Note: This figure shows Y-axis. For X-axis, upside down.

TS220/310

AT604

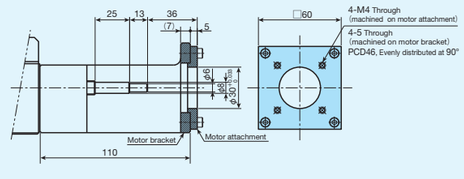

AT605

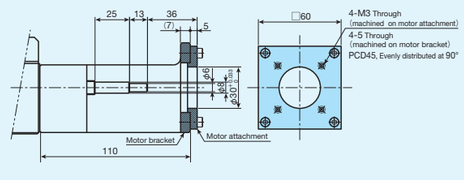

AT609

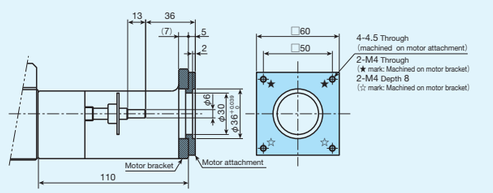

TS260/350

AT606

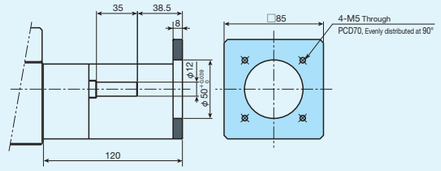

AT607

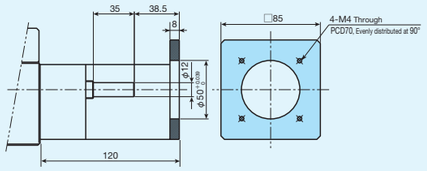

AT610

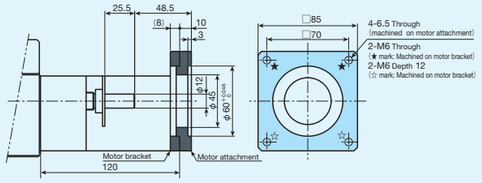

CT260/350

AT606

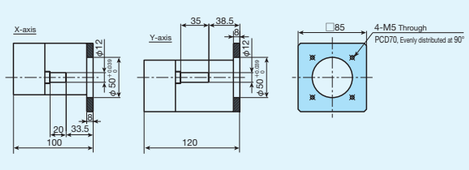

AT607

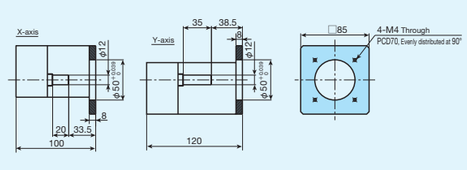

AT610

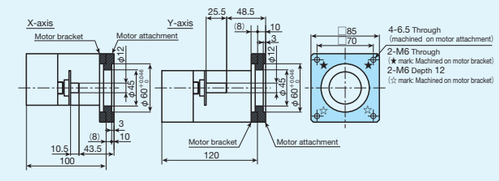

1N=0.102kgf=0.2248lbs.
1mm=0.03937inch

Dimensions of Motor Attachment

CT350/350

AT606

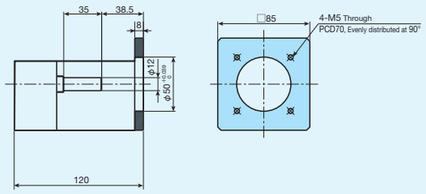

Note: This figure shows Y-axis. For X-axis, upside down.

AT607

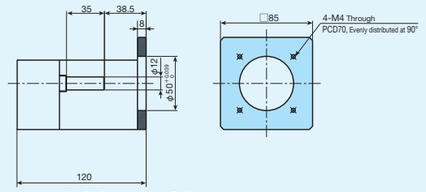

Note: This figure shows Y-axis. For X-axis, upside down.

AT610

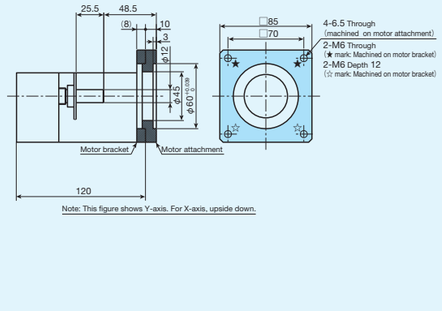

Note: This figure shows Y-axis. For X-axis, upside down.

TS55/55

● Specification without sensor

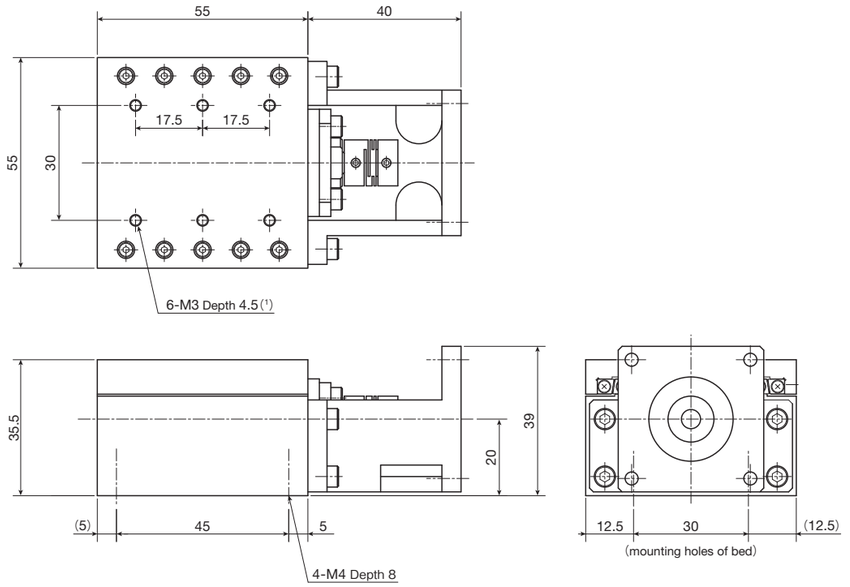

● Specification with sensor

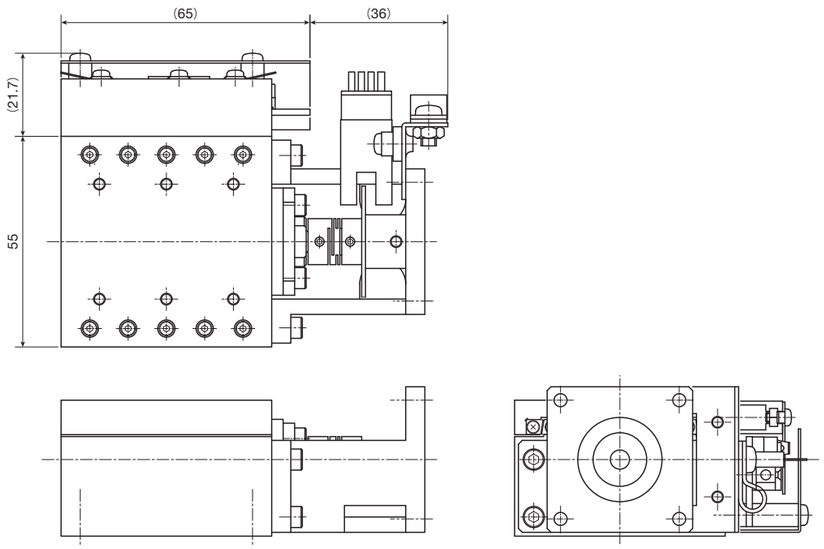

Stroke length: 15mm
Reference mass(2): 0.8kg

Notes (1) Too deep insertion depth of the mounting bolt may affect the running performance of the slide table, so never insert a bolt longer than the depth of the through hole.
(2) Mass of the sensor is not included.

1N=0.102kgf=0.2248lbs.
1mm=0.03937inch

TS75/75

● Specification without sensor

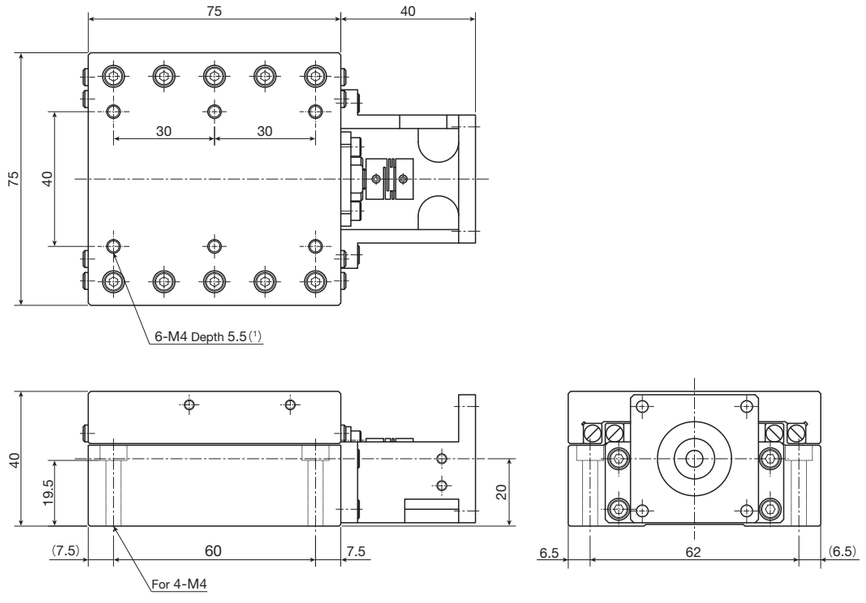

● Specification with sensor

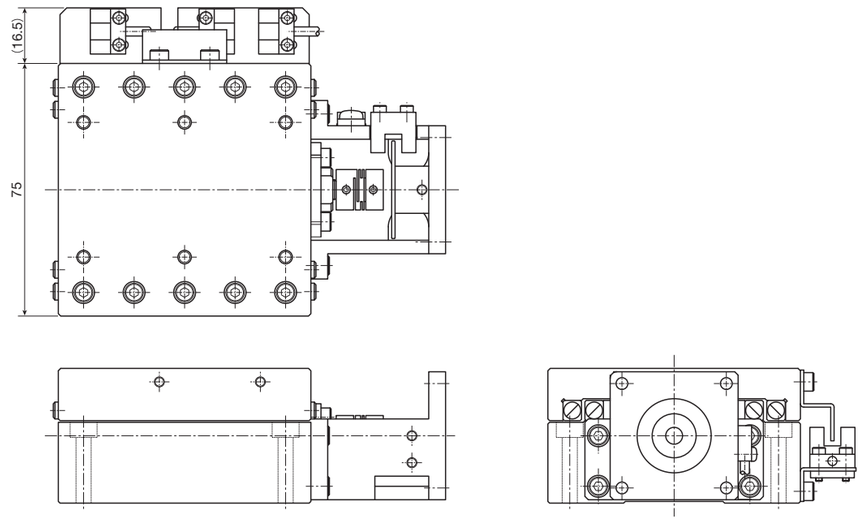

Stroke length: 25mm
Reference mass(2): 1.6kg

Notes (1) Too deep insertion depth of the mounting bolt may affect the running performance of the slide table, so never insert a bolt longer than the depth of the through hole.
(2) Mass of the sensor is not included.

TS125/125, TS220/220

● Specification without sensor

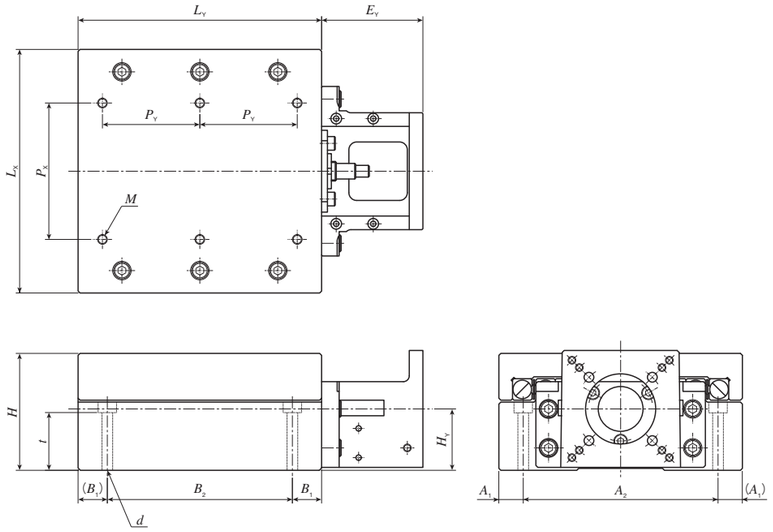

● Specification with sensor

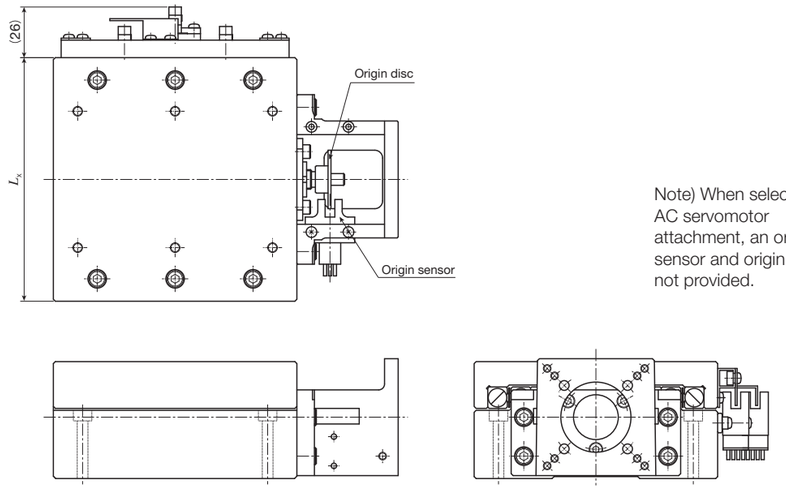

Note) When selecting an AC servomotor attachment, an origin sensor and origin disc are not provided.

unit: mm

Identification number	Dimensions of table			Stroke length	E_Y	Height of shaft center H_Y
	L_X	L_Y	H			
TS125/125(1)	125	125	60	50	52	31.5
TS220/220	220	220	65	120	72	33.5

Identification number	Mounting bolt			Bed mounting-related dimensions						Reference mass(2) kg
	M(3)	P_X	P_Y	d	t	A_1	A_2	B_1	B_2	
TS125/125(1)	6-M5 depth 10	70	50	For 4-M5	29.6	12.5	100	15	95	7.5
TS220/220	6-M6 depth 12	150	75	For 4-M6	27.5	20	180	20	180	16.0

Notes (1) The motor bracket is positioned 1.5mm higher than the upper surface of the table.
(2) Mass of the sensor is not included.
(3) Too deep insertion depth of the mounting bolt may affect the running performance of the slide table, so never insert a bolt longer than the depth of the through hole.

1N=0.102kgf=0.2248lbs.
1mm=0.03937inch

TS125/220, TS220/310, TS260/350

● Specification without sensor

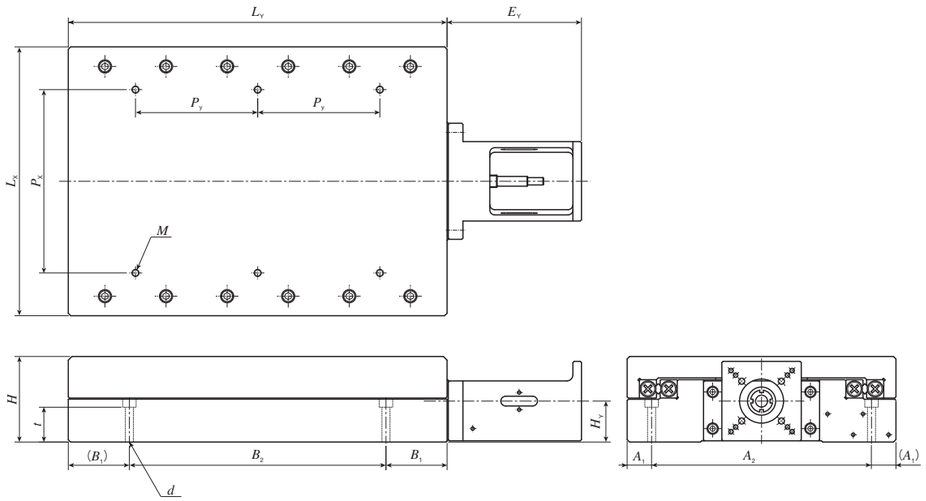

● Specification with sensor

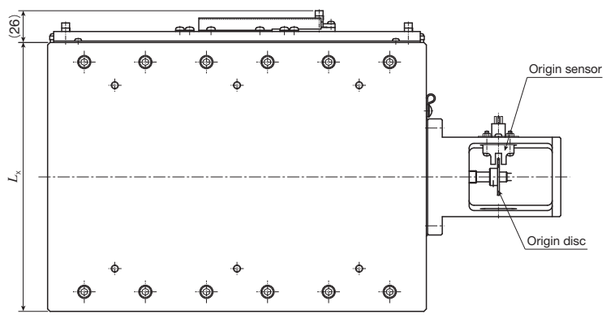

Note) When selecting an AC servomotor attachment, an origin sensor and origin disc are not provided.

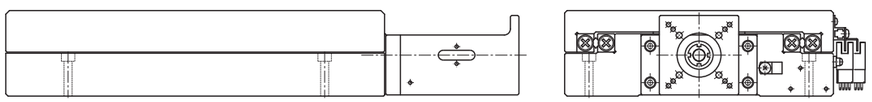

unit: mm

Identification number	Dimensions of table			Stroke length	E_Y	Height of shaft center H_Y
	L_X	L_Y	H			
TS125/220(1)	125	220	60	120	71	31.5
TS220/310	220	310	70	180	110	33.5
TS260/350	260	350	100	250	120	47.5

Identification number	Mounting bolt			Bed mounting-related dimensions						Reference mass(2) kg
	M(3)	P_X	P_Y	d	t	A_1	A_2	B_1	B_2	
TS125/220(1)	6-M5 depth 10	70	75	For 4-M5	29.6	12.5	100	20	180	11
TS220/310	6-M6 depth 12	150	100	For 4-M6	28.5	20	180	50	210	27
TS260/350	6-M6 depth 12	150	125	For 4-M8	45.4	22.5	215	50	250	48

Notes (1) The motor bracket is positioned 1.5mm higher than the upper surface of the table.
(2) Mass of the sensor is not included.
(3) Too deep insertion depth of the mounting bolt may affect the running performance of the slide table, so never insert a bolt longer than the depth of the through hole.

CT55/55

● Specification without sensor

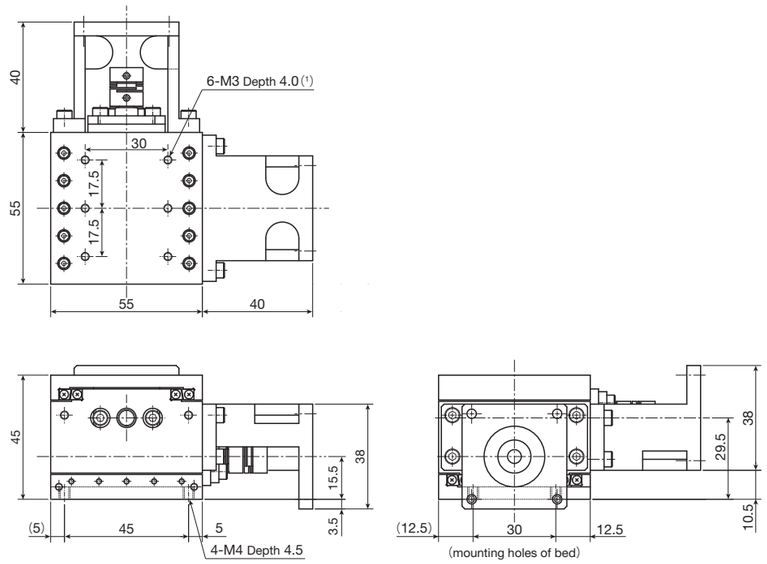

● Specification with sensor

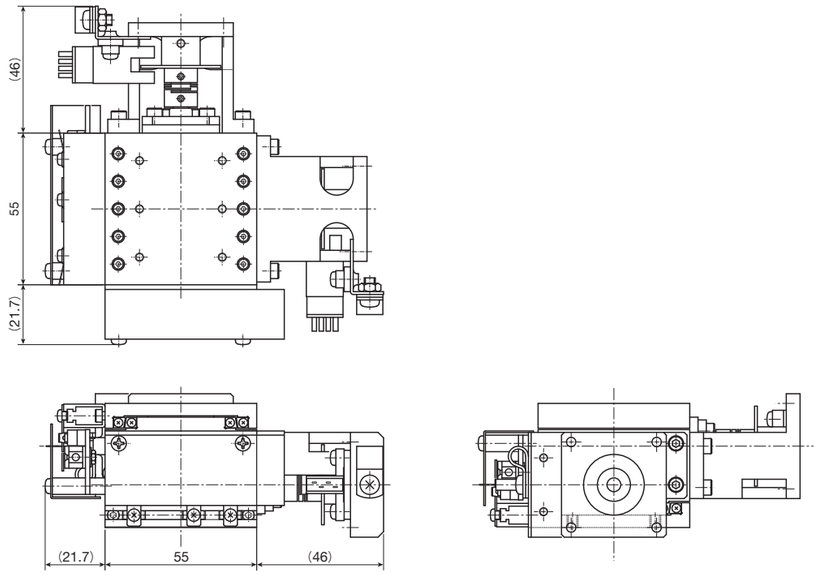

X- and Y-axis stroke length: 15mm
Reference mass(2): 1.7kg

Notes (1) Too deep insertion depth of the mounting bolt may affect the running performance of the slide table, so never insert a bolt longer than the depth of the through hole.
(2) Mass of the sensor is not included.

1N=0.102kgf=0.2248lbs.
1mm=0.03937inch

CT75/75

● Specification without sensor

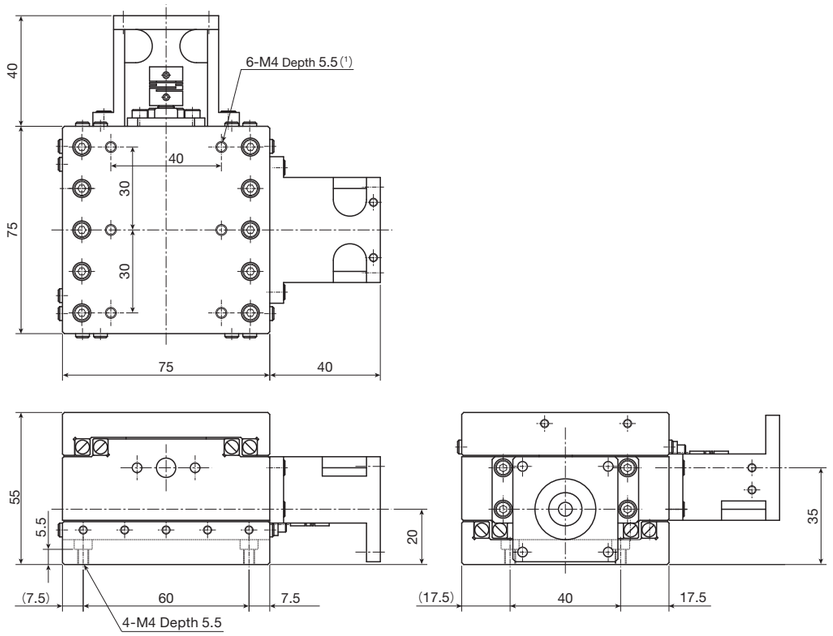

● Specification with sensor

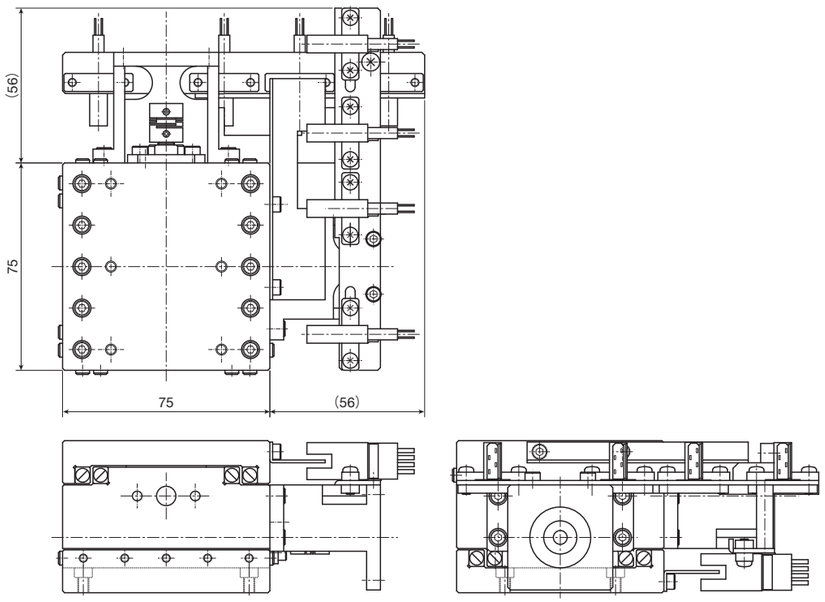

X- and Y-axis stroke length: 25mm
Reference mass (2): 2.0kg

Notes (1) Too deep insertion depth of the mounting bolt may affect the running performance of the slide table, so never insert a bolt longer than the depth of the through hole.
(2) Mass of the sensor is not included.

CT125/125

● Specification without sensor

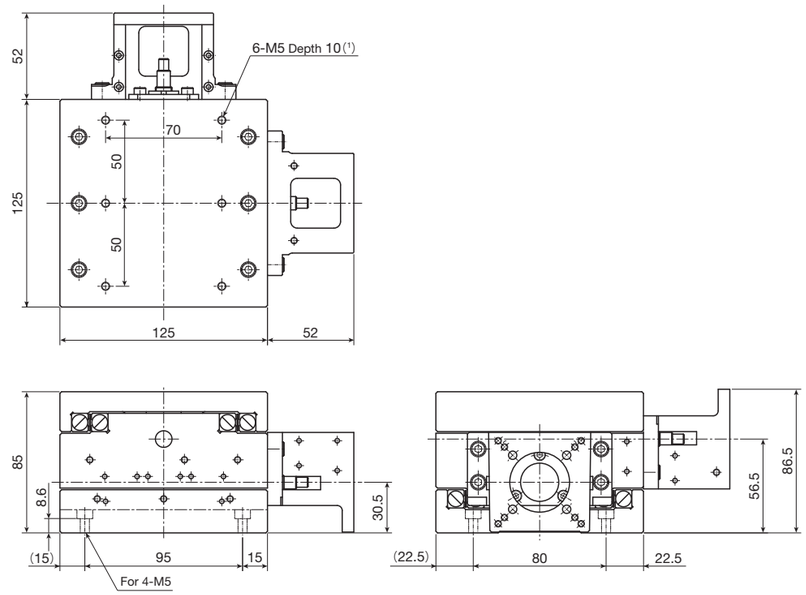

● Specification with sensor

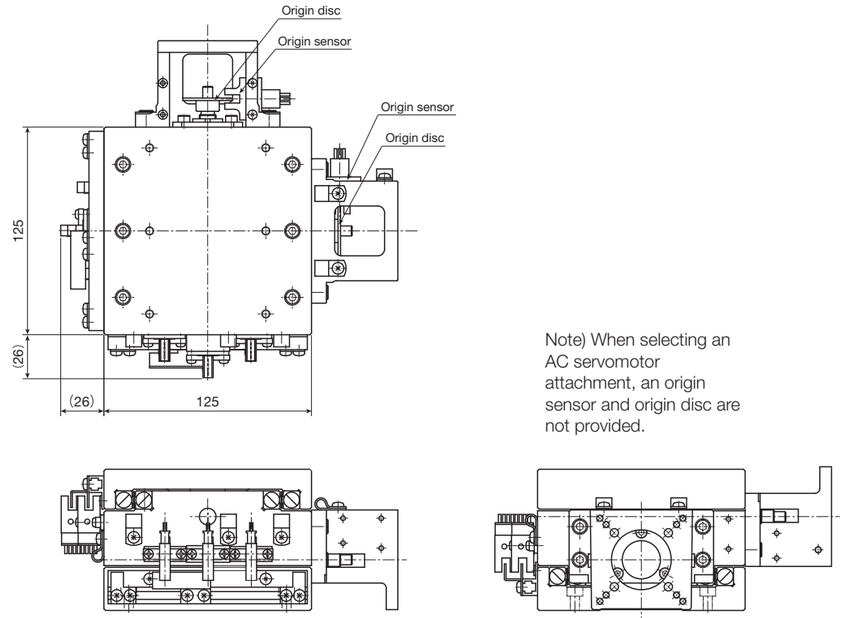

Note) When selecting an AC servomotor attachment, an origin sensor and origin disc are not provided.

X- and Y-axis stroke length: 50mm
Reference mass (2): 1.7kg

Notes (1) Too deep insertion depth of the mounting bolt may affect the running performance of the slide table, so never insert a bolt longer than the depth of the through hole.
(2) Mass of the sensor is not included.

1N=0.102kgf=0.2248lbs.
1mm=0.03937inch

CT220/220, CT260/350, CT350/350

● Specification without sensor

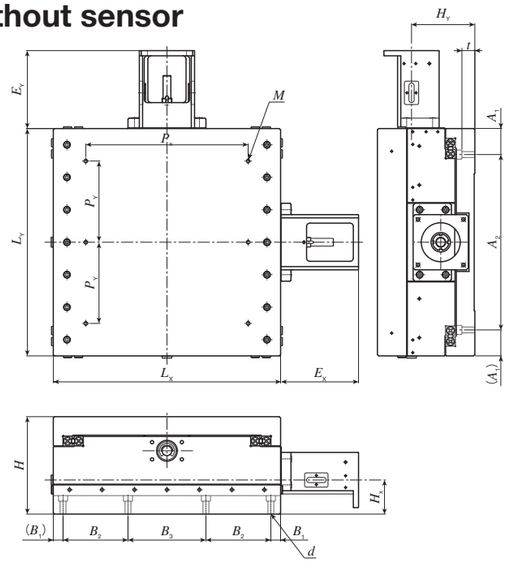

● Specification with sensor

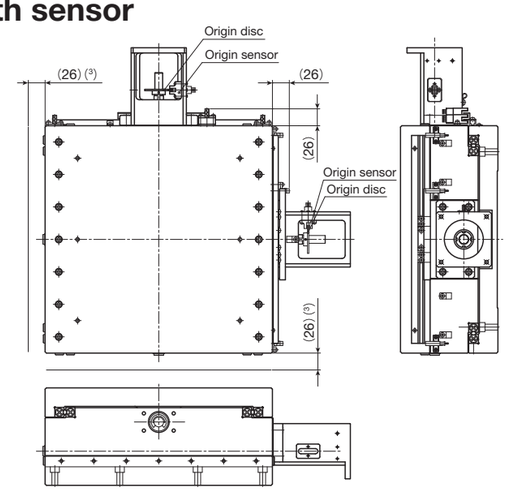

Note) When selecting an AC servomotor attachment, an origin sensor and origin disc are not provided.

unit: mm

Identification number	Dimensions of table			Stroke length		E_X	E_Y	Height of shaft center	
	L_X	L_Y	H	X-axis	Y-axis			H_X	H_Y
CT220/220	220	220	100	120	120	72	72	31.5	68.5
CT260/350	260	350	150	150	250	100	120	52.5	97.5
CT350/350	350	350	150	250	250	120	120	52.5	97.5

Identification number	Mounting bolt			Bed mounting-related dimensions							Reference mass(2) kg
	M(1)	P_X	P_Y	d	t	A_1	A_2	B_1	B_2	B_3	
CT220/220	6-M6 depth 12	150	75	For 8-M6	7.5	30	160	15	40	110	20
CT260/350	6-M6 depth 12	150	125	For 8-M8	20	40	270	15	55	120	66
CT350/350	6-M6 depth 12	250	125	For 8-M8	20	40	270	15	100	120	77

Notes (1) Too deep insertion depth of the mounting bolt may affect the running performance of the slide table, so never insert a bolt longer than the depth of the through hole.
(2) Mass of the sensor is not included.
(3) Applicable to CT220/220. This shows the dimension when the sensor is attached.

●Option base dimensions for TS55/55 and CT55/55

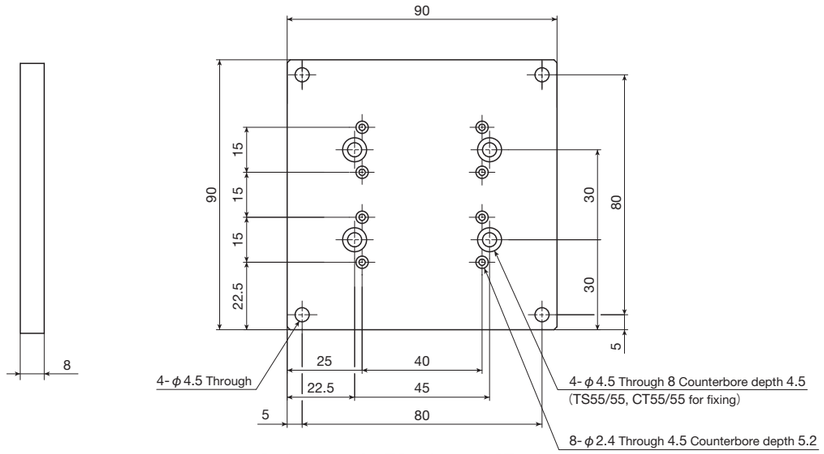

Option base for TS55/55 and CT55/55

1N=0.102kgf=0.2248lbs.
1mm=0.03937inch

TSLB

TSLB

Timing belt

Linear

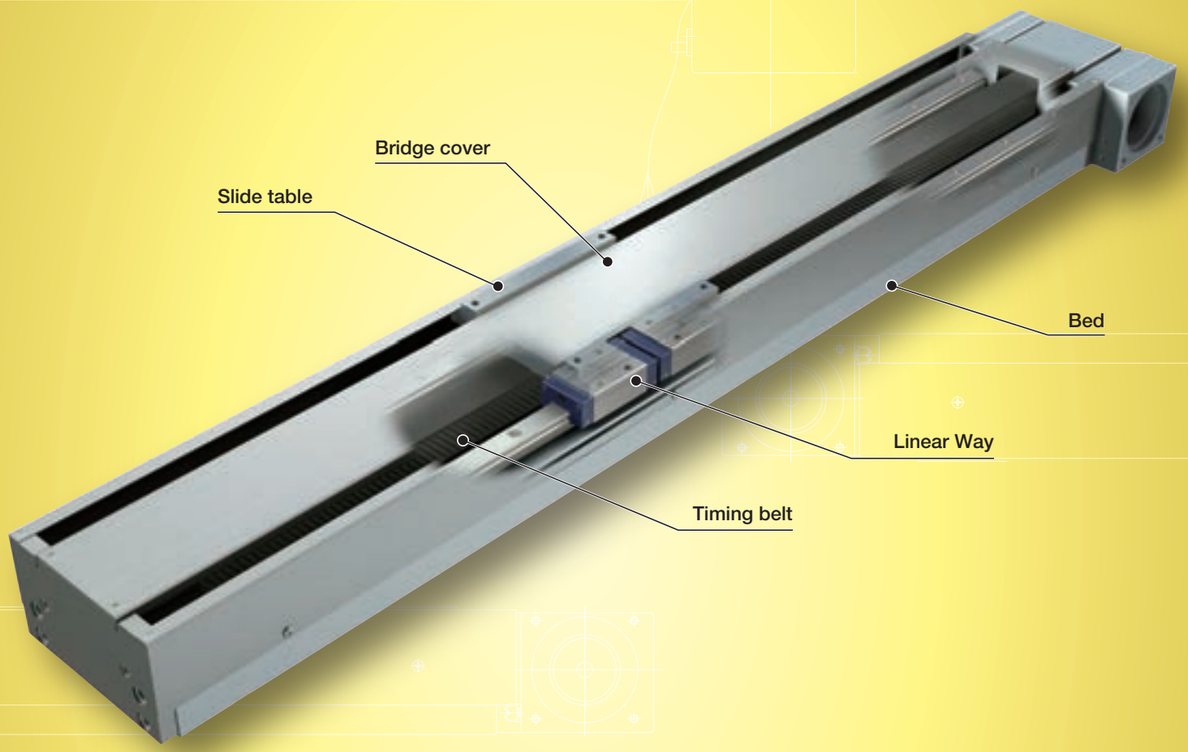

Major product specifications

Driving method	High-tensile timing belt
Linear motion rolling guide	Linear Way（ball type）
Built-in lubrication part	No built-in
Material of table and bed	High-strength aluminum alloy
Sensor	Provided as standard

Accuracy

unit: mm

Positioning repeatability	±0.070～0.100
Positioning accuracy	–
Lost motion	–
Parallelism in table motion A	–
Parallelism in table motion B	0.050～0.070
Attitude accuracy	–
Straightness	–
Backlash	–

Points

● High speed and long stroke positioning table

1 High speed movement-enabled and long stroke positioning table with highly durable and high-tensile steel cord-contained timing belt incorporated into the feeding mechanism of the slide table.

● Light weight and long stroke

2 Lightweight solution is achieved by adopting the slide table and bed made from high-strength aluminum alloy. Series of stroke length up to 1,200mm is available.

● Stable high running accuracy

3 Incorporation of two sets of Linear Way in parallel realized stable and high running performance.

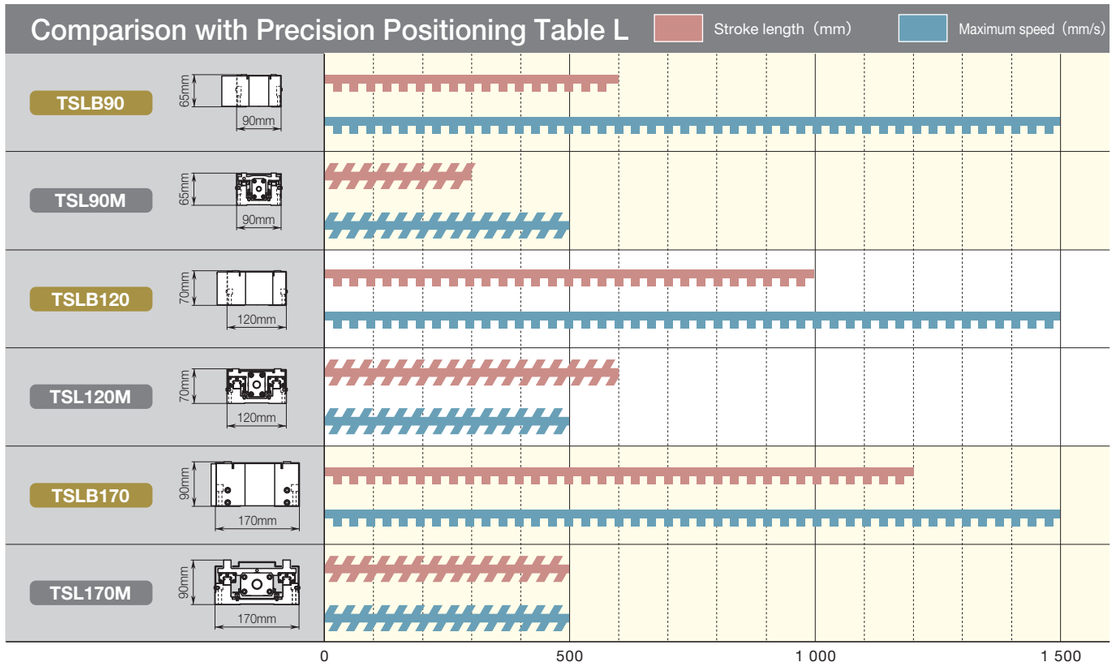

Variation

Shape	Model and size	Table width (mm)	Stroke length（mm） 300	400	500	600	700	800	900	1 000	1 200
90mm	TSLB 90	90	☆	☆	☆	☆	–	–	–	–	–
120mm	TSLB120	120	–	–	–	☆	☆	☆	☆	☆	–
170mm	TSLB170	170	–	–	–	–	–	☆	–	☆	☆

1N=0.102kgf=0.2248lbs.
1mm=0.03937inch

Identification Number

Example of an Identification Number

1	2		3		4
TSLB	120	-	700	/	ATA01

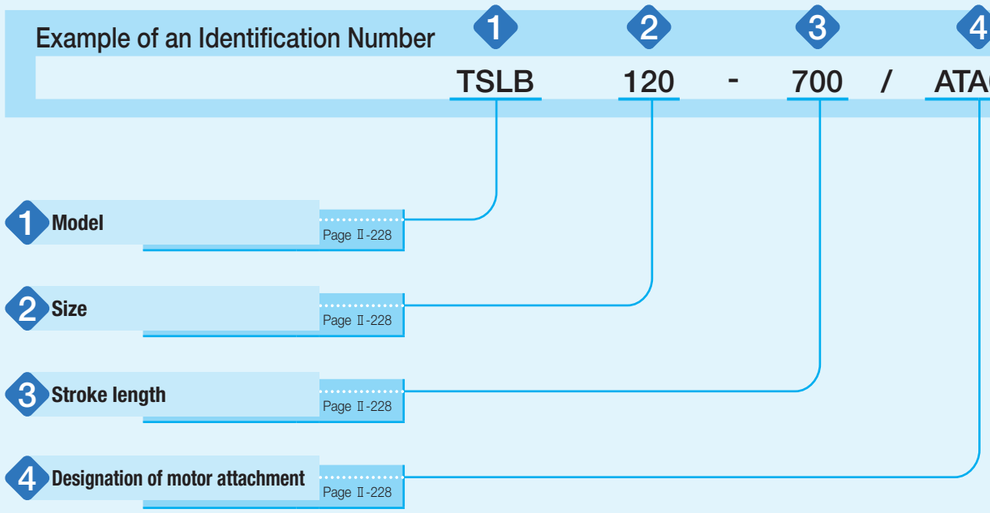

Identification Number and Specification

1 Model

TSLB: Precision Positioning Table LB

2 Size

Size indicates table width.
Select a size from the list of Table 1.

3 Stroke length

Select a stroke length from the list of Table 1.

Table 1 Sizes, table width dimensions, and stroke lengths unit: mm

Model and size	Table width	Stroke length
TSLB 90	90	300, 400, 500, 600
TSLB120	120	600, 700, 800, 900, 1 000
TSLB170	170	800, 1 000, 1 200

4 Designation of motor attachment

Motor attachment shown in Table 2 is attached.

- Motor should be prepared by customer.
- A coupling shown in Table 3 is mounted on the main body before shipment. However, the final position adjustment should be made by customer since it is only temporarily fixed.

Table 2 Application of motor attachment

Motor to be used				Flange size mm	Motor attachment	
Type	Manufacturer	Series	Model		TSLB 90 TSLB120	TSLB170
Stepper motor	ORIENTAL MOTOR Co., Ltd.	RKS CRK	**CRK56**(1)	□60	ATA01	–
			RKS59	□85	–	ATA02

Note (1) Applicable to the outer diameter ϕ8 of motor output shaft.
Remark: For detailed motor specifications, please see respective motor manufacturer's catalog.

Table 3 Coupling models

Model and size	Coupling models	Manufacturer	Coupling inertia J_c $\times 10^{-5}$kg · m^2
ATA01	MOL-32C- 8×12	Nabeya Bi-tech Kaisha	1.4
ATA02	MOL-40C-12×14	Nabeya Bi-tech Kaisha	4.1

Remark: For detailed coupling specifications, please see respective manufacturer's catalog.

1N=0.102kgf=0.2248lbs.
1mm=0.03937inch

Specifications

Table 4 Accuracy

unit: mm

Model and size	Stroke length	Positioning repeatability	Parallelism in table motion B
TSLB 90	300	±0.070	0.050
	400		
	500		
	600		0.070
TSLB120		±0.100	0.070
TSLB170		±0.100	0.070

Table 5 Maximum speed and resolution

Model and size	Maximum speed (1) mm/s	Resolution (2) mm
TSLB 90 TSLB120 TSLB170	1 500	0.1

Notes (1) To measure the practical maximum speed, it is required to consider operation patterns based on the motor to be used and load conditions.

(2) This is a value given when the number of fraction sizes of the motor is 1,000 pulses/rev.

Table 6 Maximum carrying mass

unit: kg

Model and size	Maximum carrying mass
TSLB 90	5
TSLB120	27
TSLB170	29

Remark: Applicable in the horizontal direction.

Table 7 Table inertia and starting torque

Model and size	Table inertia J_T $\times 10^{-5}$kg·m^2	Starting torque T_S N·m
TSLB 90	19	0.3
TSLB120	42	0.5
TSLB170	64	0.6

Mounting

For the processing accuracy of the Precision Positioning Table mounting surface and the tightening torque of the fixing screws, see page Ⅲ-29.

Sensor Specification

Table 8 Sensor timing chart

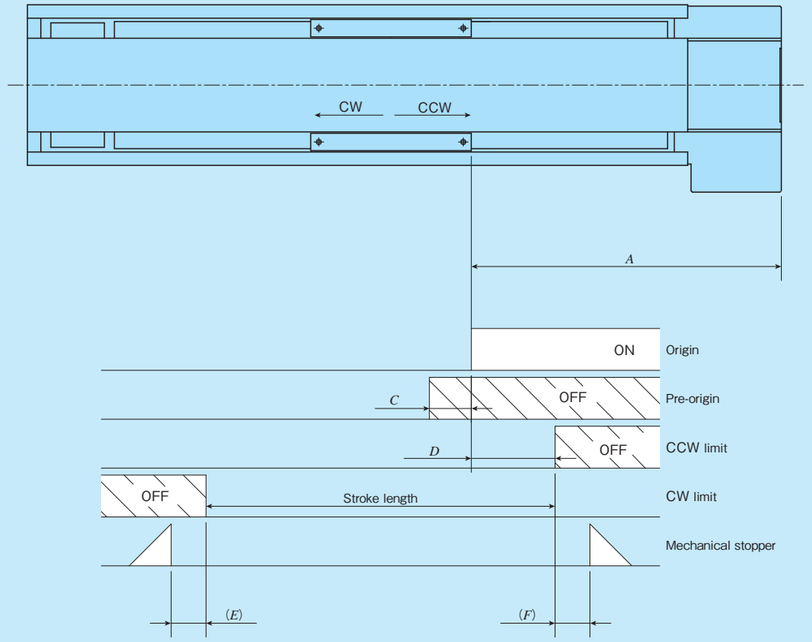

unit: mm

Model and size	A	C	D	E	F
TSLB 90	120	50	20	13	10
TSLB120	120	50	20	8	5
TSLB170	160	50	20	23	30

Remark: For detailed specifications of respective sensors, please see the section of sensor specification in General Explanation.

1N=0.102kgf=0.2248lbs.
1mm=0.03937inch

Dimensions of Motor Attachment

TSLB90

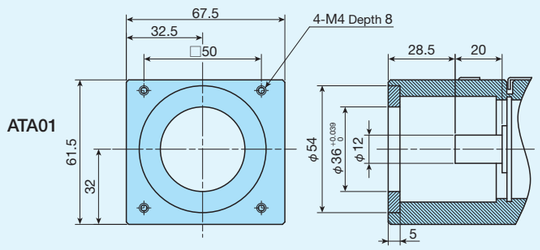

TSLB120

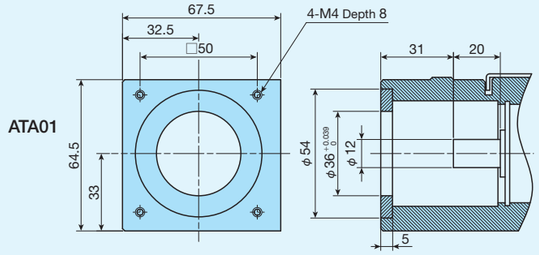

TSLB170

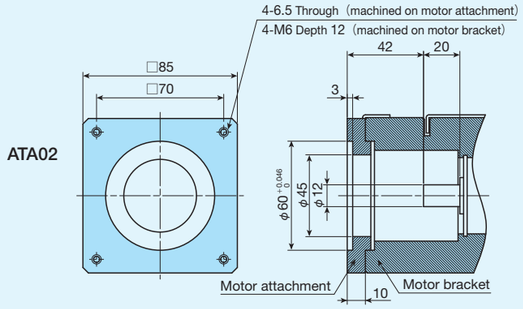

IKO Precision Positioning Table LB

TSLB90

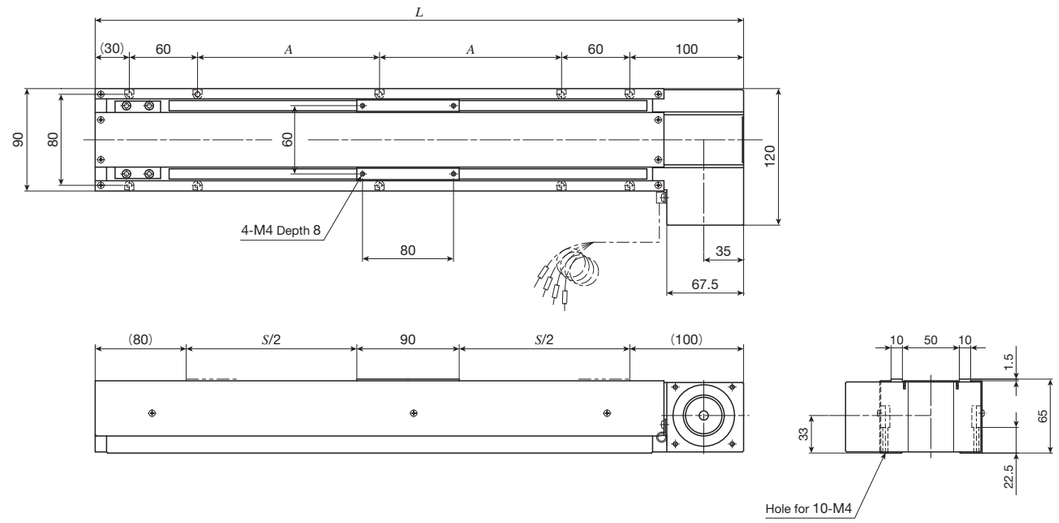

unit: mm

Identification number	Stroke length *S*	Overall length *L*	Mounting holes of bed *A*	Mass (Ref.) kg
TSLB90-300	300	570	160	6.5
TSLB90-400	400	670	210	7.5
TSLB90-500	500	770	260	8.5
TSLB90-600	600	870	310	9.5

1N=0.102kgf=0.2248lbs.
1mm=0.03937inch

IKO Precision Positioning Table LB

TSLB120

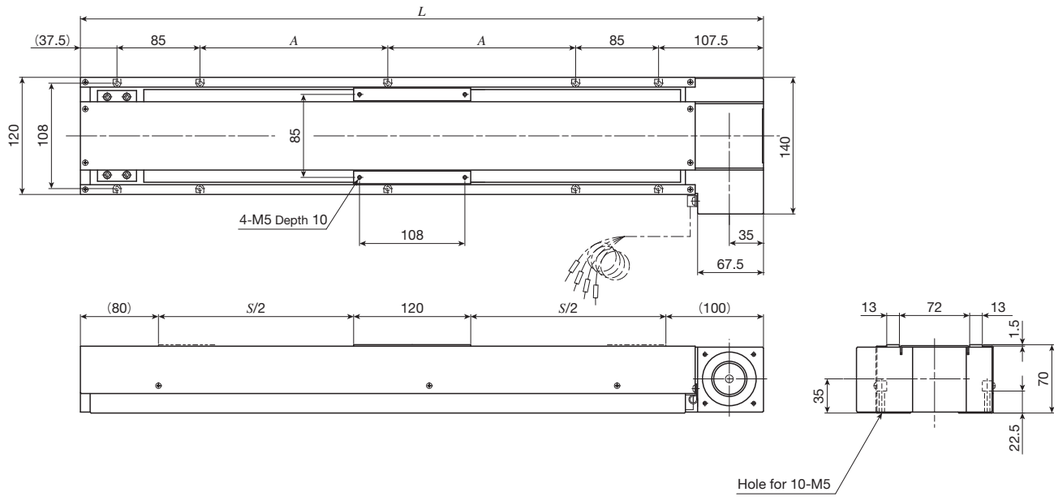

unit: mm

Identification number	Stroke length S	Overall length L	Mounting holes of bed A	Mass (Ref.) kg
TSLB120- 600	600	900	292.5	13
TSLB120- 700	700	1 000	342.5	14
TSLB120- 800	800	1 100	392.5	15
TSLB120- 900	900	1 200	442.5	16
TSLB120-1000	1 000	1 300	492.5	17

TSLB170

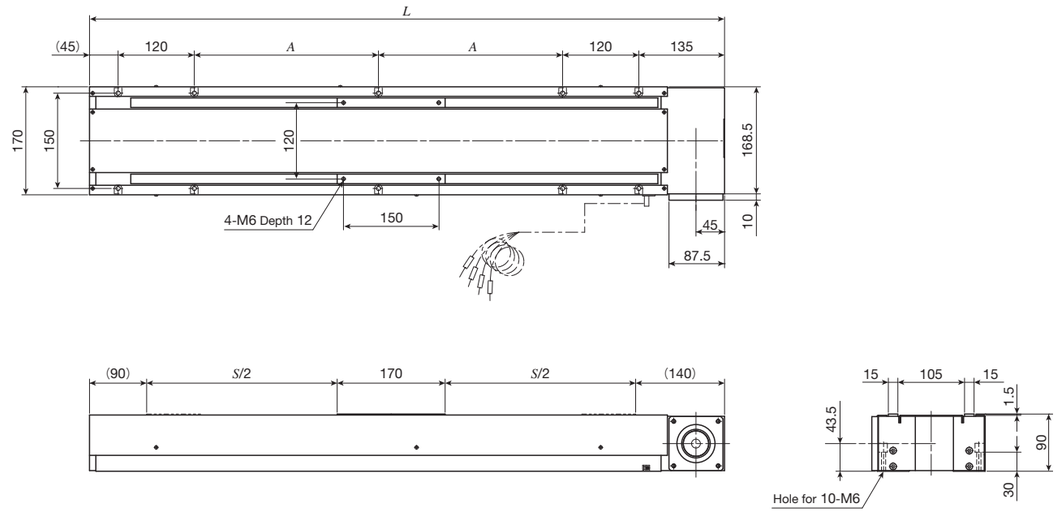

unit: mm

Identification number	Stroke length S	Overall length L	Mounting holes of bed A	Mass (Ref.) kg
TSLB170- 800	800	1 200	390	23
TSLB170-1000	1 000	1 400	490	26
TSLB170-1200	1 200	1 600	590	29

TSLB

1N=0.102kgf=0.2248lbs.
1mm=0.03937inch

NT
(NT…V, NT…H, NT…XZ, NT…XZH)

NT

Linear motor

Linear motion

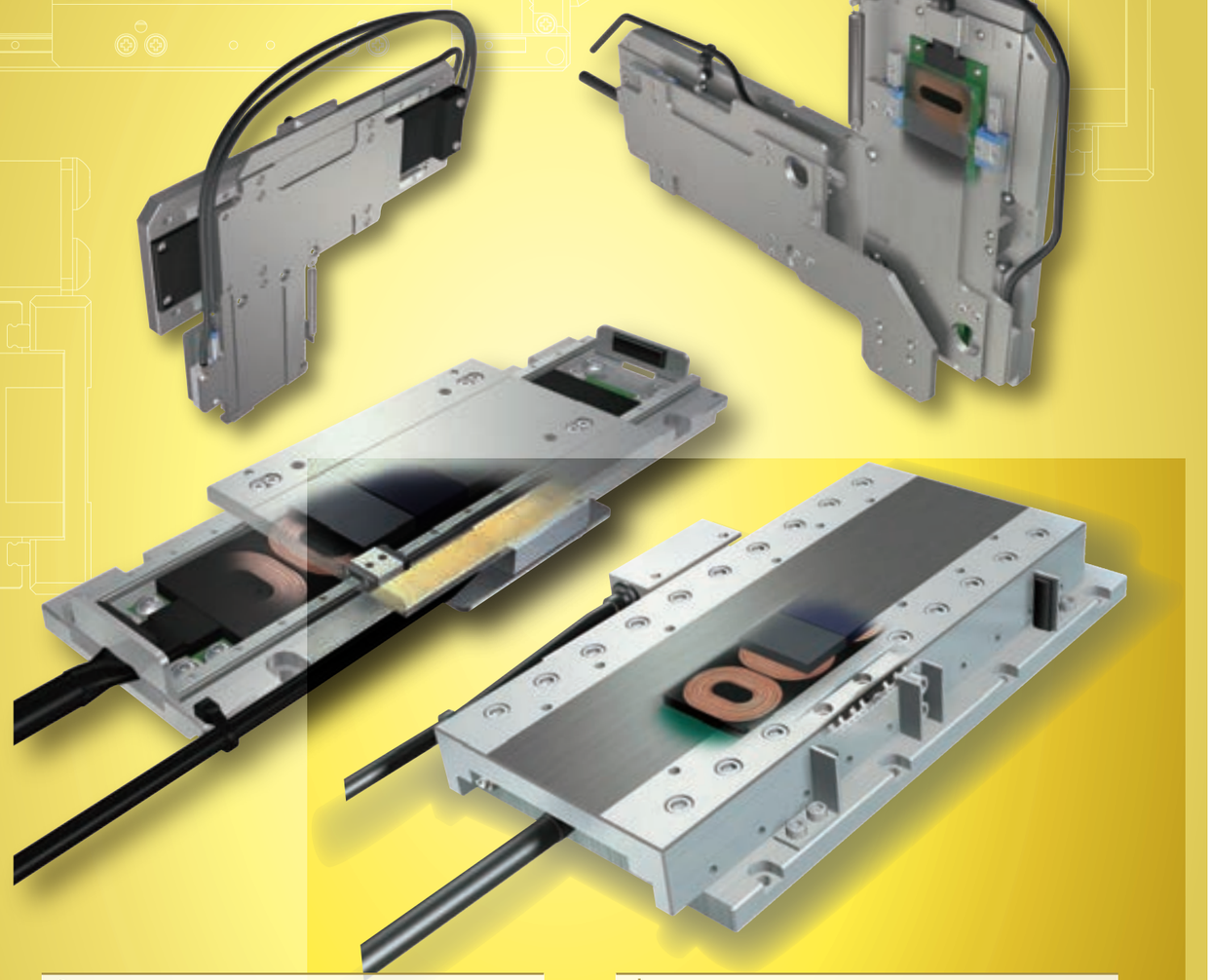

Major product specifications

Driving method	Linear motor
Linear motion rolling guide	Linear Way(ball type) Crossed Roller Way(roller type)
Built-in lubrication part	Lubrication part "C-Lube" is built-in (except for NT38V, NT55V and NT···H)
Material of table and bed	High carbon steel
Sensor	Provided as standard

Accuracy

unit: mm

Positioning repeatability	±0.0001～0.0005
Positioning accuracy	–
Lost motion	–
Parallelism in table motion A	–
Parallelism in table motion B	–
Attitude accuracy	–
Straightness	–
Backlash	–

Ultracompact, state-of-the-art linear motor table NT series!

Nano Linear NT is a moving magnet type linear motor table with extremely low profile.
For guiding parts of the moving table, Linear Way or Crossed Roller Way well-established in the area of miniature linear motion rolling guides is used in combination with linear motor and high-resolution linear encoder to realize highly accurate positioning.
Thanks to adoption of high-performance neodymium magnet, large thrust force can be acquired and therefore high-speed and highly responsive positioning is possible, despite its very small body. In addition, high cleanliness is realized as the mechanical contact part is only the linear motion rolling guide thanks to adoption of a landmark driving method without moving cables.

Nano Linear NT specifications list

Model and size		Standard type NT···V						
		NT38V10	NT38V18	NT55V25	NT55V65	NT80V25	NT80V65	NT80V120
Sectional shape		38, 11, 26		55, 14		80, 16		
Maximum thrust	N	3	3	25	25	36	36	36
Rated thrust	N	0.6	0.8	7	7	8	8	8
Maximum load mass	kg	0.5	0.5	5	5	5	5	5
Effective stroke length	mm	10	18	25	65	25	65	120
Resolution	μm	0.1 / 0.5	0.1 / 0.5	0.1 / 0.5	0.1 / 0.5	0.1 / 0.5	0.1 / 0.5	0.1 / 0.5
Maximum speed	mm/s	270 / 500	270 / 500	270 / 1000 / 1300	270 / 1000 / 1300	270 / 1000 / 1300	270 / 1000 / 1300	270 / 1000 / 1300
Positioning repeatability	μm	±0.5	±0.5	±0.5	±0.5	±0.5	±0.5	±0.5

Model and size		High accuracy type NT···H		Pick and place unit NT···XZ		High thrust pick and place unit NT···XZH	
		NT88H25	NT88H65	NT80XZ4510		NT90XZH2510	
Sectional shape		88, 25		210, 18, 18, 5, 153		(268), 260, 29.5, 29.5, 160, (168)	
				X-axis	Z-axis	X-axis	Z-axis
Maximum thrust	N	25	25	50	25	70	70
Rated thrust	N	5	5	10	2.5	Natural air cooling: 16 Air cooling: 20	Natural air cooling: 16 Air cooling: 20
Maximum load mass	kg	5	5	–	0.1	–	0.2
Effective stroke length	mm	25	65	45	10	25	10
Resolution	μm	0.01 / 0.05	0.01 / 0.05	0.1 / 0.5	0.1 / 0.5	0.1 / 0.5	0.1 / 0.5
Maximum speed	mm/s	90 / 400	90 / 400	270 / 1000 / 1300	270 / 800 / 800	270 / 1000 / 1300	270 / 1000 / 1000
Positioning repeatability	μm	±0.1	±0.1	±0.5	±0.5	±0.5	±0.5

Operating principle of Nano Linear NT

Nano Linear NT is structured with magnet and optical linear encoder scale deployed as a rotator, and an air-core coil and optical linear encoder scale head deployed as a stator within its compact body. As indicated in the right figure, the coil is subject to horizontal force due to flux that always works in vertical direction by the magnet and coil yoke, and rotational flux that is generated around the coil by the coil current (Fleming's left-hand rule). By switching the coil current to certain direction corresponding to the flux direction, continuous thrust force in a certain direction can be obtained and linear motions of the rotator is maintained. Traveling and accurate positioning are performed by acceleration control by current amount and feedback by linear encoder.

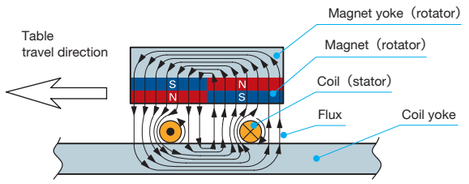

1N=0.102kgf=0.2248lbs.
1mm=0.03937inch

NT···V [Standard type]

NT···V is a linear motor table with excellent cost effectiveness realized by use of Linear Way L for miniature linear motion rolling guide in the cable guiding parts, reduction of number of parts and review of parts shapes. NT38V10, the smallest in the series, is only 11mm in sectional height, 38mm in table width and 62mm in overall length. It contributes further miniaturization of positioning mechanism. Motion network EtherCAT compatible driver and SSCNETⅢ/H compatible driver are also available and smoother and higher speed and accuracy motions are realized by streamlined wiring.

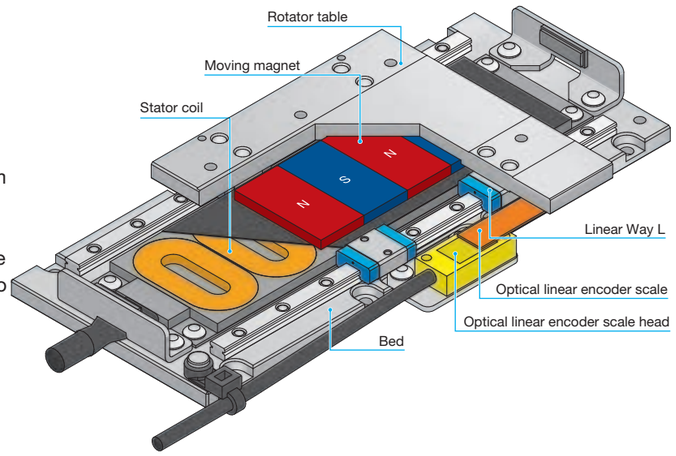

Points

1 ● Ultracompact

We pursued further miniaturization thoroughly. Especially, NT38V10, the smallest in the series, is only 11mm in sectional height, 38mm in table width and 62mm in overall length. The occupied space is not increased even when many tables are layered, so further miniaturization of the positioning mechanism is promoted.

Model and size	NT38V10	NT38V18	NT55V25	NT55V65	NT80V25	NT80V65	NT80V120
Sectional shape (mm)	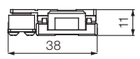		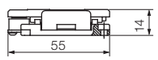		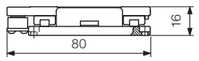		

2 ● Compatible with vertical mounting structure

Falling of moving table in power shutdown is prevented by integration of individual spring system balance mechanism. Making use of low profile and compact characteristics of NT···V, multiple pick and place mechanism can be established.

Multiple pick and place mechanism (image)

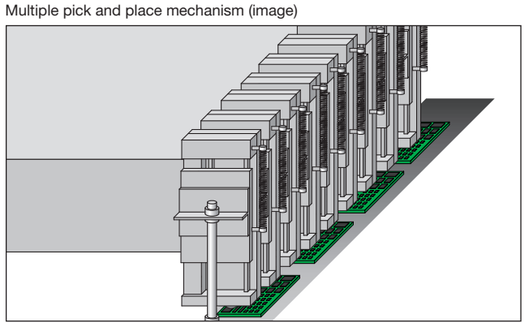

Spring system balance mechanism

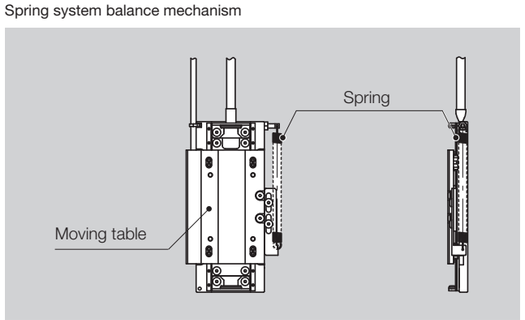

Remark: Vertical mounting structure is prepared based on respective usages. As we select spring according to your use conditions, please contact IKO.

3 ● Two-axis parallel operation

Performing rigid-connection of two units of NT···V arranged in parallel and driving with a single specific driver enables high thrust force and stable attitude accuracy.

Features of two-axis parallel operation

- Large thrust force can be obtained by two-axis driving.
- Driving right and left tables can minimize the table delay and flame torsion.
- Table delay and flame torsion are minimized, which ensures high positioning accuracy.
- As compared with two-axis synchronization control system, this can reduce the cost.

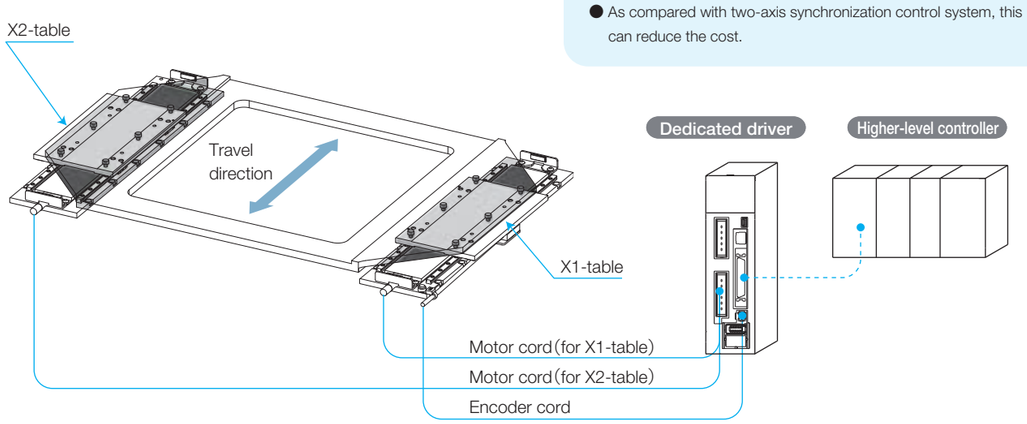

Remark: If two-axis parallel operation is required, please contact IKO.

4 ● XY two-axis combination specification

Two units of NT80V can be used in combination without any special attachment and XY-table with low profile can be easily established.

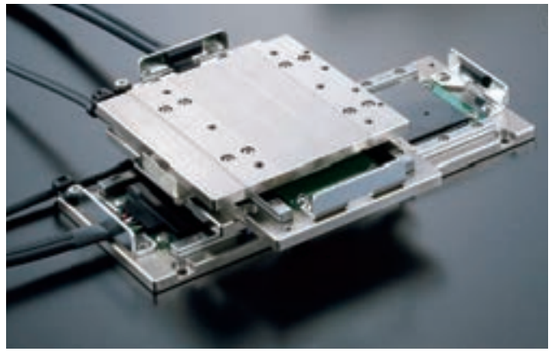

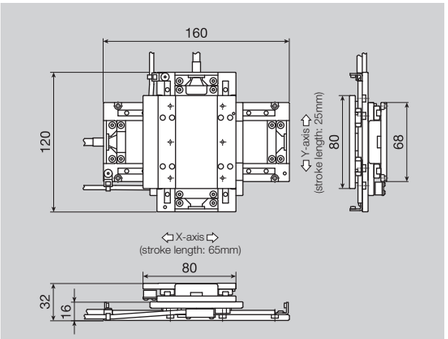

5 ● Motion network is supported

Drivers compatible with motion network EtherCAT, SSCNETⅢ/H , and MECHATROLINK are also available, so an advanced system with streamlined wiring can be configured.

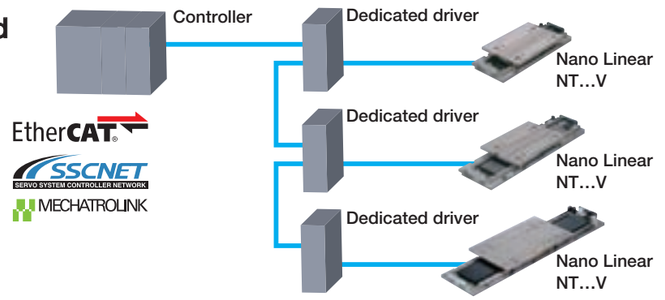

Remark: EtherCAT® is registered trademark and patented technology, licensed by BeckhoffAutomation GmbH, Germany.
SSCNETⅢ/H is a motion network communication system for servo system control developed by Mitsubishi Electric Corporation.
MECHATROLINK is an open field network controlled by MECHATROLINK Members Association.

1N=0.102kgf=0.2248lbs.
1mm=0.03937inch

NT···H [High accuracy type]

NT···H is a high-accuracy linear motor table that has realized high rigidity and smooth motions without pulsation comparative with air static pressure bearing by positioning accuracy and running straightness below 1 μm, using roller type Anti-Creep Cage Crossed Roller Way in the table guiding parts.

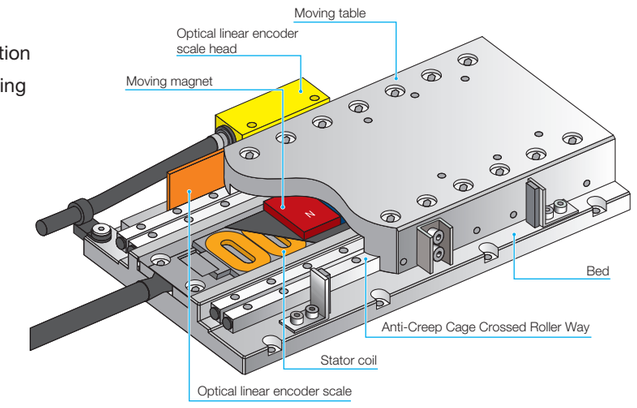

Points

1 ● High attitude accuracy

Combination of parts processed with high accuracy and Anti-Creep Cage Crossed Roller Way realizes attitude accuracy of 5 sec or less. Variations in attitude due to movement is minimized, which ensures high positioning repeatability.



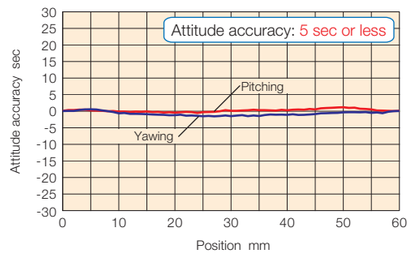

2 ● High speed stability

Speed stability is improved further thanks to smooth-motion Crossed Roller Way, coreless moving magnet type linear motor and high-performance servo driver.

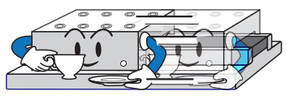

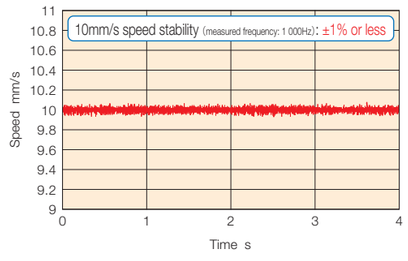

3 ● High running accuracy

High running accuracy as good as less than 1 μm running straightness is realized by precise finishing and assembly of components.

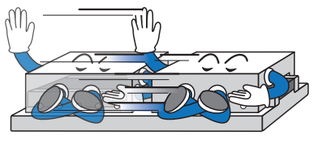

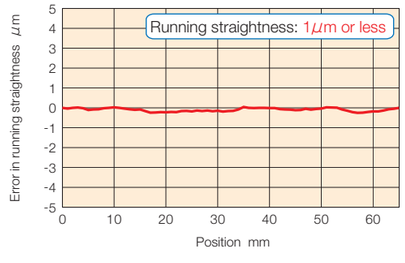

NT···XZ [Pick and place unit]

NT···XZ is a linear motor drive pick and place unit with ultra thin profile with 18mm thickness, realized by integrating X-axis moving table and Z-axis bed, using C-Lube Linear Way ML for miniature linear motion rolling guide in the table guiding parts. By entering a positioning program, you may set flexible operation patterns and change strokes according to works easily.

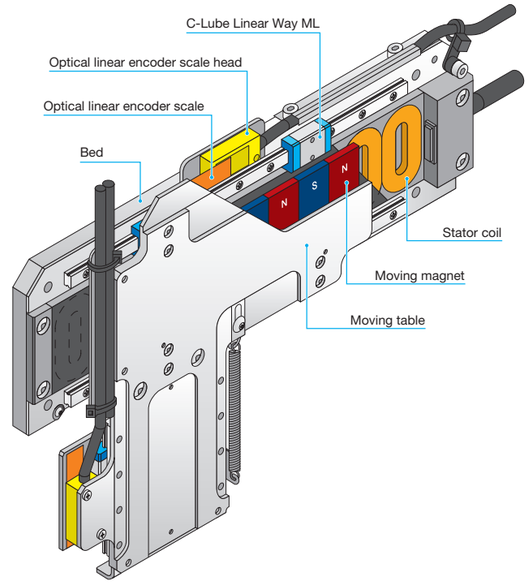

Points

1 ● High-tact positioning

Pick & place unit of unparalleled structure with linear motor drive. Optical linear encoders are installed on both axes to realize accurate and high-tact positioning.

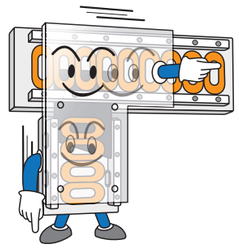

2 ● Ultrathin and space saving

Ultra thin profile of 18mm thickness is realized by integrating X-axis moving table and Z-axis bed. Parallel install of four units in a space of 100mm width is possible, and such space saving arrangement contributes to improvement of efficiency.



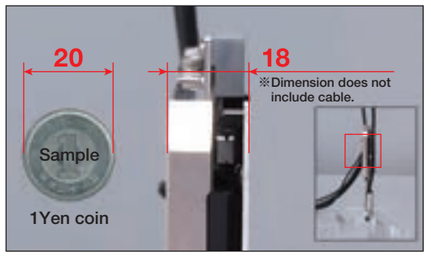

3 ● Operation monitoring function

The track can be verified from PC by using the driver monitoring function.



1N=0.102kgf=0.2248lbs.
1mm=0.03937inch

NT···XZH [High thrust pick and place unit]

NT···XZH is a linear motor drive high thrust pick and place unit with compact integral X- and Z- axis, using C-Lube Linear Way ML for miniature linear motion rolling guide in the table guiding parts. Thanks to adoption of a system to drive moving table by using a link mechanism, it realizes both higher thrust force of the linear motor and weight reduction of the moving parts and reduces tact time. By entering a positioning program, you may set flexible operation patterns and change strokes according to works easily.

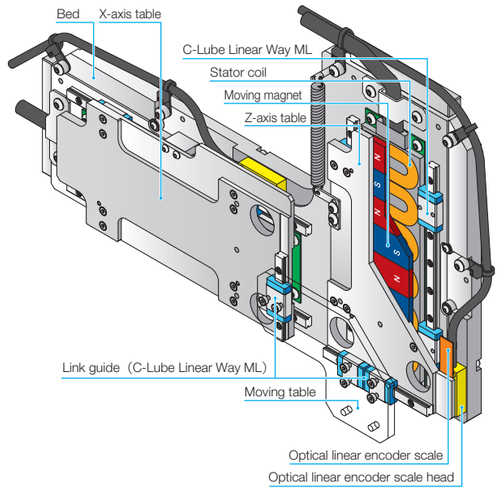

Points

1 ● High thrust and high tact

Thanks to X- and Z-axis motor located on the flat surface and adoption of a system to drive moving table by using a link mechanism, it realizes both higher thrust force of the linear motor and weight reduction of the moving parts and significantly reduces tact time.

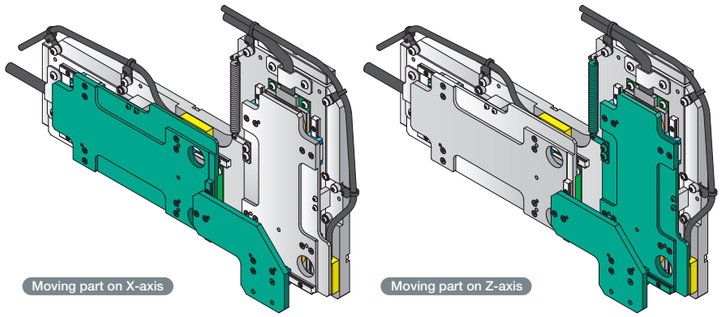

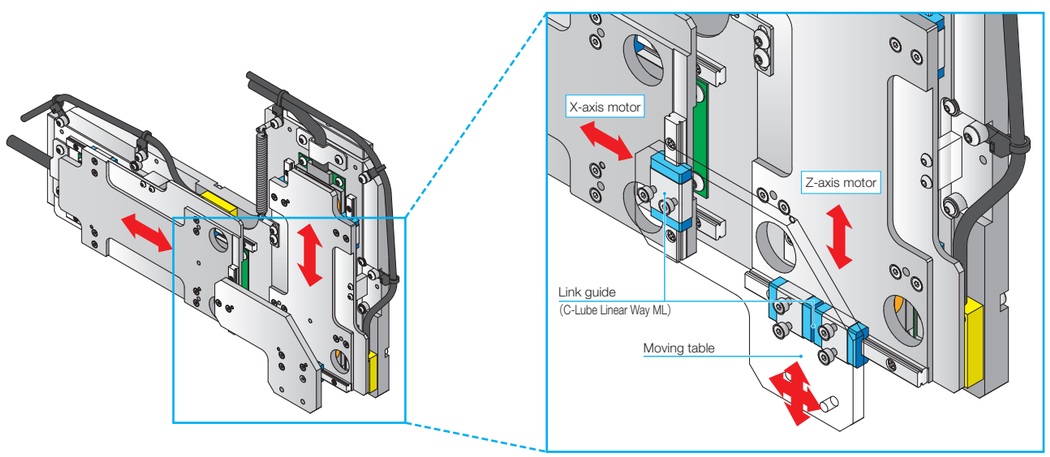

2 ● High resolution and high responsiveness

Performing fully-closed loop control by incorporating an optical linear encoder in both axes enables high resolution and high response.

Measuring condition

NT90XZH2510/5	
Effective thrust force	: X-axis; 14.8 N, Z-axis; 15.7 N
Carrying mass	: 150 g
Stroke	: X-axis; 22 mm, Z-axis; 5 mm
Acceleration / deceleration time	: X-axis; 24 ms, Z-axis; 9 ms

Enables high-speed positioning!

Settling time: 2 ms, Number of cycles: 334 times/min

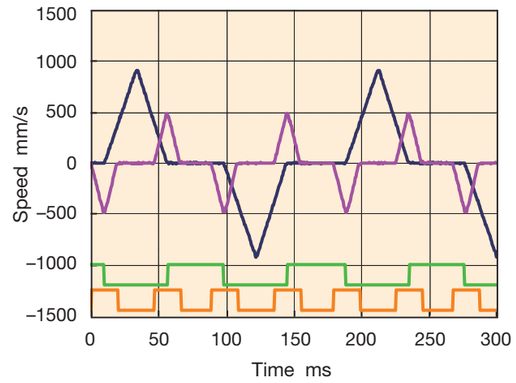

3 ● Air cooling

With the structure that heat-generating coils are converged at the stator, cooling and heat discharge to the mounting base are easy. When the air cooling option is specified, tact time can be shortened further.

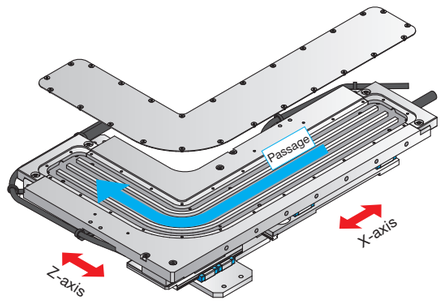

NT90XZH temperature (ambient temperature: 20°C)

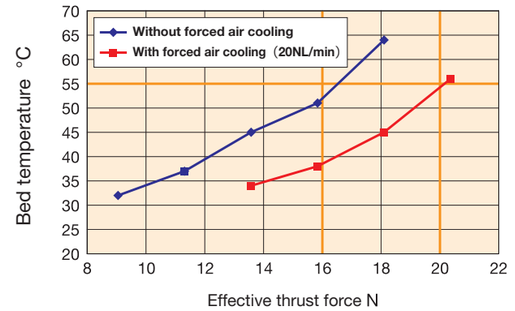

4 ● Cableless moving parts

Though it is multi-axial unit, wiring is easy and higher cleanliness is realized by adopting cableless moving magnet system for the moving parts.

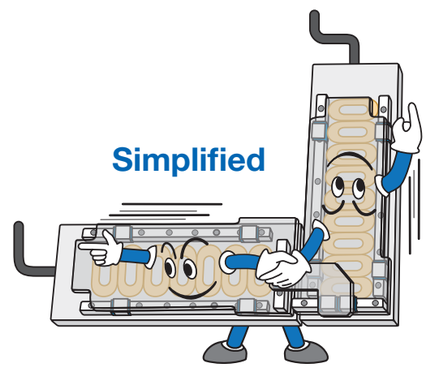

5 ● Operation monitoring function

As with NT···XZ, the track can be verified from PC by using the driver monitoring function.



1N=0.102kgf=0.2248lbs.
1mm=0.03937inch

Identification Number

Example of identification number of NT···V

1	2	1	3		4	5	6	7	8
NT	55	V	25	/	5		L	SC	1

1 Model — Page Ⅱ-245
2 Size — Page Ⅱ-245
3 Stroke length — Page Ⅱ-245
4 Resolution of linear encoder — Page Ⅱ-245
5 Cover — Page Ⅱ-245
6 Cord direction — Page Ⅱ-245
7 Designation of sensor — Page Ⅱ-245
8 Specification number — Page Ⅱ-245

Identification Number and Specification

1 Model
NT···V: Nano Linear NT···V

2 Size
38: Width 38mm
55: Width 55mm
80: Width 80mm

3 Stroke length
10: 10mm (applicable to NT38V)
18: 18mm (applicable to NT38V)
25: 25mm (applicable to NT55V and NT80V)
65: 65mm (applicable to NT55V and NT80V)
120: 120mm (applicable to NT80V)

4 Resolution of linear encoder
1 : 0.1μm
1F: 0.1μm High speed specification (applicable to NT55V and NT80V) When 1F is selected, a system configuration using dedicated driver ADVA is necessary.
5 : 0.5μm

5 Cover
No symbol: Without cover
D: With cover (applicable to NT38V)

6 Cord direction
L : Leftward
R: Rightward
Select from the cord direction indicated in Fig. 1. (direction for pulling out a cord when placing an encoder on the lower side)

7 Designation of sensor
No symbol: Without sensor
SC : With sensor (limit and pre-origin) and sensor bracket
Applicable to NT55V and NT80V
two types of dedicated drivers, ADVA and MR-J4-10B ready for SSCNETⅢ/H, are available for Nano Linear NT55V and NT80V. If MR-J4-10B is used, SC must be selected.

8 Specification number
1: Specification number 1
The specification number is limited to 1.

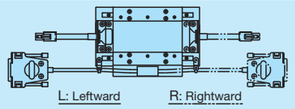

Fig. 1 NT···V cord direction

Identification Number

Example of identification number of NT···H

1	2	1	3		4	5	6
NT	88	H	65	/	05	R	1

1 Model — Page Ⅱ-246
2 Size — Page Ⅱ-246
3 Stroke length — Page Ⅱ-246
4 Resolution of linear encoder — Page Ⅱ-246
5 Cord direction — Page Ⅱ-246
6 Specification number — Page Ⅱ-246

Identification Number and Specification

1 Model
NT···H: Nano Linear NT···H

2 Size
88: Width 88mm

3 Stroke length
25: 25mm
65: 65mm

4 Resolution of linear encoder
01: 0.01μm
05: 0.05μm

5 Cord direction
L : Leftward
R: Rightward
Select from the direction indicated in Fig. 2. (direction for pulling out a cord when placing an encoder on the lower side)

6 Specification number
1 : Specification number 1
The specification number is limited to 1.

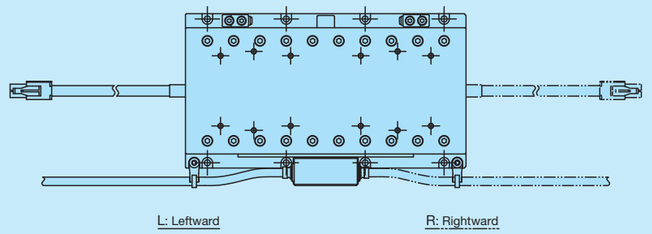

Fig. 2 NT88H cord direction

1N=0.102kgf=0.2248lbs.
1mm=0.03937inch

Identification Number

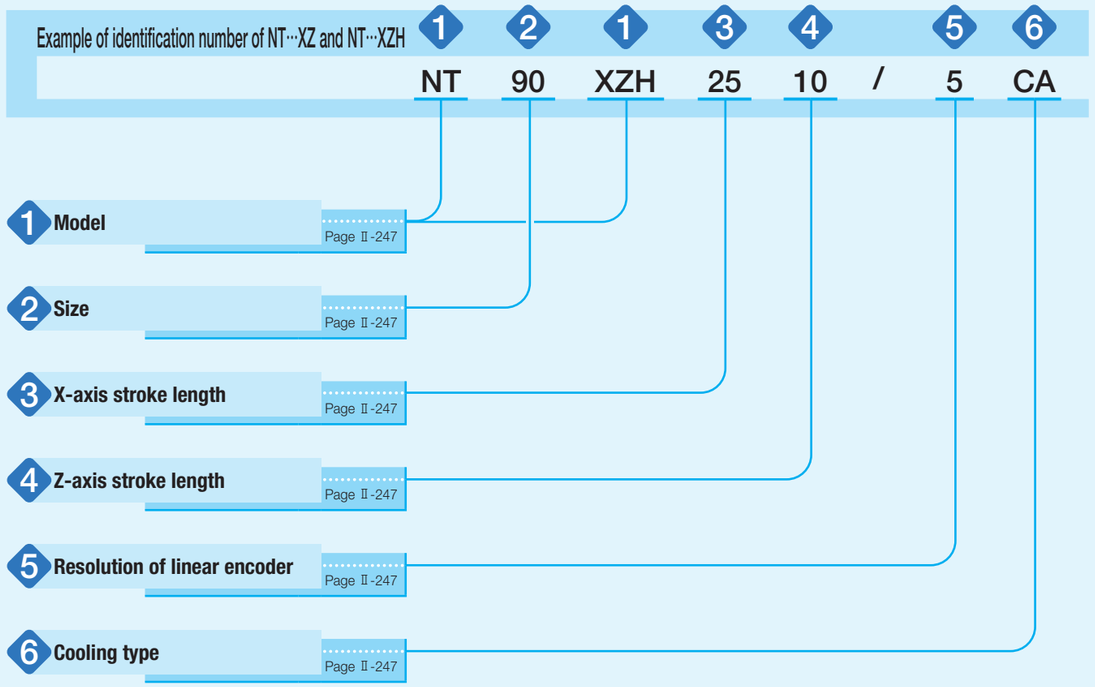

Identification Number and Specification

1 Model

NT···XZ : Nano Linear NT···XZ
NT···XZH: Nano Linear NT···XZH, high thrust type

2 Size

80: Z-axis width of 80mm (applicable to NT···XZ)
90: Z-axis width of 90mm (applicable to NT···XZH)

3 X-axis stroke length

25: 25mm (applicable to NT···XZH)
45: 45mm (applicable to NT···XZ)

4 Z-axis stroke length

10: 10mm

5 Resolution of linear encoder

1 : 0.1μm
1F: 0.1μm High speed specification
5 : 0.5μm

6 Cooling type

No symbol: Natural air cooling
CA : Air cooling (applicable to NT···XZH)

Specifications

Table 1 Specification / Performance of NT38V

Item \ Model and size		NT38V10		NT38V18	
Maximum thrust(1)	N	3			
Rated thrust(2)	N	0.6		0.8	
Maximum load mass	kg	0.5			
Effective stroke length	mm	10		18	
Resolution	μm	0.1	0.5	0.1	0.5
Maximum speed	mm/s	270	500	270	500
Positioning repeatability(3)	μm	±0.5			
Mass of moving table	kg	0.036 (with cover 0.040)		0.048 (with cover 0.052)	
Total mass(4)	kg	0.190 (with cover 0.198)		0.230 (with cover 0.239)	
Ambient temperature and humidity in operation		0~40℃ · 20~80%RH (keep dewdrop free)			

Notes (1) The duration of maximum thrust is up to 1 second.
(2) This is based on the case of mounting on a metal mating member material at an ambient temperature of 20℃.
(3) When the temperature of the product is constant.
(4) Mass of the cord is not included.

Table 2 Specification / Performance of NT55V

Item \ Model and size		NT55V25			NT55V65		
Maximum thrust(1)	N	25					
Rated thrust(2)	N	7					
Maximum load mass	kg	5					
Effective stroke length	mm	25			65		
Resolution	μm	0.1		0.5	0.1		0.5
Maximum speed	mm/s	270	1 000(5)	1 300	270	1 000(5)	1 300
Positioning repeatability(3)	μm	±0.5					
Mass of moving table	kg	0.17			0.17		
Total mass(4)	kg	0.42			0.5		
Ambient temperature and humidity in operation		0~40℃ · 20~80%RH (keep dewdrop free)					

Notes (1) The duration of maximum thrust is up to 1 second.
(2) This is based on the case of mounting on a metal mating member material at an ambient temperature of 20℃.
(3) When the temperature of the product is constant.
(4) Mass of the cord is not included.
(5) Applicable to high speed specification.

Table 3 Specification / Performance of NT80V

Item \ Model and size		NT80V25			NT80V65			NT80V120		
Maximum thrust(1)	N	36								
Rated thrust(2)	N	8								
Maximum load mass	kg	5								
Effective stroke length	mm	25			65			120		
Resolution	μm	0.1		0.5	0.1		0.5	0.1		0.5
Maximum speed	mm/s	270	1 000(5)	1 300	270	1 000(5)	1 300	270	1 000(5)	1 300
Positioning repeatability(3)	μm	±0.5								
Mass of moving table	kg	0.28			0.28			0.47		
Total mass(4)	kg	0.68			0.83			1.4		
Ambient temperature and humidity in operation		0~40℃ · 20~80%RH (keep dewdrop free)								

Notes (1) The duration of maximum thrust is up to 1 second.
(2) This is based on the case of mounting on a metal mating member material at an ambient temperature of 20℃.
(3) When the temperature of the product is constant.
(4) Mass of the cord is not included.
(5) Applicable to high speed specification.

1N=0.102kgf=0.2248lbs.
1mm=0.03937inch

Specifications

Table 4 Specification / Performance of NT···H

Item \ Model and size		NT88H25		NT88H65	
Maximum thrust(1)	N	25			
Rated thrust(2)	N	5			
Maximum load mass	kg	5			
Effective stroke length	mm	25		65	
Resolution	μm	0.01	0.05	0.01	0.05
Maximum speed	mm/s	90	400	90	400
Positioning accuracy (3)	μm	1			
Positioning repeatability(4)	μm	±0.1			
Parallelism in motion A	μm	5			
Attitude accuracy(5)	Sec	5			
Straightness in vertical and straightness in horizontal	μm	1			
Mass of moving table	kg	0.7		0.9	
Total mass(6)	kg	1.6		2	
Ambient temperature and humidity in operation		0~40℃ · 20~80%RH (keep dewdrop free)			

Notes (1) The duration of maximum thrust is up to 1 second.
(2) This is based on the case of mounting on a metal mating member material at an ambient temperature of 20℃.
(3) The value is for the temperature of ambient and product being 20℃.
(4) When the temperature of the product is constant.
(5) This represents accuracy in pitching and yawing.
(6) Mass of the cord is not included.

Table 5 Specification / Performance of NT···XZ and NT···XZH

Item \ Model and size		NT80XZ4510				NT90XZH2510			
		X-axis		Z-axis		X-axis		Z-axis	
Maximum thrust(1)	N	50		25		70			
Rated thrust(2)	N	10		2.5		Natural air cooling: 16		Air cooling(3) : 20	
Maximum load mass	kg	0.1				0.2			
Effective stroke length	mm	45		10		25		10	
Resolution	μm	0.1	0.5	0.1	0.5	0.1	0.5	0.1	0.5
Maximum speed	mm/s	270	1 000(7)	1 300	800(7)	270	1 000(7)	1 300	270	1 000(7)	1 000
Positioning repeatability(4)	μm	±0.5				±0.5			
Mass of moving table	kg	0.6(5)		0.12		0.38		0.35	
Total mass(6)	kg	1.6				2.8			
Ambient temperature and humidity in operation		0~40℃ · 20~80%RH (keep dewdrop free)							

Notes (1) The duration of maximum thrust is up to 1 second.
(2) This is based on the case of mounting on a metal mating member material at an ambient temperature of 20℃.
(3) This is under air flow of 20NL/min.
(4) When the temperature of the product is constant.
(5) Mass of moving table of Z-axis is included.
(6) Mass of the cord is not included.
(7) Applicable to high speed specification.

■ Thrust characteristics of NT···V

NT38V

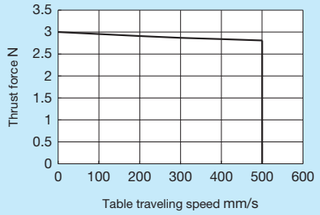

Fig. 3 Thrust characteristic of NT38V

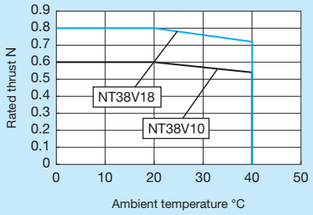

Fig. 4 Rated thrust characteristic of NT38V

Remark: This is a case when mounting on a metal mating member material.

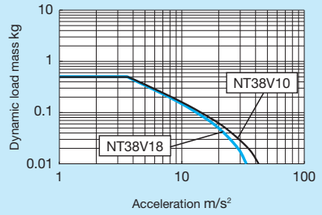

Fig. 5 Dynamic load mass of NT38V

Remark: This is a value calculated based on the thrust force with table moving speed set to 500mm/s.

NT55V

● Use with driver ADVA-01NL or MR-J4

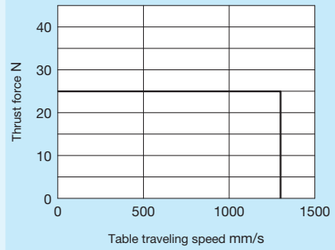

Fig. 6 Thrust characteristic of NT55V

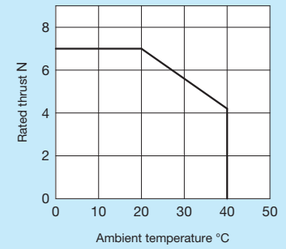

Fig. 7 Rated thrust characteristic of NT55V

Remark: This is a case when mounting on a metal mating member material.

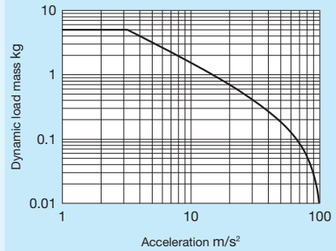

Fig. 8 Dynamic load mass of NT55V

Remark: This is a value calculated based on the thrust force with table moving speed set to 500mm/s.

● Use with driver ADVA-R5ML

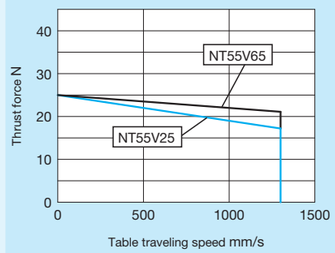

Fig. 9 Thrust characteristic of NT55V

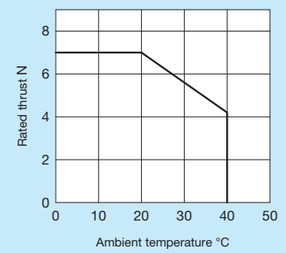

Fig. 10 Rated thrust characteristic of NT55V

Remark: This is a case when mounting on a metal mating member material.

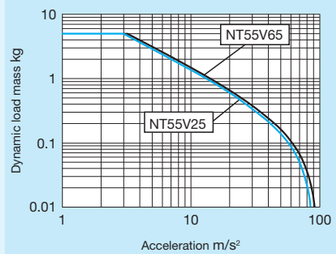

Fig. 11 Dynamic load mass of NT55V

Remark: This is a value calculated based on the thrust force with table moving speed set to 500mm/s.

NT80V

● Use with driver ADVA-01NL or MR-J4

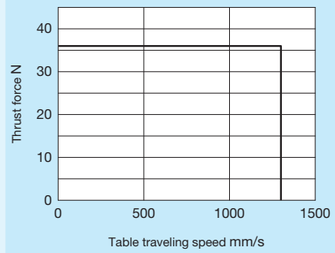

Fig. 12 Thrust characteristic of NT80V

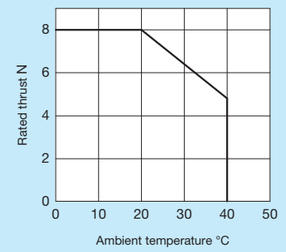

Fig. 13 Rated thrust characteristic of NT80V

Remark: This is a case when mounting on a metal mating member material.

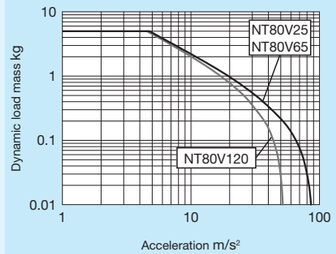

Fig. 14 Dynamic load mass of NT80V

Remark: This is a value calculated based on the thrust force with table moving speed set to 500mm/s.

● Use with driver ADVA-R5ML

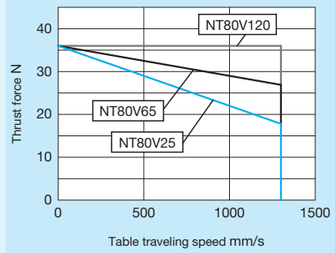

Fig. 15 Thrust characteristic of NT80V

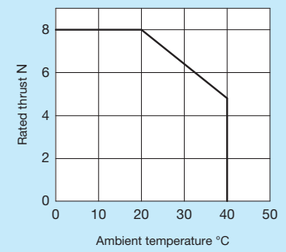

Fig. 16 Rated thrust characteristic of NT80V

Remark: This is a case when mounting on a metal mating member material.

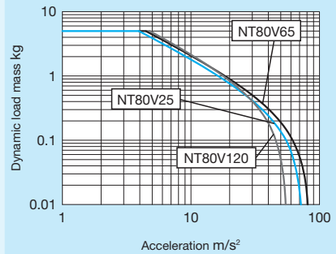

Fig. 17 Dynamic load mass of NT80V

Remark: This is a value calculated based on the thrust force with table moving speed set to 500mm/s.

1N=0.102kgf=0.2248lbs.
1mm=0.03937inch

■ Thrust characteristics of NT···H

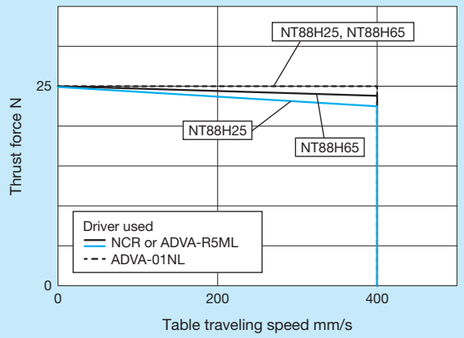

Fig. 18 Thrust characteristic of NT88H

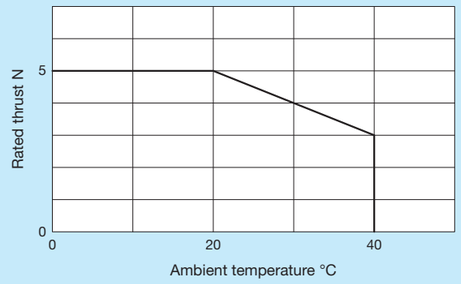

Fig. 19 Rated thrust characteristic of NT88H

Remark: This is a case when mounting on a metal mating member material.

■ Thrust characteristics of NT···XZ and NT···XZH

● Use with driver ADVA-01NL

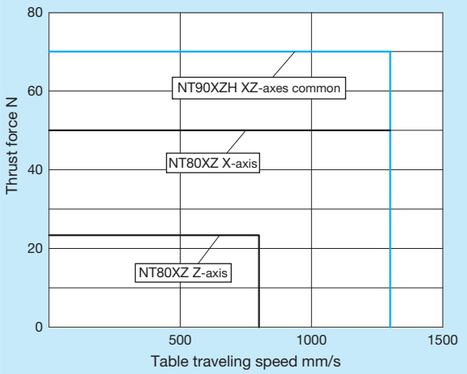

Fig. 20 Thrust characteristics of NT···XZ and NT···XZH

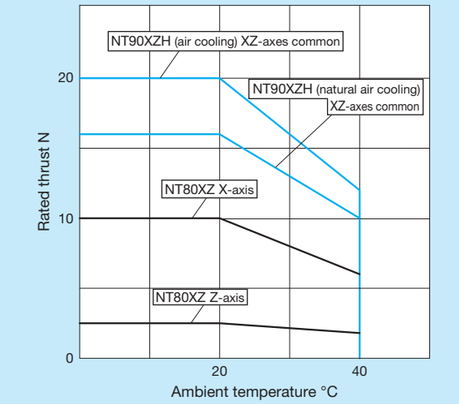

Fig. 21 Rated thrust characteristics of NT···XZ and NT···XZH

Remark: This is a case when mounting on a metal mating member material.

● Use with driver ADVA-R5ML

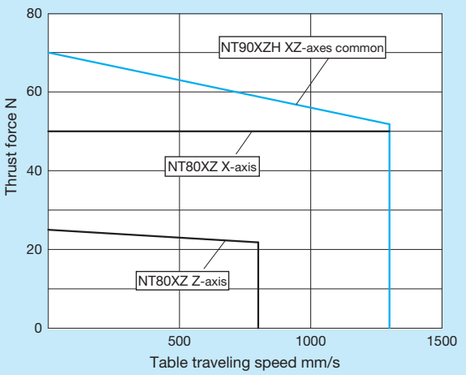

Fig. 22 Thrust characteristics of NT···XZ and NT···XZH

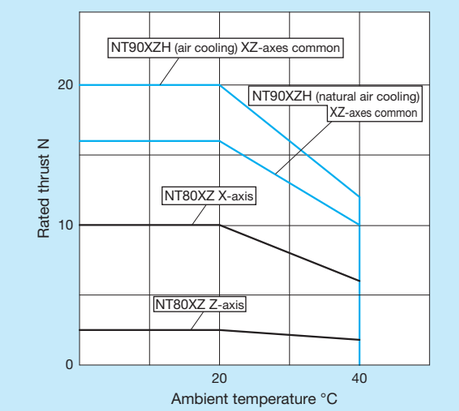

Fig. 23 Rated thrust characteristics of NT···XZ and NT···XZH

Remark: This is a case when mounting on a metal mating member material.

Mounting

For the processing accuracy of the Precision Positioning Table mounting surface and the tightening torque of the fixing screws, see page Ⅲ-29.

Sensor Specification

Table 6 Sensor timing chart for NT55V/SC and NT80V/SC

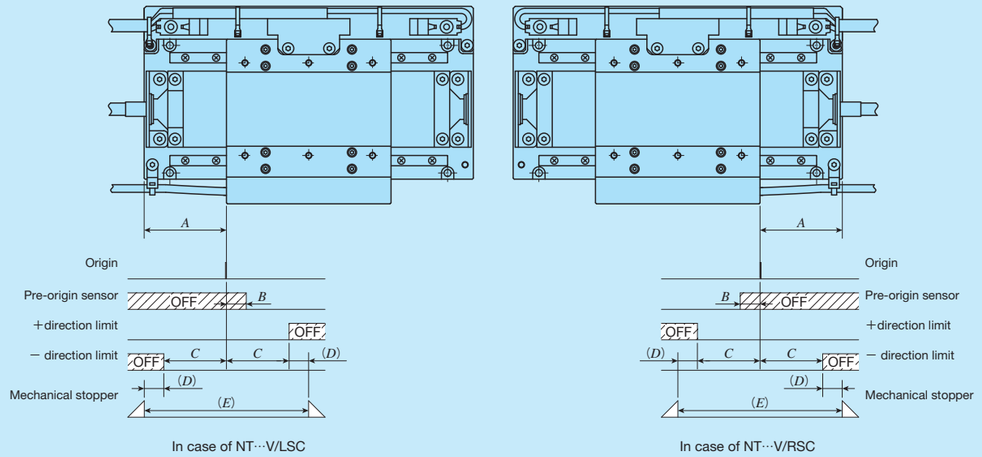

unit: mm

Model and size	A	B(1)	C(1)	D(1)	E(1)
NT55V 25/SC	20	4	12.5	3	31
NT55V 65/SC	40	4	32.5	3	71
NT80V 25/SC	20	4	12.5	3	31
NT80V 65/SC	40	4	32.5	3	71
NT80V120/SC	70	4	60	5.5	131

Note (1) Respective values are for reference and are not guaranteed values.
For detailed dimensions, please contact IKO.

Remark: For the specifications of respective sensors, please see the section of sensor specification in General Explanation.

● NT···V, NT···XZ and NT···XZH do not have a built-in sensor

Return to origin operation in a system configuration using driver ADVA and the system configuration for NT38V is conducted by external input. In the return to origin operation, the moving table turns around after contacting the mechanical stopper, and then stops at the origin position. Since, however, a limit sensor and a pre-origin sensor can be mounted on NT55V and NT80V with a supplemental signal (/SC), the return to origin operation using each sensor is also possible.
Forward / backward direction limit detection in a system configuration using the driver ADVA is performed by driver's software limit function. The stroke range can be set by parameters for driver. In addition, the software limit function is only enabled in position control mode and return to origin must be completed. In case of speed control mode and thrust force control mode, mount an external sensor.

1N=0.102kgf=0.2248lbs.
1mm=0.03937inch

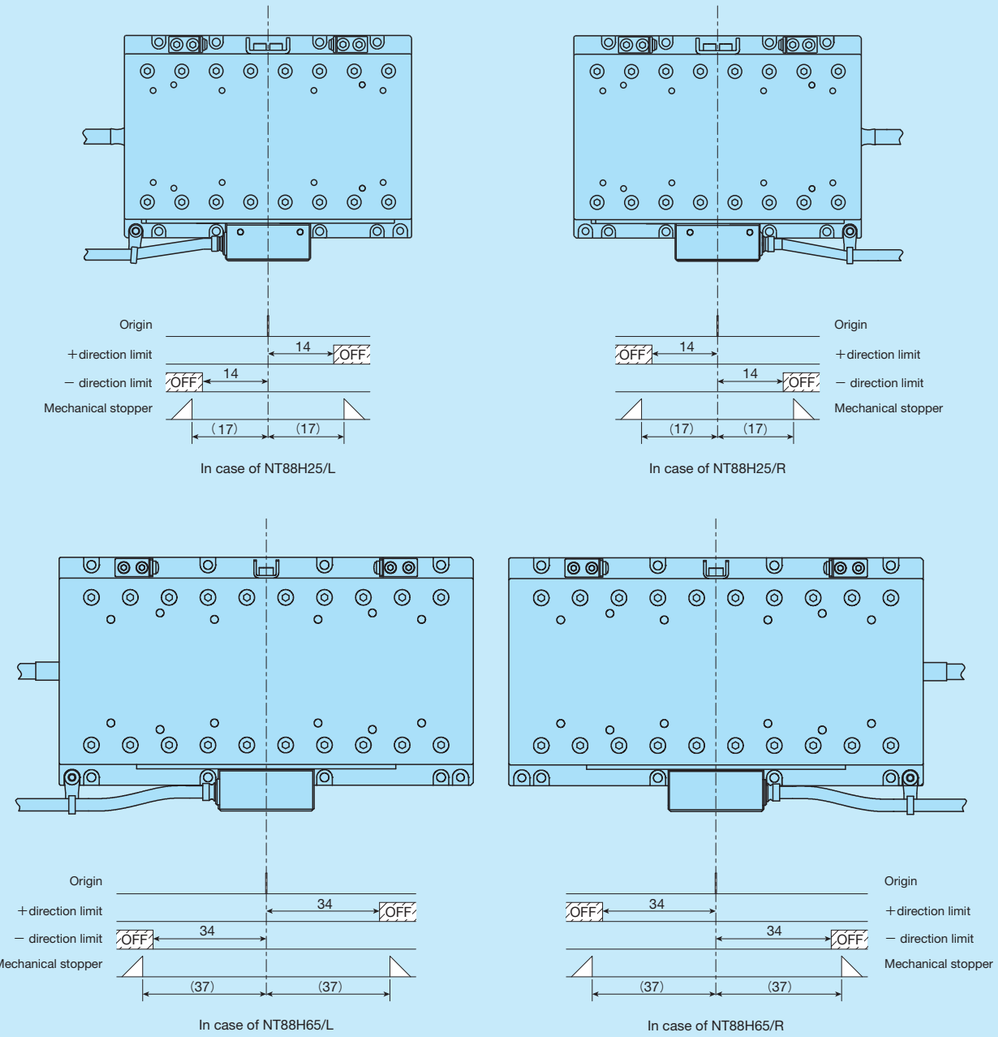

Fig. 24 Sensor timing chart for NT88H

Note (1) Respective values are for reference and are not guaranteed values.
For detailed dimensions, please contact IKO.

Remarks 1. For return to origin operation in a standard system configuration, use the return to origin function (limit inversion method) of the driver. It is necessary to input the limit signal output from the encoder interface to the driver.
2. Pre-origin sensor is not provided.
3. For the specifications of respective sensors, please see the section of sensor specification in General Explanation.

System Configuration

■ System configuration for NT38V

There are dedicated drivers for Nano Linear NT38V, and the system configuration is shown in Table 7. For detailed driver specifications, see the driver specification section on page Ⅱ-359. Please contact IKO if the use of other drivers is required. When you place an order, please specify desired identification numbers from the list of Table 7.

Table 7 System configuration for NT38V

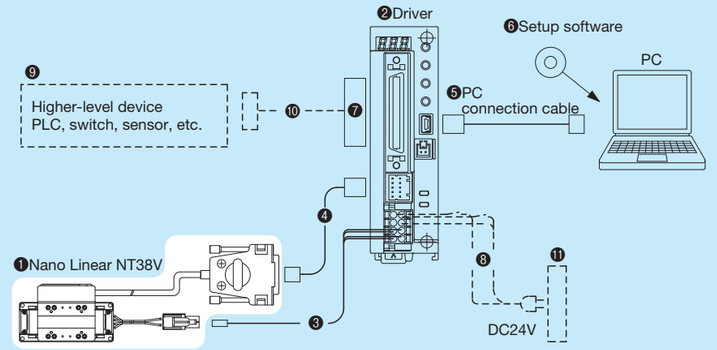

No.	Name	Identification number
❶	Nano Linear NT···V	NT38V
❷	Driver	MR-J4-03A6-NL156J154 (NT38V10) MR-J4-03A6-NL156J155 (NT38V18)
❸	Motor extension cord (3m(1))	TAE20W2-AM03
❹	Encoder extension cord (2m(1))	TAE20W3-EC02
❺	PC connection cable (3m)	MR-J3USBCBL3M
❻	Setup software	SW1DNC-MRC2-J
❼	Connectors for input & output signal	TAE20R5-CN (2)
❽	Power cord	This must be prepared by customer.
❾	Higher-level device, Sensor (3)	
❿	Higher-level device, Sensor connection cord (3)	
⓫	DC24V power supply	

Notes (1) For specific cord length, please contact IKO.
(2) Connectors for input & output signal TAE20R5-CN is a combined product of 10150-3000PE (connector) and 10350-52F0-008 (cover) from 3M Japan Limited.
(3) Depending on the higher-level device connected, a sensor may be required for return to origin. For details, contact IKO.

1N=0.102kgf=0.2248lbs.
1mm=0.03937inch

■ System configuration for Nano Linear NT (excluding NT38V)

There are dedicated drivers for each model of the Nano Linear NT (excluding NT38V), and the system configuration varies depending on the driver used. Table 8 shows the applicability of Nano Linear models and driver types. Table 9 shows the example of identification number for ADVA, and Table 10 shows the tables and model number of the applicable MR-J4. For detailed driver specifications, see the driver specifications on pages Ⅱ-360 to Ⅱ-363.
Please also note that the drivers compatible with MECHATROLINK will be prepared upon request. If needed, please contact IKO.

Table 8 Applicability table of Nano Linear models and driver types

Driver	Command type	Nano Linear model				
		NT55V	NT80V	NT88H	NT80XZ	NT90XZH
ADVA	Pulse train command	○	○	○	○	○
	EtherCAT	○	○	○	○	○
MR-J4	SSCNETⅢ/H	○(1)	○(1)	—	—	—
NCR	Pulse train command	—	—	○	—	—

Note (1) Only compatible with sensor-included specification / SC.
Remark: Please contact IKO if the use of non-applicable drivers is required.

Table 9 Model number for ADVA

ADVA – 01NL EC / NT55V25
① Model ② ③ ④

② Power supply voltage	
01NL	Single-phase / Three-phase 200 V
R5ML	Single-phase 100 V

③ Command type	
No symbol	Pulse train command
EC	EtherCAT

④ Applicable Nano Linear model	
NT55V 25	NT55V 25
NT55V 65	NT55V 65
NT80V 25	NT80V 25
NT80V 65	NT80V 65
NT80V120	NT80V120
NT88H 25	NT88H 25
NT88H 65	NT88H 65
NT80XZ-X	NT80XZ X-axis
NT80XZ-Z	NT80XZ Z-axis
NT90XZH	For both NT90XZH X-axis and Z-axis

Table 10 Nano Linear NT55V, NT80V and model number of applicable MR-J4

Model number of table	Model number of driver
NT55V 25	MR-J4-10B-RJ/NT55V25
NT55V 65	MR-J4-10B-RJ/NT55V65
NT80V 25	MR-J4-10B-RJ/NT80V25
NT80V 65	MR-J4-10B-RJ/NT80V65
NT80V120	MR-J4-10B-RJ/NT80V120

Remark: MR-J4-10B is only applicable to sensor-included specification / SC.

Table 11 System configuration for NT55V, NT80V with driver ADVA

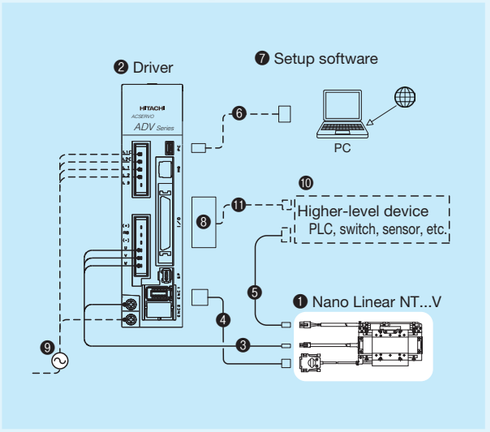

No.	Name	Model and size
❸	Motor extension cord (3m) (1)	TAE20V3-AM03
❹	Encoder extension cord (2m) (1)	TAE20V4-EC02
❺	Sensor extension cord (2)	TAE10V8-LC□□
❻	PC connection cable	USB mini B cable This must be prepared by customer.
❼	Setup software	ProDriveNext Please download from the official website of Hitachi Industrial Equipment Systems Co., Ltd.
❽	I/O connector	TAE20R5-CN (3)
❾	Power cord	This must be prepared by customer.
❿	Higher-level device	
⓫	I/O connector connection cable	

Notes (1) For specific cord length, please contact IKO.
(2) The lengths of the sensor extension cord is specified in the fields of □□ located at the end of the identification number with a length from 3 to 10m in units of 1m.
(3) I/O connector TAE20R5-CN is a combined product of 10150-3000PE (connector) and 10350-52F0-008 (cover) from 3M Japan Limited.

Table 12 System configuration for NT55V, NT80V with driver ADVA···EC

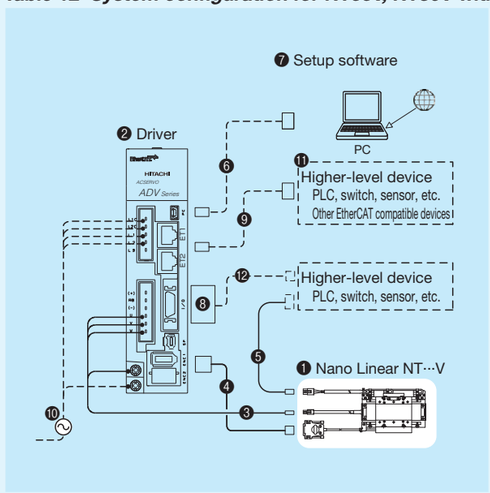

No.	Name	Model and size
❸	Motor extension cord (3m) (1)	TAE20V3-AM03
❹	Encoder extension cord (2m) (1)	TAE20V4-EC02
❺	Sensor extension cord (2)	TAE10V8-LC□□
❻	PC connection cable	USB mini B cable This must be prepared by customer.
❼	Setup software	ProDriveNext Please download from the official website of Hitachi Industrial Equipment Systems Co., Ltd.
❽	I/O connector	TAE20V5-CN (3)
❾	Ethernet cable	This must be prepared by customer.
❿	Power cord	
⓫	Higher-level device	
⓬	I/O connector connection cable	

Notes (1) For specific cord length, please contact IKO.
(2) The lengths of the sensor extension cord is specified in the fields of □□ located at the end of the identification number with a length from 3 to 10m in units of 1m.
(3) I/O connector TAE20V5-CN is a combined product of 10120-3000PE (connector) and 10320-52F0-008 (cover) from 3M Japan Limited.

Table 13 System configuration for NT55V and NT80V with driver MR-J4-10B (SSCNET Ⅲ/H compatible)

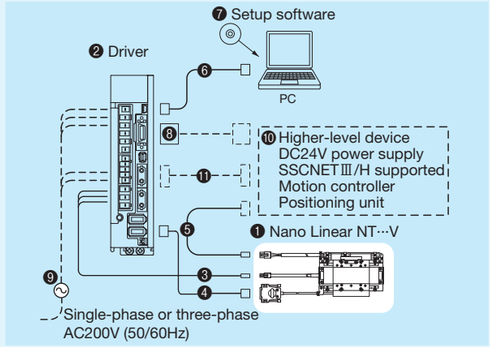

No.	Name	Identification Number
❸	Motor extension cord (3m) (1)	TAE20V3-AM03
❹	Encoder extension cord (2m) (1)	TAE20V6-EC02
❺	Sensor extension cord (2)	TAE10V8-LC□□
❻	PC connection cable (3m)	MR-J3USBCBL3M
❼	Setup software	SW1DNC-MRC2-J
❽	I/O connection connector	MR-CCN1 (3)
❾	Power cord	This must be prepared by customer.
❿	Higher-level device (4)	
⓫	SSCNETⅢ/H connection cable	

Notes (1) For specific cord length, please contact IKO.
(2) The lengths of the sensor extension cord is specified in the fields of □□ located at the end of the identification number with a length from 3 to 10m in units of 1m.
(3) Connectors for input/output connection MR-CCN1 is a combined product of 10120-3000PE (connector) and 10320-52F0-008 (cover) from 3M Japan Limited.
(4) The higher-level devices are a motion controller, positioning unit and DC24V power supply ready for SSCNETⅢ/H from Mitsubishi Electric Corporation.

System configuration

Table 14 System configuration for NT88H with driver NCR

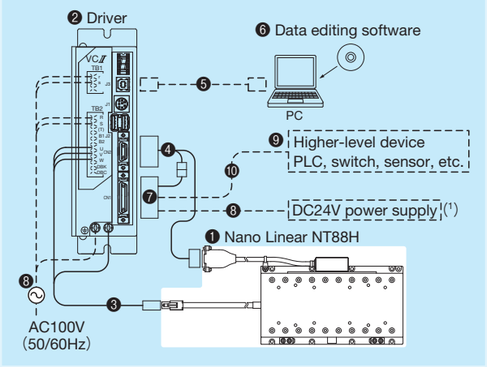

No.	Name	Model number
❶	Nano Linear NT···H	NT88H
❷	Driver	NCR-DDA0A1A-051D-T08
❸	Motor extension cord (3m) (2)	TAE20T8-AM03
❹	Encoder extension cord (2m) (2)	TAE20T9-EC02
❺	PC connection cable	This must be prepared by customer. USB cable A plug - B plug
❻	Data editing software	NCR-XCR000-S135
❼	Connector set	TAE20U0-CN (3)
❽	Power cord	This must be prepared by customer.
❾	Higher-level device	
❿	I/O connector connection cable	

Notes (1) DC24V power supply must be prepared separately by customer.
(2) For specific cord length, please contact IKO.
(3) The connector set TAE20U0-CN is a set of I/O connector and connector for sensor (crimp wired (200mm)).
The I/O connector is a combined product of 10136-3000PE (connector) and 10336-52F0-008 (cover) from 3M Japan Limited.
The connector for sensor is a combined product of 170365-1 (contact) and 172157-1 (housing) from Tyco Electronics Japan G.K..

Table 15 System configuration for NT88H with driver ADVA

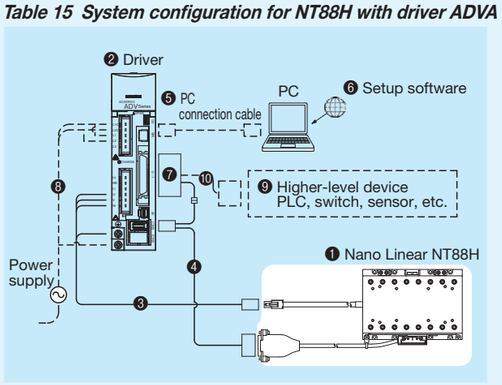

No.	Name	Identification number
❸	Motor extension cord	TAE20V3-AM03（3m）(1)
❹	Encoder extension cord	TAE20W5-EC02（2m）(1)
❺	PC connection cable	USB mini B cable This must be prepared by the customer.
❻	Setup software	ProDriveNext Please download from the official website of Hitachi Industrial Equipment Systems Co., Ltd.
❼	Connector set	TAE20W6-CN (2)
❽	Power cord	This must be prepared by the customer.
❾	Higher-level device	
❿	I/O connector connection cable	

Notes (1) For specific cord length, please contact IKO.
(2) The connector set TAE20W6-CN is a set of I/O connector and connector for sensor (crimp wired (200mm)).
The I/O connector is a combined product of 10150-3000PE (connector) and 10350-52F0-008 (cover) from 3M Japan Limited.
The connector for sensor is a combined product of 170365-1 (contact) and 172157-1 (housing) from Tyco Electronics Japan G.K..

Table 16 System configuration for NT88H with driver ADVA···EC

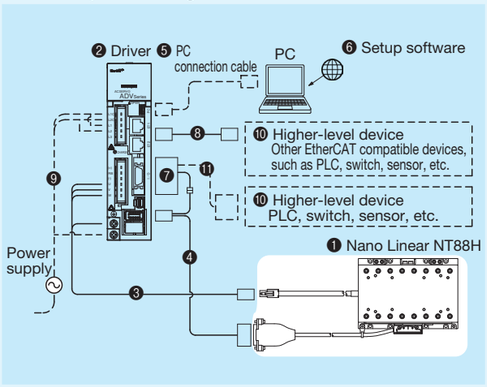

No.	Name	Identification number
❸	Motor extension cord	TAE20V3-AM03（3m）(1)
❹	Encoder extension cord	TAE20W5-EC02（2m）(1)
❺	PC connection cable	USB mini B cable This must be prepared by the customer.
❻	Setup software	ProDriveNext Please download from the official website of Hitachi Industrial Equipment Systems Co., Ltd.
❼	Connector set	TAE20W7-CN (2)
❽	Ethernet cable	This must be prepared by the customer.
❾	Power cord	
❿	Higher-level device	
⓫	I/O connector connection cable	

Notes (1) For specific cord length, please contact IKO.
(2) The connector set TAE20W7-CN is a set of I/O connector and connector for sensor (crimp wired (200mm)).
The I/O connector is a combined product of 10120-3000PE (connector) and 10320-52F0-008 (cover) from 3M Japan Limited.
The connector for sensor is a combined product of 170365-1 (contact) and 172157-1 (housing) from Tyco Electronics Japan G.K..

Table 17 System configuration for NT80XZ, NT90XZH

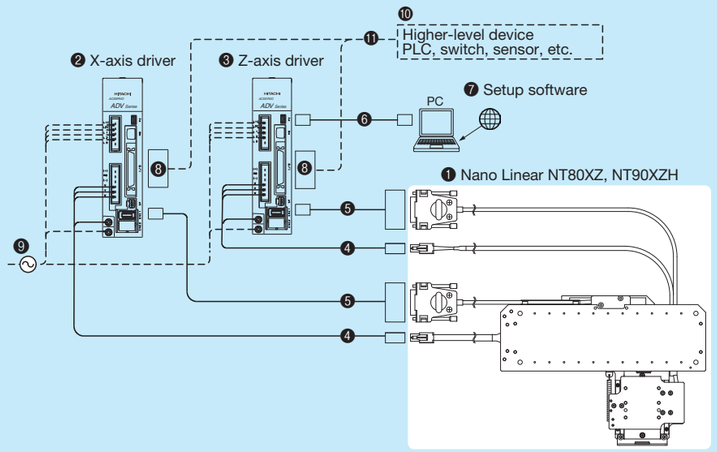

No.	Name	数量	Model and size	
❶	Nano Linear NT80XZ, NT90XZH	1	NT80XZ4510	NT90XZH2510
❷	Driver for X-axis	1	ADVA-01NL/NT80XZ-X (200 V specs) ADVA-R5ML/NT80XZ-X (100 V specs)	ADVA-01NL/NT90XZH (200 V specs) ADVA-R5ML/NT90XZH (100 V specs)
❸	Driver for Z-axis	1	ADVA-01NL/NT80XZ-Z (200 V specs) ADVA-R5ML/NT80XZ-Z (100 V specs)	ADVA-01NL/NT90XZH (200 V specs) ADVA-R5ML/NT90XZH (100 V specs)
❹	Motor extension cord（3m）(1)	2	TAE20V3-AM03	
❺	Encoder extension cord（2m）(1)	2	TAE20V4-EC02	
❻	PC connection cable	1	USB mini B cable (This must be prepared by customer.)	
❼	Setup software	1	ProDriveNext Please download from the official website of Hitachi Industrial Equipment Systems Co., Ltd.	
❽	I/O connector	2	TAE20R5-CN (2)	
❾	Power cord	–	This must be prepared by customer.	
❿	Higher-level device	–		
⓫	I/O connector connection cable	–		

Notes (1) For specific cord length, please contact IKO.
(2) I/O connector TAE20R5-CN is a combined product of 10150-3000PE (connector) and 10350-52F0-008 (cover) from 3M Japan Limited.

● Setup software, data editing software

To operate Nano Linear NT, initial setting of driver parameters is required. Parameter setting for driver is performed using the setup software or data editing software.
In the driver, the setup software (or data editing software) and PC connection cable are not provided. These can be shared in plural drivers but at least 1 set is required. Please prepare these on your own or place an order separately according to your requirement.

1N=0.102kgf=0.2248lbs.
1mm=0.03937inch

Example Operation Pattern

■ Example operation pattern of NT···XZ pick and place

Described below is a representative example of operation pattern of pick and place.

Table 16 Operational conditions

Item		Operational conditions
Carrying mass	g	50
X-axis travel distance	mm	28
Z-axis travel distance	mm	8
Rest time in P1 and P2	s	0.09
1 cycle time	s	0.4
X-axis effective thrust force	N	8.9
Z-axis effective thrust force	N	2.5

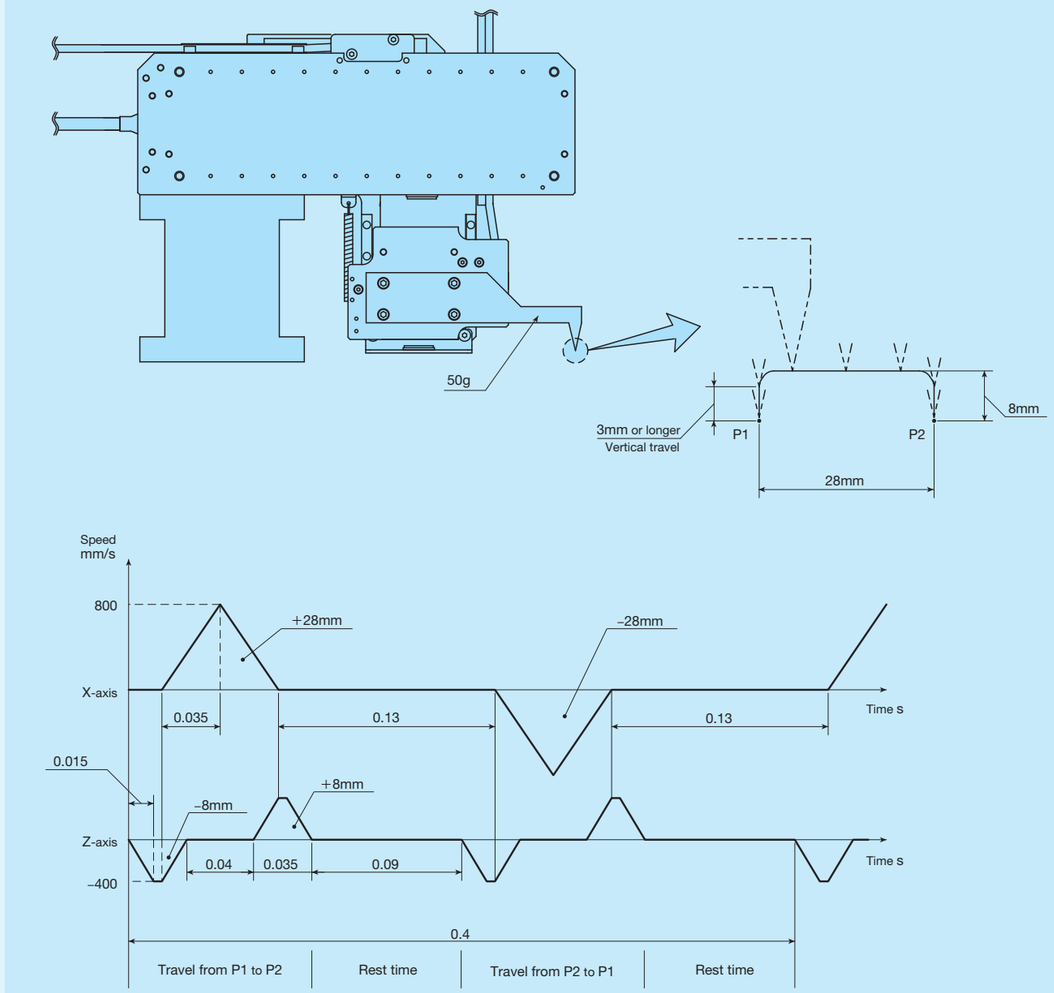

Remark: The speed pattern diagram shows a program pattern, not actual motions.

NT38V10

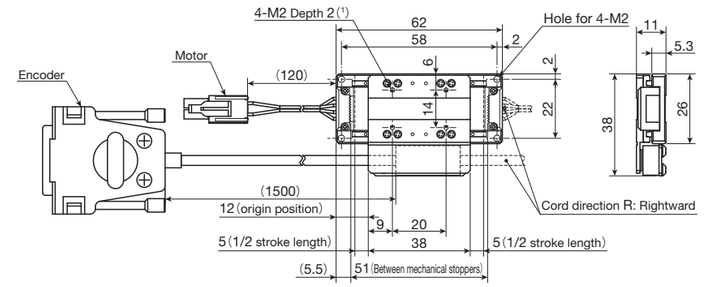

NT38V18

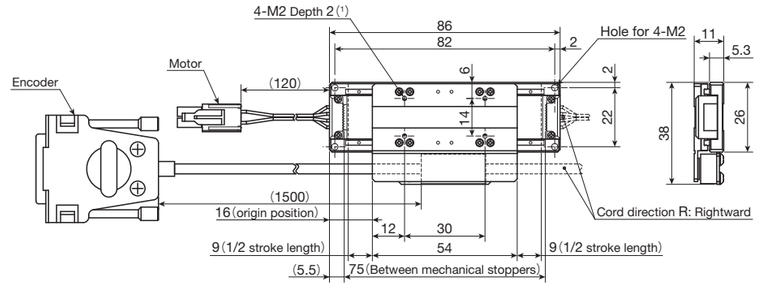

NT38V10/D

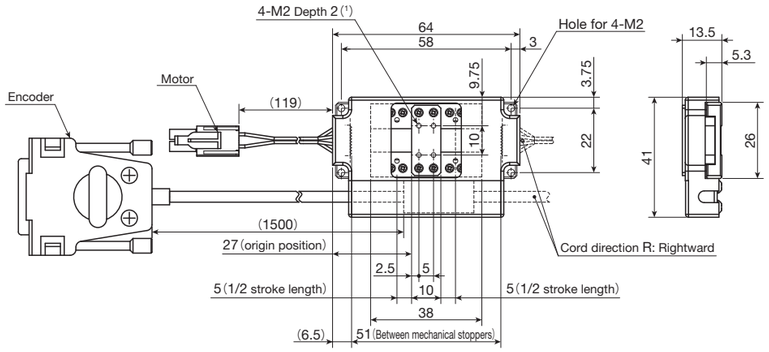

NT38V18/D

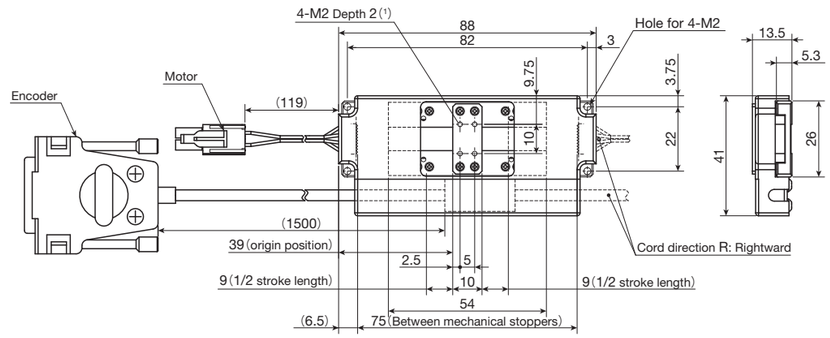

Note (1) Too deep insertion depth of the mounting bolt may affect the running performance of the moving table, so never insert a bolt longer than the depth of the through hole.

1N=0.102kgf=0.2248lbs.
1mm=0.03937inch

NT55V25

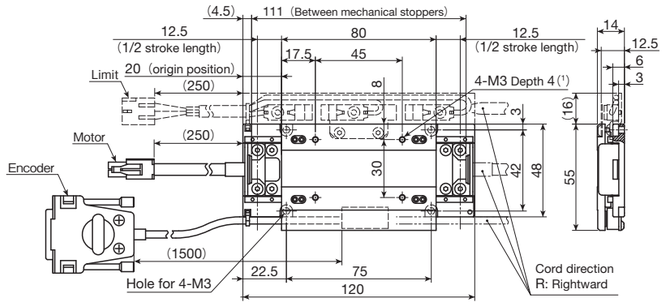

NT55V65

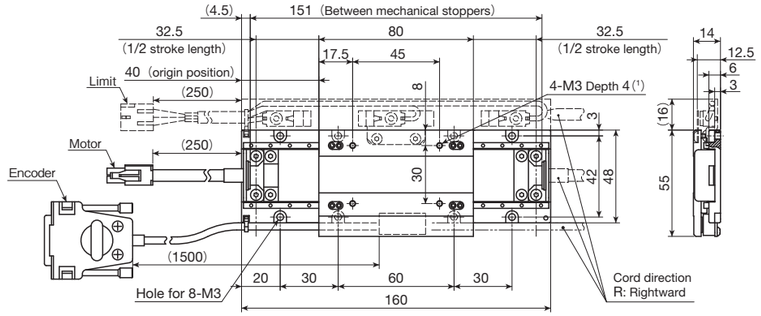

Note (1) Too deep insertion depth of the mounting bolt may affect the running performance of the moving table, so never insert a bolt longer than the depth of the through hole.

Remark: Dashed line portions in the dimensional figures indicate the sensor-included specification / SC.

NT80V25

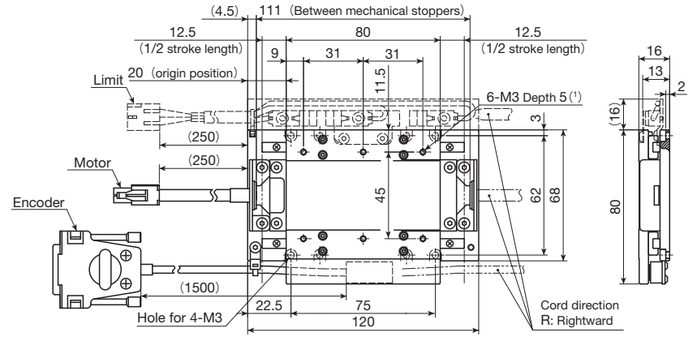

NT80V65

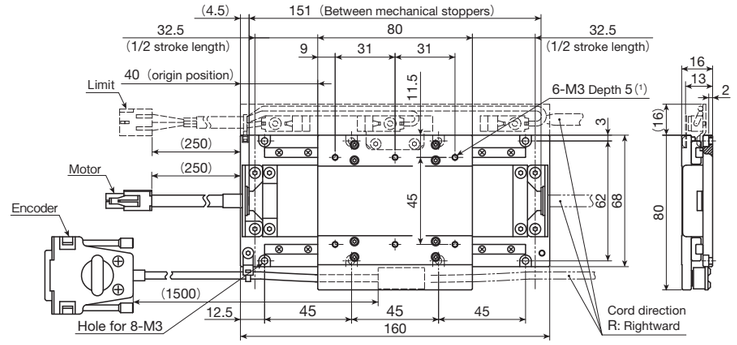

NT80V120

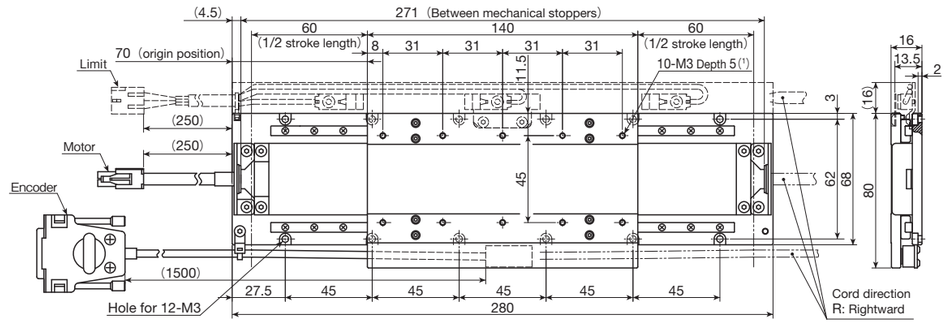

Note (1) Too deep insertion depth of the mounting bolt may affect the running performance of the moving table, so never insert a bolt longer than the depth of the through hole.

Remarks 1. Dashed line portions in the dimensional figures indicate the sensor-included specification / SC.

2. XY two-axis specification table combined with NT80V with NT80V25 used as an upper axis is assembled in IKO before shipping.

1N=0.102kgf=0.2248lbs.
1mm=0.03937inch

NT88H25

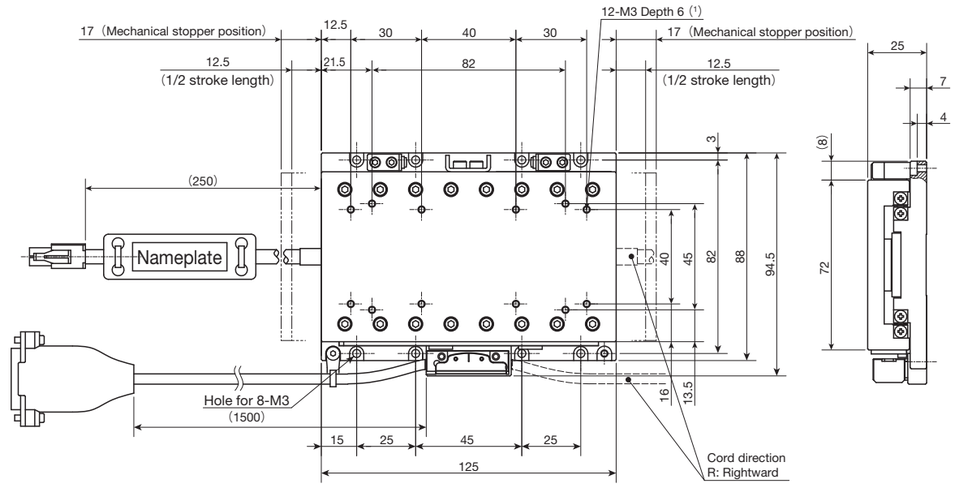

NT88H65

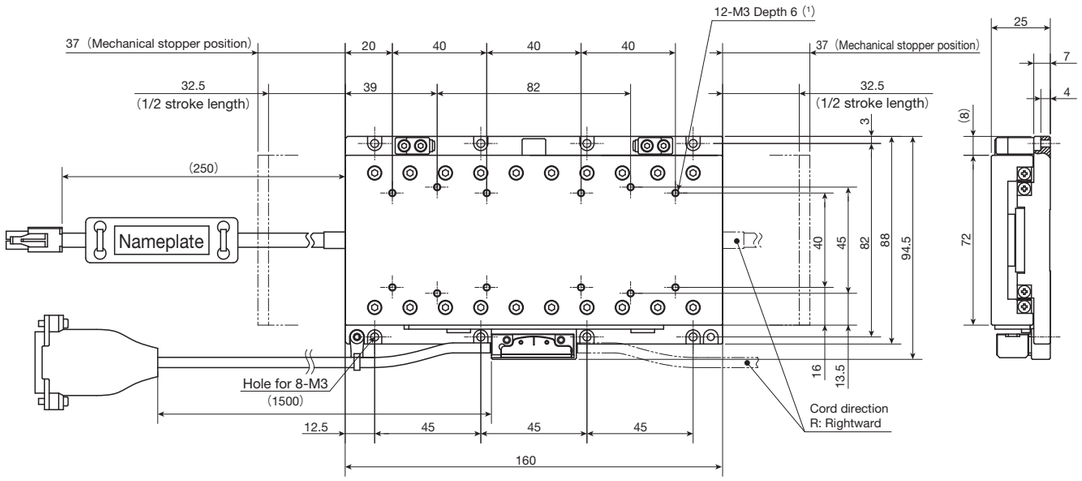

Note (1) Too deep insertion depth of the mounting bolt may affect the running performance of the moving table, so never insert a bolt longer than the depth of the tapped hole.

NT80XZ

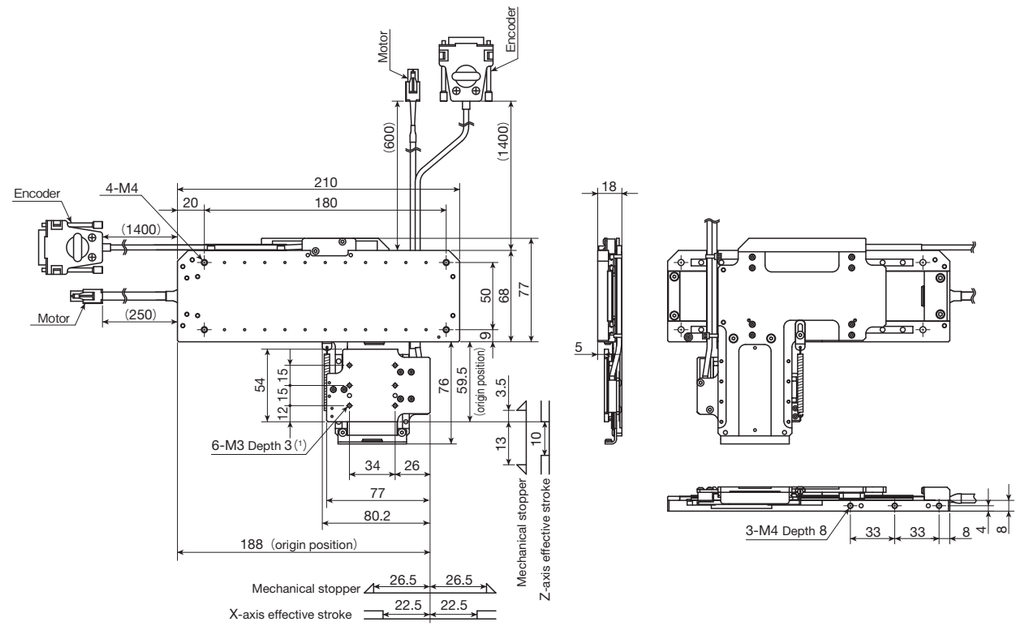

NT90XZH

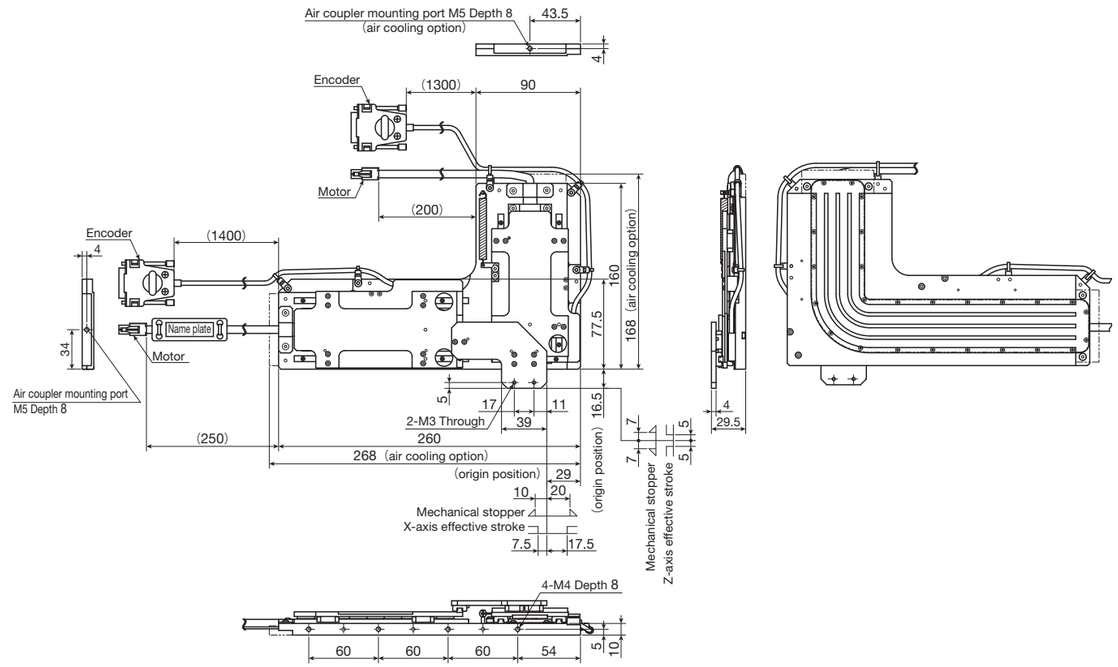

Note (1) Too deep insertion depth of the mounting bolt may affect the running performance of the moving table, so never insert a bolt longer than the depth of the through hole.

1N=0.102kgf=0.2248lbs.
1mm=0.03937inch

SA…DE

SA···DE

Linear motor drive

Linear

Alignment

IKO C-Lube Maintenance-free

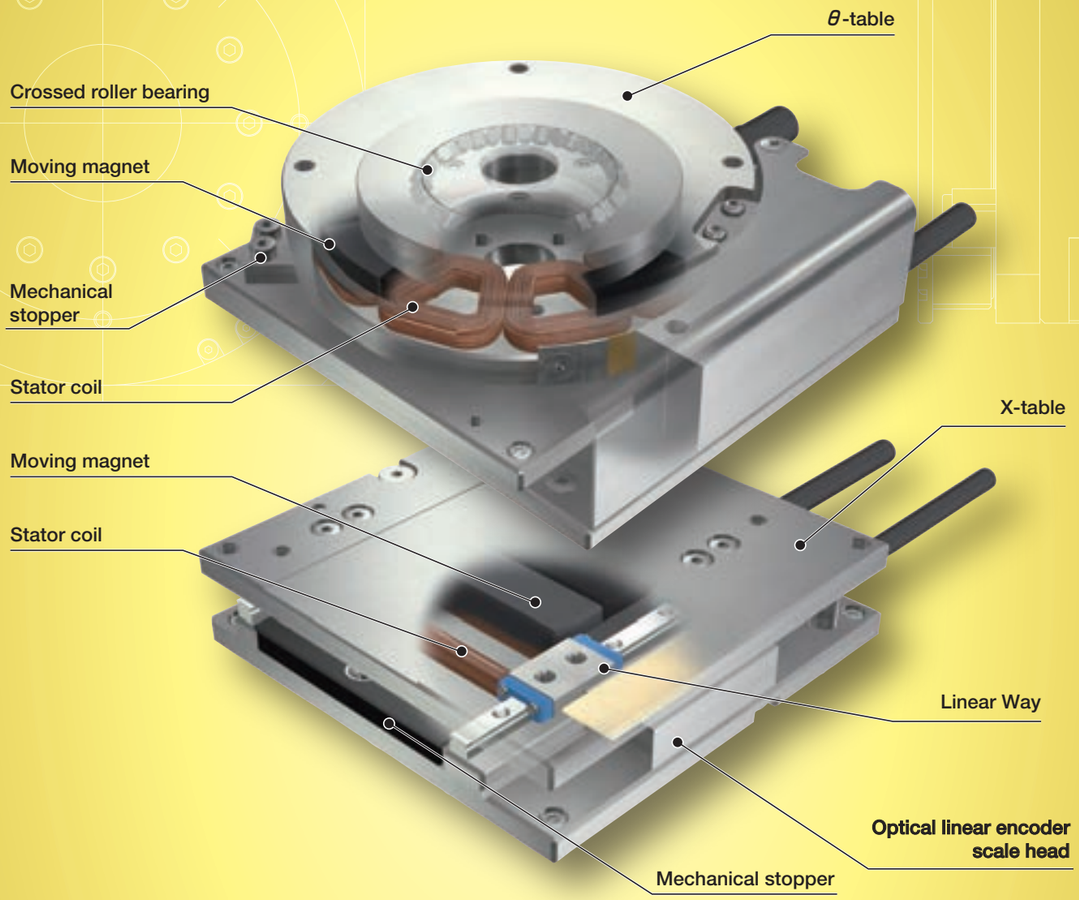

Major product specifications

Driving method	Linear motor
Linear motion rolling guide and bearing	XY-axis: Linear Way (ball type) θ-axis: Crossed Roller Bearing
Lubrication	Lubrication part "C-Lube" is built-in (except for θ-axis and SA65DE/X)
Material of table and bed	High carbon steel
Sensor	Provided as standard

Accuracy

unit: mm

Positioning repeatability	XY-axis: ±0.0005 θ-axis: ±0.5 ～ 1.3 sec
Positioning accuracy	–
Lost motion	–
Parallelism in table motion A	–
Parallelism in table motion B	–
Attitude accuracy	–
Straightness	–
Backlash	–

Points

● Compact XYθ-table

1 Using a Linear Way L miniature linear motion rolling guide in the linear motion guiding parts and Crossed Roller Bearing in the rotation guiding parts respectively and adopting direct drive method in the drive section, this is an alignment stage for achieving low profile and compact XYθ motion.

● Flexible combination of XYθ

2 X-table for linear movement and θ-table serving as rotary positioning section are listed on lineup as basic configuration. Combination of X-axis and θ-axis and alignment table for XY-axis can be easily configured.

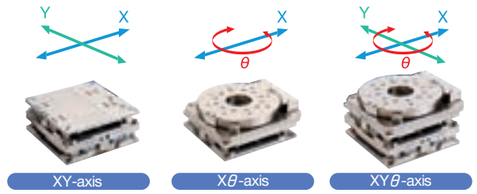

● Thin and compact

3 Coreless linear motor, Linear Way L and Crossed Roller Bearing are adopted. As compared with ball screw-driven stage, extremely low profile is achieved.

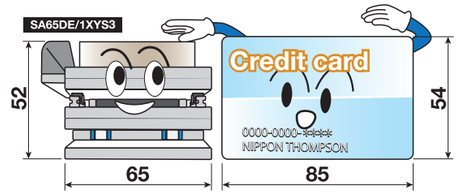

● High resolution and high responsiveness

4 Performing full-closed loop control of direct drive-type stage with high resolution linear encoder built-in has achieved high resolution and high accuracy.

Drive conditions
SA120DE/1X3
Speed : 100mm/s
Acc./dec. time : 20ms
Stroke : 20mm
Carrying mass : 250g

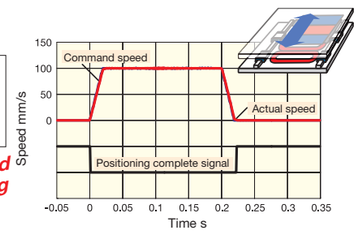

Achieves high-speed positioning according to commands!

Measuring conditions
SA120DE/1S3
Carrying mass : 1000g
Feed command : 1.44 sec

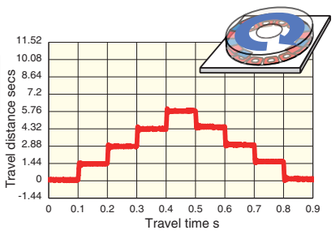

Precise steps for fine feeding!

Alignment Stage SA specification list

Model and size	SA65DE/X	SA120DE/X	SA200DE/X (1)	SA65DE/S	SA120DE/S	SA200DE/S
Sectional shape	65	120	200	65	120	200
Maximum thrust N	25	70	400	Max. torque 0.5N·m	Max. torque 2.0N·m	Max. torque 4.0N·m
Rated thrust N	3.5	15	70	Rated torque 0.06N·m	Rated torque 0.4N·m	Rated torque 1.2N·m
Maximum load mass kg	2.4	5.9	30.0	2.2	6.8	12.3
Effective stroke length mm	10	20	20	Effective operating angle 50degree	Effective operating angle 60degree	Effective operating angle 280degree
Resolution μm	0.1 / 0.5	0.1 / 0.5	0.1 / 0.5	0.64sec 5625pulse/deg	0.36sec 10000pulse/deg	0.25sec 14400pulse/deg
Maximum speed mm/s	270 / 500	400 / 800	400 / 800	720deg/sec	400deg/sec	270deg/sec
Positioning repeatability μm	±0.5	±0.5	±0.5	±1.3sec	±0.8sec	±0.5sec

Note (1) SA200DE/X can be manufactured as a custom product upon request. If needed, please contact IKO.

1N=0.102kgf=0.2248lbs.
1mm=0.03937inch

Identification Number

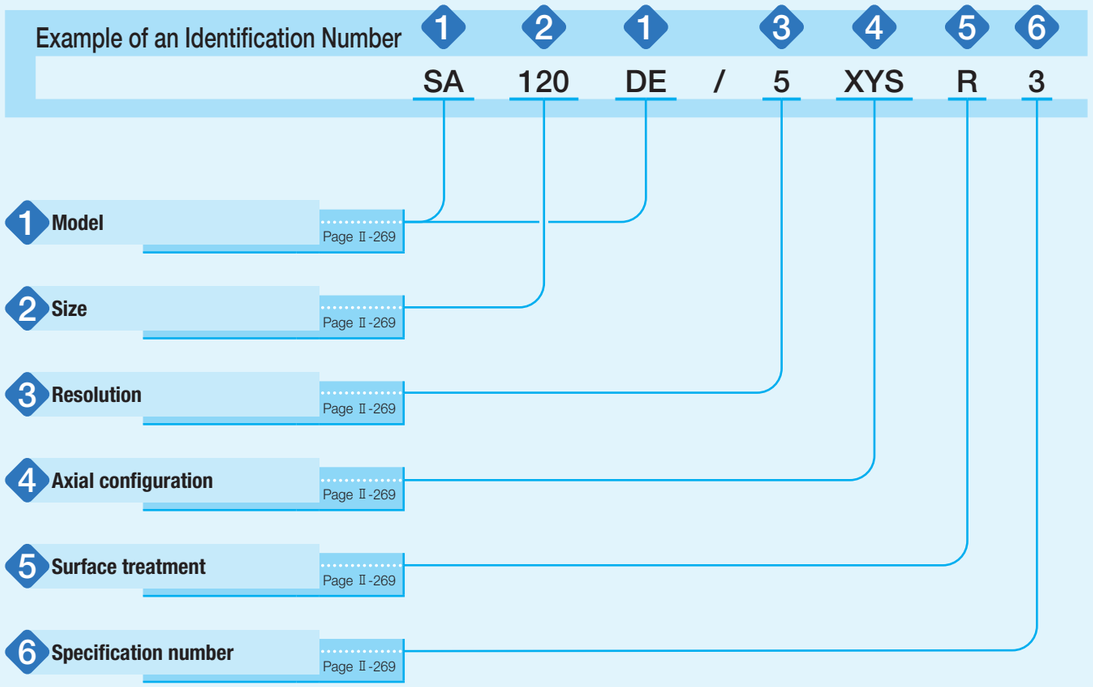

Identification Number and Specification

1 Model

SA···DE: Alignment Stage SA

2 Size

65: □ 65, ϕ 65
120: □120, ϕ120
200: ϕ200

3 Resolution

1: 0.1μm
5: 0.5μm
Specify the resolution of the encoder for X-axis or XY-axis.
When selecting only S: θ-axis in the entry of section 4, set "No symbol" for the resolution.

4 Axial configuration

Select an axial configuration from the list of Table 1.

Table 1 Axial configuration and application

Axial configuration	SA65DE	SA120DE	SA200DE
X : Only X-axis	○	○	– (1)
S : Only θ-axis	○	○	○
XY : XY -based two-axis configuration	○	○	– (1)
XS : Xθ -based two-axis configuration	○	○	
XYS : X, Y, and θ-based three-axis configuration	○	○	

Note (1) Can be manufactured as a custom product upon request. If needed, please contact IKO.

5 Surface treatment

No symbol: Electroless nickel plating
R : Black chrome surface treatment
Surface treatment is performed on the surfaces of table and bed.

6 Specification number

3: Specification number 3

The specification number is limited to 3.

Specifications

Table 2.1 Specification / Performance

Item \ Identification number		SA65DE/1X	SA65DE/5X	SA120DE/1X	SA120DE/5X
Maximum thrust (1)	N	25		70	
Rated thrust (2)	N	3.5		15	
Effective stroke length	mm	10		20	
Maximum load mass	kg	2.4		5.9	
Resolution	μm	0.1	0.5	0.1	0.5
Maximum speed (3)	mm/s	270	500	400	800
Positioning repeatability (4)	μm	±0.5			
Mass of moving table	kg	0.17		1.2	
Total mass (5)	kg	0.35		2.5	
Ambient temperature and humidity in operation		0~40℃ · 20~80%RH (keep dewdrop free)			

Notes (1) The duration of maximum thrust is up to 1 second.
(2) This is based on the case of mounting on a metal mating member material at an ambient temperature of 20℃.
(3) For the case of exceeding the displayed speed, please contact IKO.
(4) When the temperature of the product is constant.
(5) Mass of the cord is not included.

Table 2.2 Specification / Performance

Item \ Identification number		SA65DE/S	SA120DE/S	SA200DE/S
Maximum torque (1)	N·m	0.5	2.0	4.0
Rated torque (2)	N·m	0.06	0.4	1.2
Maximum load mass	kg	2.2	6.8	12.3
Effective operating angle	degree	50	60	280
Resolution	sec	0.64	0.36	0.25
	pulse/degree	5 625	10 000	14 400
Maximum speed (3)	degree/sec	720	400	270
Positioning repeatability (4)	sec	±1.3	±0.8	±0.5
Inertia moment of moving table	kg·m^2	0.00012	0.002	0.013
Total mass (5)	kg	0.5	2	6
Ambient temperature and humidity in operation		0~40℃ · 20~80%RH (keep dewdrop free)		

Notes (1) The duration of maximum torque is up to 1 second.
(2) This is based on the case of mounting on a metal mating member material at an ambient temperature of 20℃.
(3) For the case of exceeding the displayed speed, please contact IKO.
(4) When the temperature of the product is constant.
(5) Mass of the cord is not included.

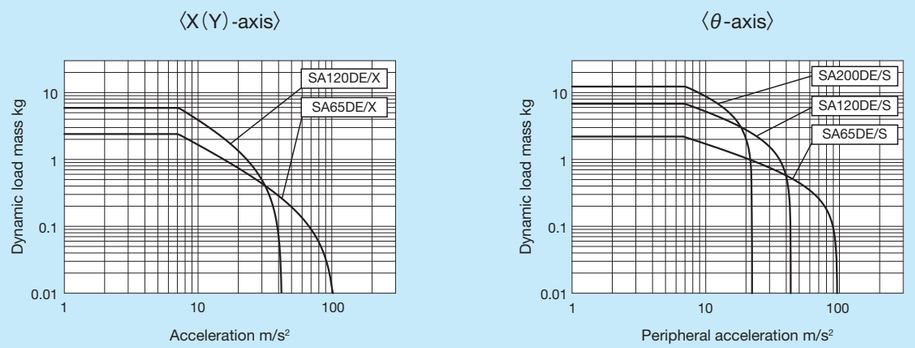

Fig. 1 Dynamic load mass

Remark: Dynamic load mass of θ-axis is a value calculated as cube of steel. And, the acceleration is converted as value of stage periphery.

Mounting

For the processing accuracy of the Precision Positioning Table mounting surface and the tightening torque of the fixing screws, see page Ⅲ-29.

1N=0.102kgf=0.2248lbs.
1mm=0.03937inch

Sensor Specification

Table 3.1 Sensor timing chart for SA···DE/X (X-axis)

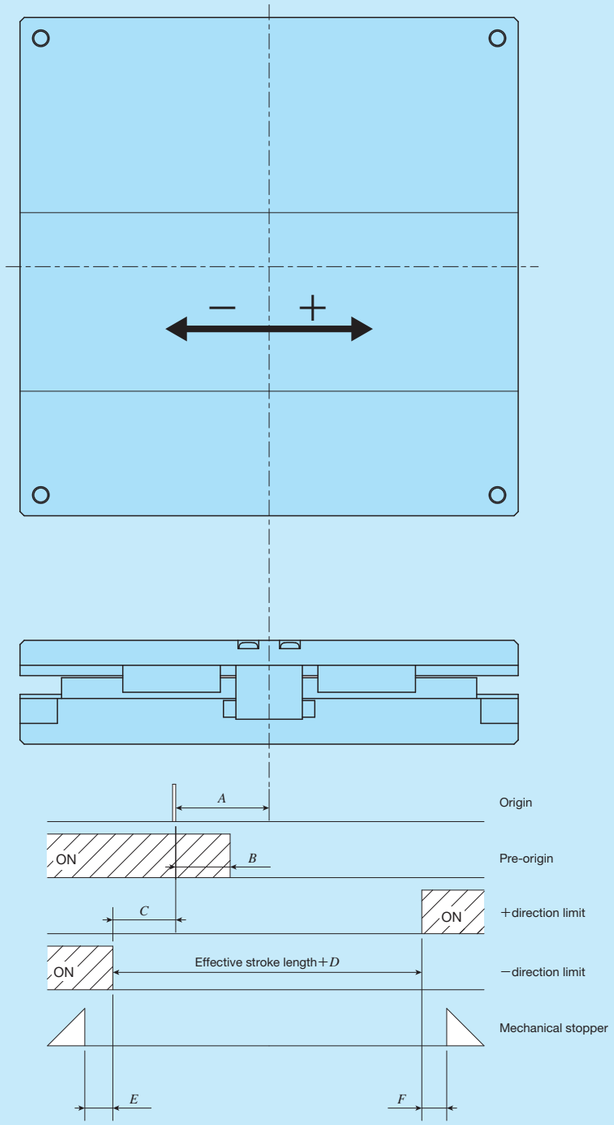

unit: mm

Model and size	*A*	*B*	*C*	*D*	*E*	*F*
SA65DE/X	5	2.5	1.5	3	1.5	1.5
SA120DE/X	0	3	12	4	2	2

Remarks 1. Respective values are for reference and are not guaranteed values. For detailed dimensions, please contact IKO.
2. For detailed specifications of respective sensors, please see the section of sensor specification in General Explanation.

Table 3.2 Sensor timing chart for SA···DE/S (θ-axis)

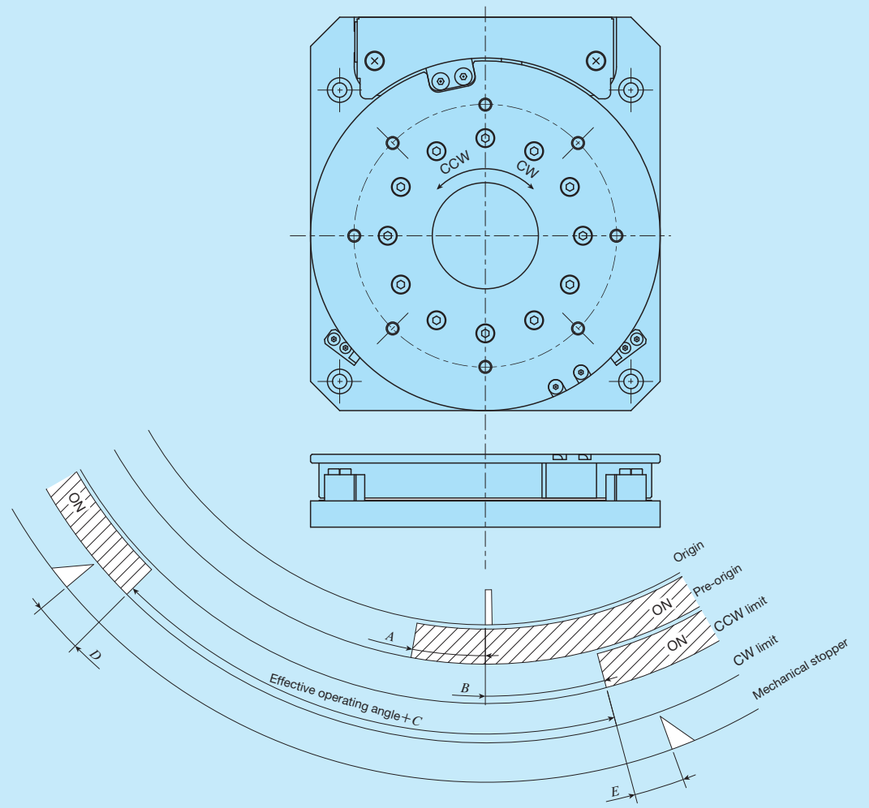

unit: degree

Model and size	*A*	*B*	*C*	*D*	*E*
SA65DE/S	4	11	10	5	5
SA120DE/S	3	3	6	3	3
SA200DE/S	2	4	0	4	4

Remarks 1. Respective values are for reference and are not guaranteed values. For detailed dimensions, please contact IKO.
2. For detailed specifications of respective sensors, please see the section of sensor specification in General Explanation.

1N=0.102kgf=0.2248lbs.
1mm=0.03937inch

System Configuration

Two series of dedicated drivers, ADVA and MR-J4, are available for the Alignment Stage SA, and the system configuration varies depending on the driver used. For ADVA, two types of specification, pulse train specification and high speed network EtherCAT specification, are available. For MR-J4, only high speed network SSCNET Ⅲ/H specification is available. Table 4 shows the example of identification number for ADVA, and Table 5 shows the tables and model number of applicable MR-J4. For detailed driver specification, please see the driver specification on page Ⅱ-360 to Ⅱ-363.

Table 4 Identification number for ADVA

ADVA	–	01NL	EC	/	SA65DE-S
(1) Model		(2)	(3)		(4)

(2) Power supply voltage	
01NL	Single-phase / Three-phase 200 V
R5ML	Single-phase 100 V

(3) Command type	
No symbol	Pulse train command
EC	EtherCAT

(4) Applicable alignment stage model	
SA65DE -S	SA65DE /S
SA65DE -X	SA65DE /X
SA120DE -S	SA120DE /S
SA120DE -X	SA120DE /X
SA200DE -S	SA200DE /S

Table 5 Identification numbers of SA...DE and applicable MR-J4

Identification number of table	Identification number of driver
SA65DE /S	MR-J4-10B-RJ /SA65DE -S
SA65DE /X	MR-J4-10B-RJ /SA65DE -X
SA120DE /S	MR-J4-10B-RJ /SA120DE -S
SA120DE /X	MR-J4-10B-RJ /SA120DE -X
SA200DE /S	MR-J4-10B-RJ /SA200DE -S

Table 6 System configuration for SA65DE, SA120DE with driver ADVA

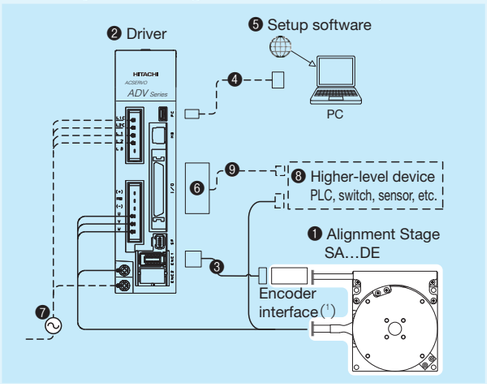

No.	Name	Identification Number
❸	Encoder extension cord (2m) (2)	TAE20V4-EC02
❹	PC connection cable	USB mini B cable This must be prepared by customer.
❺	Setup software	ProDriveNext Please download from the official website of Hitachi Industrial Equipment Systems Co., Ltd.
❻	I/O connector	TAE20R5-CN (3)
❼	Power cord	This must be prepared by customer.
❽	Higher-level device	
❾	I/O connector connection cable	

Notes (1) XY-axis of SA65DE is not provided with an encoder interface.
(2) For specific cord length, please contact IKO.
(3) I/O connector TAE20R5-CN is a combined product of 10150-3000PE (connector) and 10350-52F0-008 (cover) from 3M Japan Limited.

Table 7 System configuration for SA200DE/S with driver ADVA

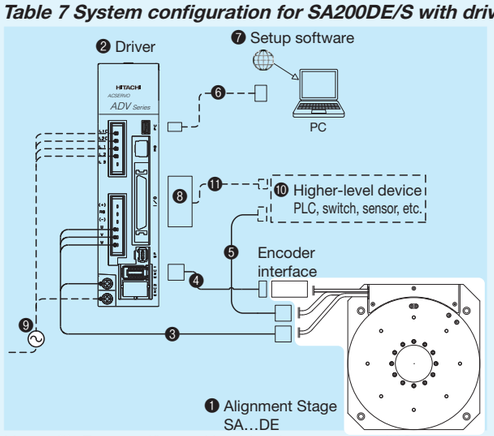

No.	Name	Identification Number
❸	Motor extension cord (3m) (1)	TAE20V3-AM03
❹	Encoder extension cord (2m) (1)	TAE20V4-EC02
❺	Sensor extension cord (2)	TAE10V8-LC□□
❻	PC connection cable	USB mini B cable This must be prepared by customer.
❼	Setup software	ProDriveNext Please download from the official website of Hitachi Industrial Equipment Systems Co., Ltd.
❽	I/O connector	TAE20R5-CN (3)
❾	Power cord	This must be prepared by customer.
❿	Higher-level device	
⓫	I/O connector connection cable	

Notes (1) For specific cord length, please contact IKO.
(2) The lengths of the sensor extension cord is specified in the fields of □□ located at the end of the identification number with a length from 3 to 10m in units of 1m.
(3) I/O connector TAE20R5-CN is a combined product of 10150-3000PE (connector) and 10350-52F0-008 (cover) from 3M Japan Limited.

● Setup software

To operate Alignment Stage SA, initial setting of driver parameters is required. Parameter setting for driver is performed using the setup software. It can also be used for gain adjustment and operational status check.
In the driver, the setup software and PC connection cable are not provided. These can be shared in plural drivers but at least 1 set is required. Please prepare these on your own or place an order separately according to your requirement.

Table 8 System configuration for SA65DE, SA120DE with driver ADVA...EC

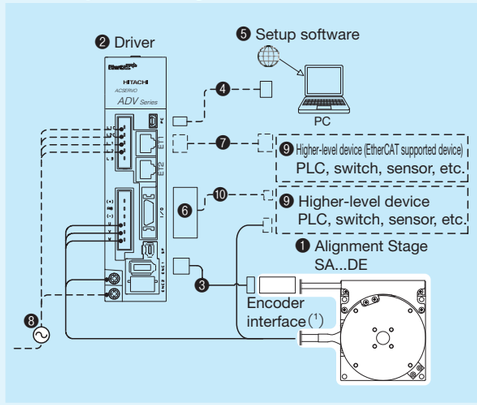

No.	Name	Identification Number
❸	Encoder extension cord (2m) (2)	TAE20V4-EC02
❹	PC connection cable	USB mini B cable This must be prepared by customer.
❺	Setup software	ProDriveNext Please download from the official website of Hitachi Industrial Equipment Systems Co., Ltd.
❻	I/O connector	TAE20V5-CN (3)
❼	Ethernet cable	This must be prepared by customer.
❽	Power cord	
❾	Higher-level device	
❿	I/O connector connection cable	

Notes (1) XY-axis of SA65DE is not provided with an encoder interface.
(2) For specific cord length, please contact IKO.
(3) I/O connector TAE20V5-CN is a combined product of 10120-3000PE (connector) and 10320-52F0-008 (cover) from 3M Japan Limited.

Table 9 System configuration for SA200DE/S with driver ADVA...EC

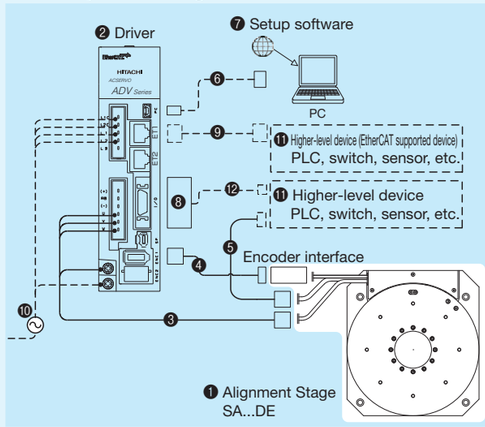

No.	Name	Identification Number
❸	Motor extension cord (3m) (1)	TAE20V3-AM03
❹	Encoder extension cord (2m) (1)	TAE20V4-EC02
❺	Sensor extension cord (2)	TAE10V8-LC□□
❻	PC connection cable	USB mini B cable This must be prepared by customer.
❼	Setup software	ProDriveNext Please download from the official website of Hitachi Industrial Equipment Systems Co., Ltd.
❽	I/O connector	TAE20V5-CN (3)
❾	Ethernet cable	This must be prepared by customer.
❿	Power cord	
⓫	Higher-level device	
⓬	I/O connector connection cable	

Notes (1) For specific cord length, please contact IKO.
(2) The lengths of the sensor extension cord is specified in the fields of □□ located at the end of the identification number with a length from 3 to 10m in units of 1m.
(3) I/O connector TAE20V5-CN is a combined product of 10120-3000PE (connector) and 10320-52F0-008 (cover) from 3M Japan Limited.

1N=0.102kgf=0.2248lbs.
1mm=0.03937inch

System configuration

Table 10 System configuration (SSCNET Ⅲ/H supported) for SA...DE with driver MR-J4-10B

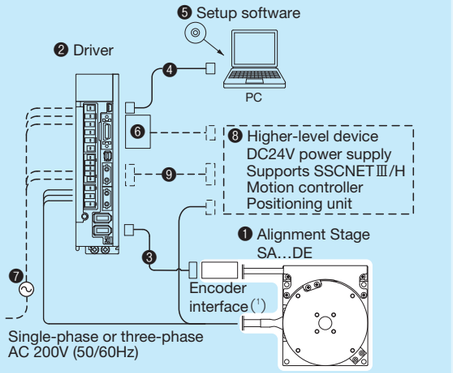

No.	Name	Identification Number
❸	Encoder extension cord (2m) (2)	TAE20V6-EC02
❹	PC connection cable (3m)	MR-J3USBCBL3M
❺	Setup software	SW1DNC-MRC2-J
❻	Connectors for input/output connection	MR-CCN1 (3)
❼	Power cord	This must be prepared by customer.
❽	Higher-level device (4)	
❾	Connection cable for SSCNET Ⅲ/H	

Notes (1) XY-axis of SA65DE is not provided with an encoder interface.
(2) For specific cord length, please contact IKO.
(3) Connector for input/output connection MR-CCN1 is a combined product of 10120-3000PE (connector) and 10320-52F0-008 (cover) from 3M Japan Limited.
(4) The higher-level devices are a motion controller, positioning unit and DC24V power supply ready for SSCNET Ⅲ/H from Mitsubishi Electric Corporation.

Table 11 System configuration (SSCNET Ⅲ/H supported) for SA200DE/S with driver MR-J4-10B

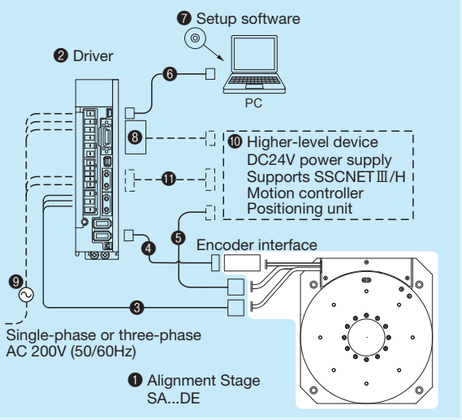

No.	Name	Identification Number
❸	Motor extension cord (3m) (1)	TAE20V3-AM03
❹	Encoder extension cord (2m) (1)	TAE20V6-EC02
❺	Sensor extension cord (2)	TAE10V8-LC□□
❻	PC connection cable (3m)	MR-J3USBCBL3M
❼	Setup software	SW1DNC-MRC2-J
❽	Connectors for input/output connection	MR-CCN1 (3)
❾	Power cord	This must be prepared by customer.
❿	Higher-level device (4)	
⓫	Connection cable for SSCNET Ⅲ/H	

Notes (1) For specific cord length, please contact IKO.
(2) The lengths of the sensor extension cord is specified in the fields of □□ located at the end of the identification number with a length from 3 to 10m in units of 1m.
(3) Connector for input/output connection MR-CCN1 is a combined product of 10120-3000PE (connector) and 10320-52F0-008 (cover) from 3M Japan Limited.
(4) The higher-level devices are a motion controller, positioning unit and DC24V power supply ready for SSCNET Ⅲ/H from Mitsubishi Electric Corporation.

IKO Alignment Stage SA

SA65DE/X

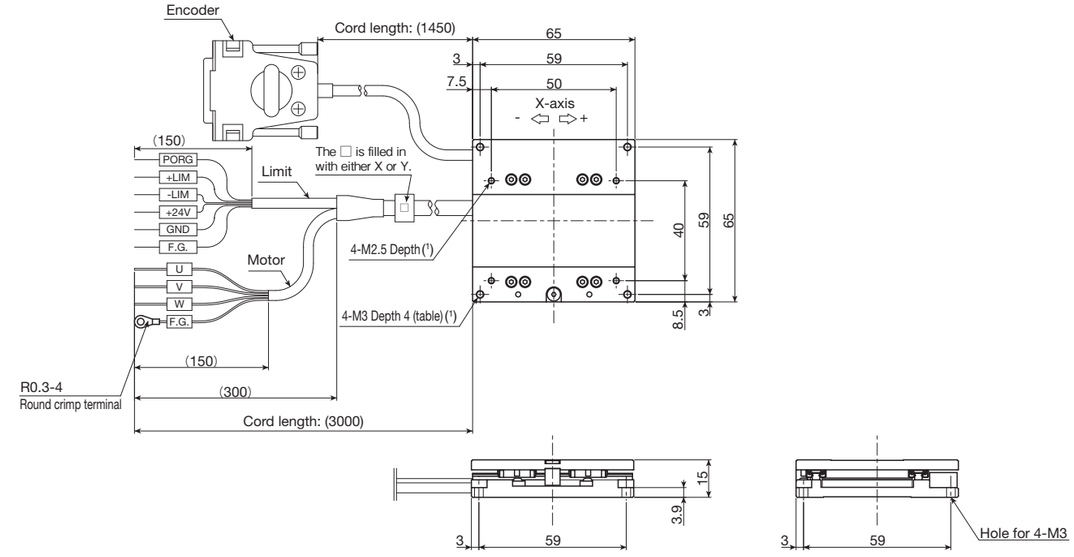

SA65DE/S

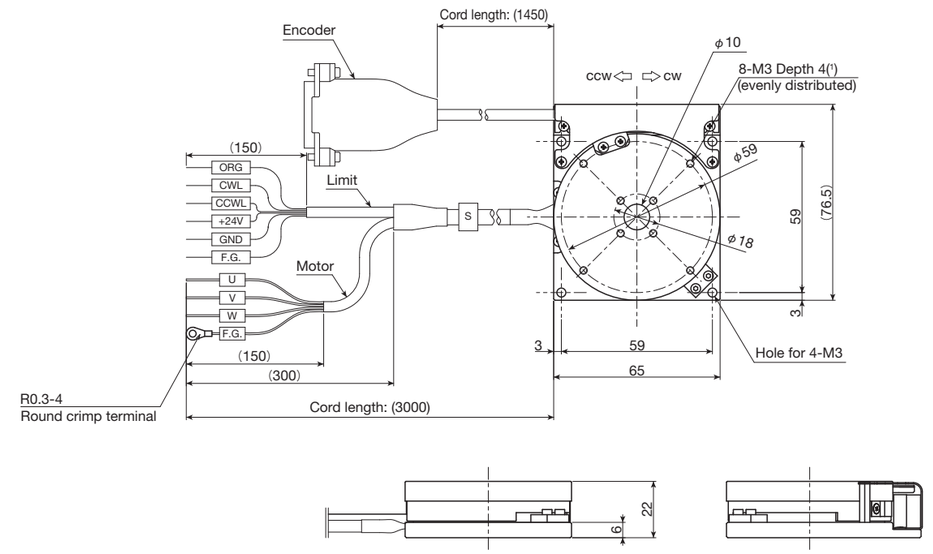

Note (1) Too deep insertion depth of the mounting bolt may affect the running performance of the moving table, so never insert a bolt longer than the depth of the through hole.
Remark: The text direction on the mark tube of the motor / limit cord may vary by product.

SA65DE/XY

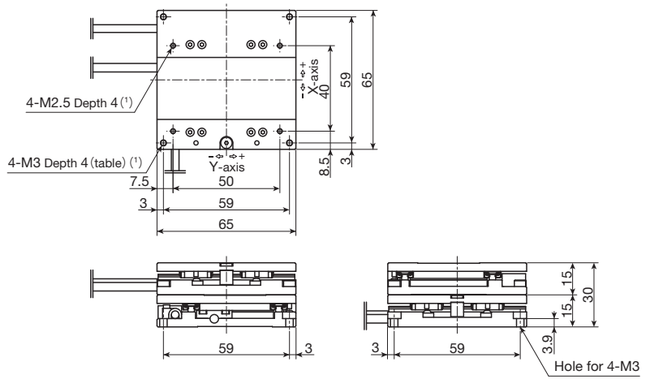

SA65DE/XS

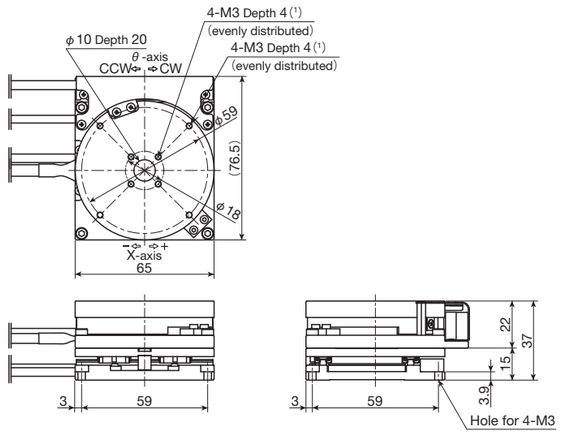

SA65DE/XYS

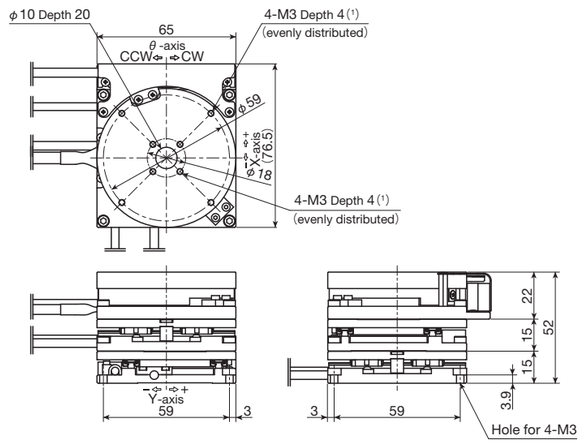

Note (1) Too deep insertion depth of the mounting bolt may affect the running performance of the moving table, so never insert a bolt longer than the depth of the through hole.
Remark: For the cable length, please see the dimension tables for SA65DE/X and SA65DE/S.

SA120DE/X

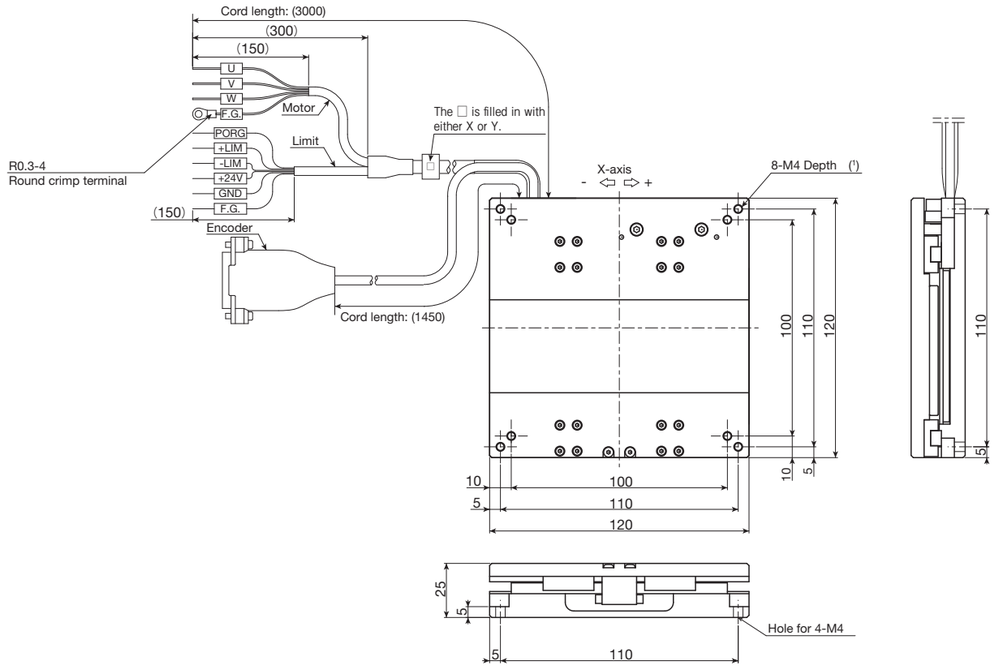

SA120DE/S

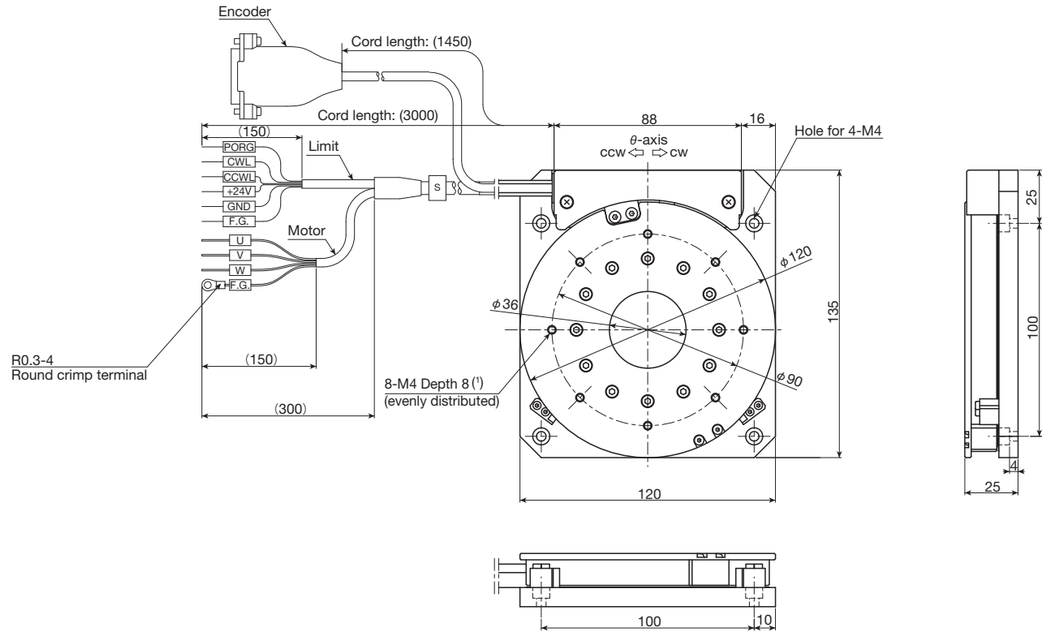

Note (1) Too deep insertion depth of the mounting bolt may affect the running performance of the moving table, so never insert a bolt longer than the depth of the through hole.
Remark: The text direction on the mark tube of the motor / limit cord may vary by product.

1N=0.102kgf=0.2248lbs.
1mm=0.03937inch

SA120DE/XY

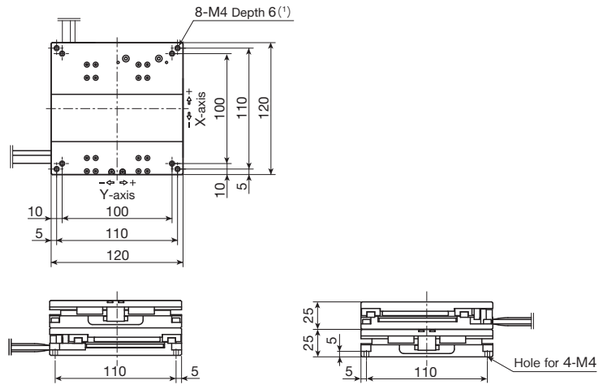

SA120DE/XS

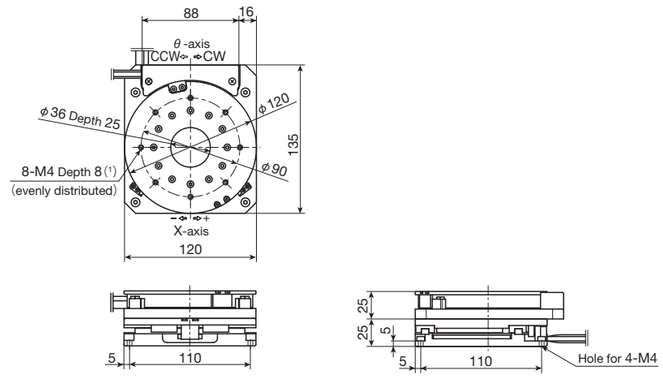

SA120DE/XYS

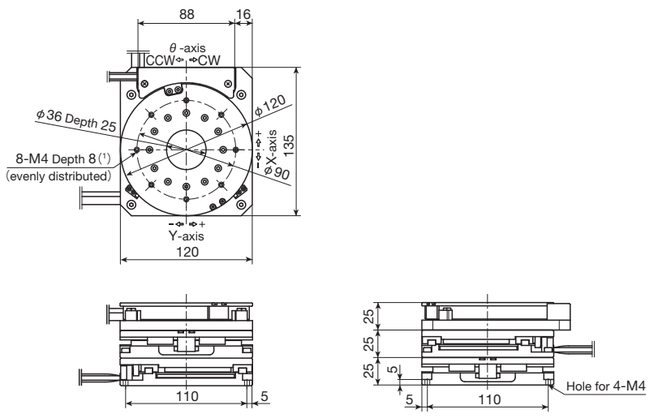

Note (1) Too deep insertion depth of the mounting bolt may affect the running performance of the moving table, so never insert a bolt longer than the depth of the through hole.

Remark: For the cable length, please see the dimension tables for SA120DE/X and SA120DE/S.

SA200DE/S

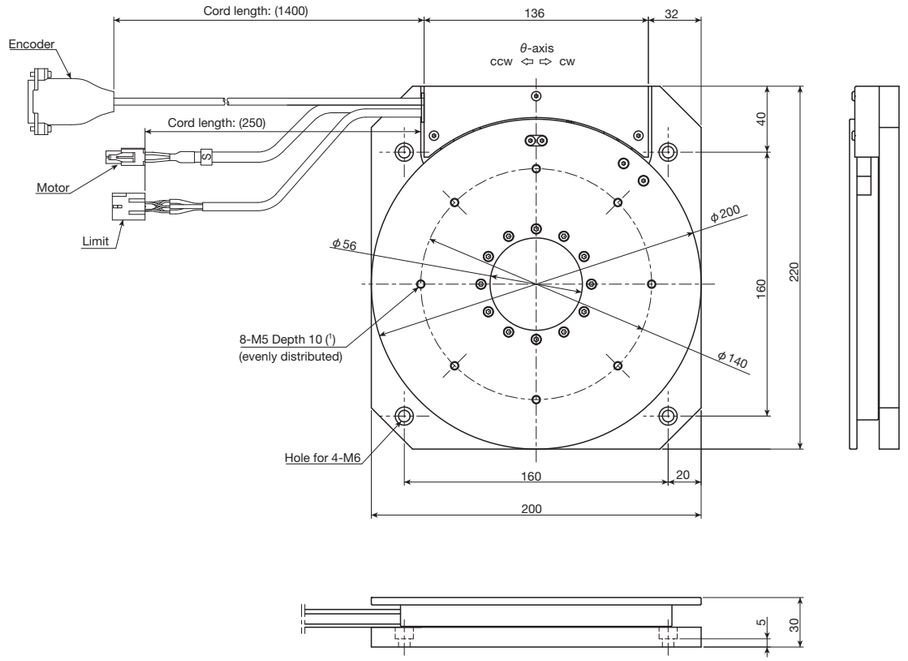

Note (1) Too deep insertion depth of the mounting bolt may affect the running performance of the moving table, so never insert a bolt longer than the depth of the through hole.

Encoder interface

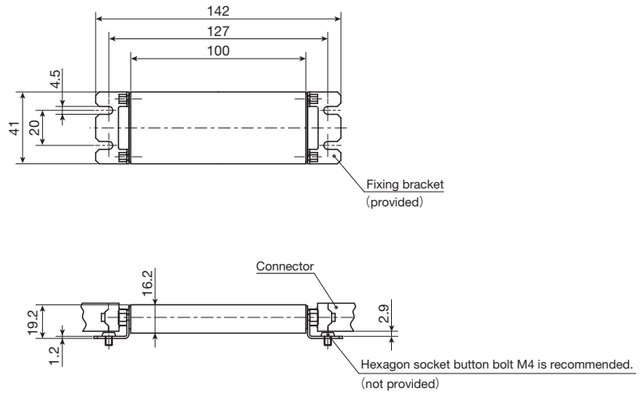

1N=0.102kgf=0.2248lbs.
1mm=0.03937inch

LT
(LT…CE, LT…LD, LT…H)

LT

Linear motor

Linear



Major product specifications

Driving method	Linear motor
Linear motion rolling guide	Linear Way（ball type）
Built-in lubrication part	Lubrication part "C-Lube" is built-in
Material of table and bed	High-strength aluminum alloy (High carbon steel is used for the LT100CE bed)
Sensor	Select by identification number

Accuracy

unit: mm

Positioning repeatability	±0.0005～0.0010
Positioning accuracy	–
Lost motion	–
Parallelism in table motion A	–
Parallelism in table motion B	–
Attitude accuracy	–
Straightness	–
Backlash	–

Compact, high thrust, and long stroke LT series!

Linear Motor Table LT is a compact and high-precision positioning table with an optical linear encoder built in and with AC linear servomotor incorporated between moving table and bed. Lightweight moving table and large thrust force enables the operation of high acceleration / deceleration and high response. And, the advanced servo technology achieves high static stability and speed stability.

Three types, consisting of Compact type LT···CE, Long stroke type LT···LD, and High thrust type LT···H, are listed on lineup, which allows customers to select the most suitable model depending on the usage.

Linear Motor Table LT specification list

Model and size		Compact type LT···CE						Long stroke type LT···LD								
		LT100CEG			LT150CEG			LT130LDG			LT170LDG			LT170LDV		
Sectional shape		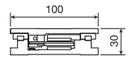			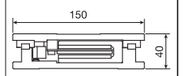			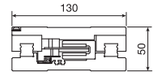			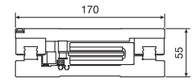					
Maximum thrust	N	120			350			120			350			145		
Rated thrust	N	15			60			15			60			25		
Maximum load mass	kg	12			35			12			35			20		
Effective stroke length	mm	1000			1200			2760			2720			2720		
Resolution	μm	0.1	0.5	1.0	0.1	0.5	1.0	0.1	0.5	1.0	0.1	0.5	1.0	0.1	0.5	1.0
Maximum speed	mm/s	700	2000	2000	700	2000	2000	700	2000	3000	700	2000	2000	700	2000	3000
Positioning repeatability	μm	±0.5	±0.5	±1.0	±0.5	±0.5	±1.0	±0.5	±0.5	±1.0	±0.5	±0.5	±1.0	±0.5	±0.5	±1.0

Model and size		High thrust type LT···H		
		LT170H		
Sectional shape		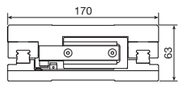		
Maximum thrust	N	900		
Rated thrust	N	Natural air cooling: 120 Air cooling : 150		
Maximum load mass	kg	90		
Effective stroke length	mm	2670		
Resolution	μm	0.1	0.5	1.0
Maximum speed	mm/s	700	1500 (2000)	1500 (2000)
Positioning repeatability	μm	±0.5	±0.5	±1.0

1N=0.102kgf=0.2248lbs.
1mm=0.03937inch

Sectional Structure of Linear Motor Table LT

Structures of LT···CE and LT···LD

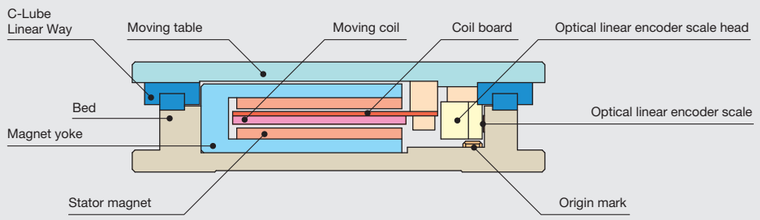

Structure of LT···H

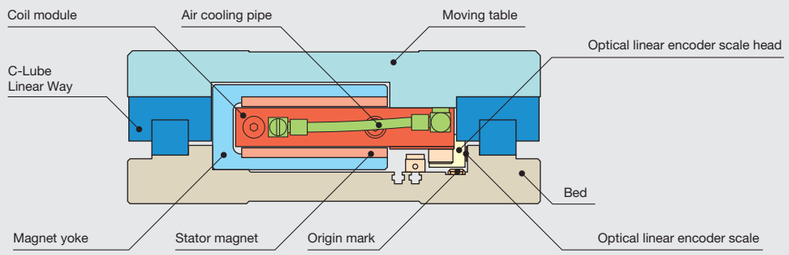

Operating principle of Linear Motor Table LT

Linear Motor Table LT consists of moving field coil and stator having a magnet arranged facing the inside of C-type yoke. Magnetic flux vertically exerted by magnet and rotational flux generated around the coil by electric current causes the coil to be forced horizontally. (Fleming's left-hand rule)

By switching the coil current to certain direction corresponding to the flux direction, continuous thrust force in a certain direction can be obtained and linear motions of the rotator is maintained. In the High Thrust Series, as the coils are densely arranged in vertical magnetic flux generated by a pair of coil yokes arranged one above the other, it can produce extremely high thrust force although it is small.

LT···CE and LT···LD

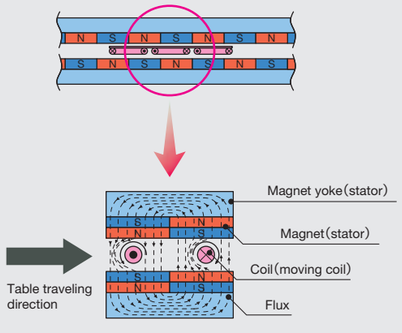

LT···H

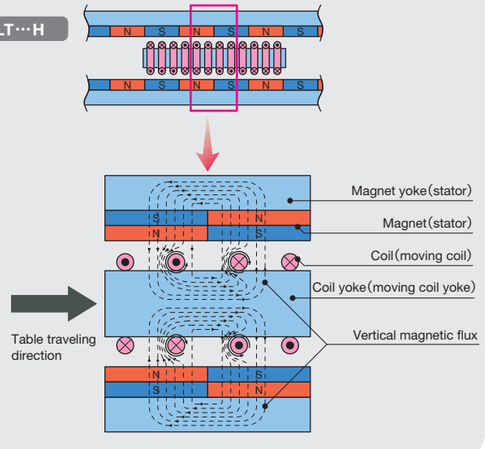

LT···CE [Compact type]

LT···CE is a compact linear motor table with high thrust force generating capability, which uses C-Lube Linear Way ML, miniature linear motion rolling guide in the table guiding parts and adopts lightweight aluminum alloy in the moving table.

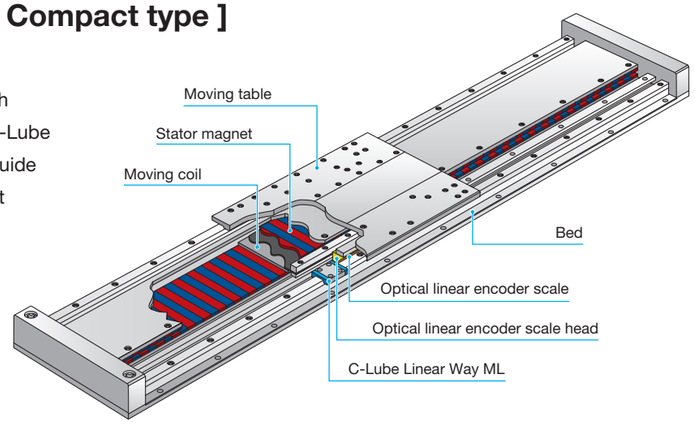

Points

1 ● Compact

Low profile design with downsizing thoroughly pursued by adopting C-Lube Linear Way ML and small optical linear encoder. Minimum sectional height of 30mm (LT100CE) is achieved.

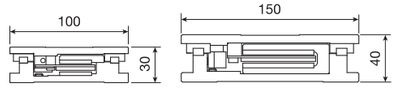

LT100CE **LT150CE**

2 ● Static stability

Advanced servo technology has achieved high static stability.



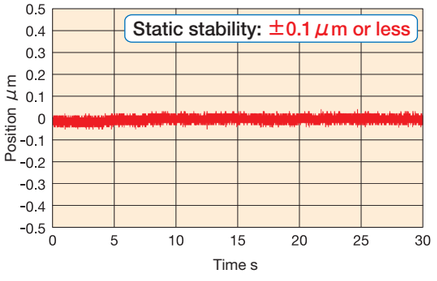

* Value when using ADVA driver.

3 ● High speed stability

Direct drive and advanced servo technology has achieved high speed stability.



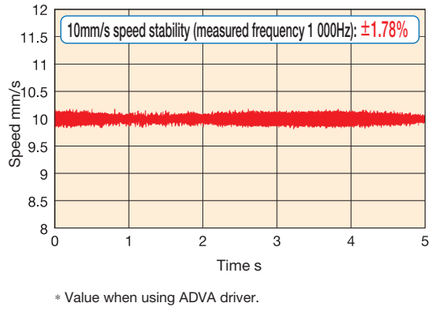

* Value when using ADVA driver.

4 ● High acceleration / deceleration and high response

This unit is small but can produce a great thrust force. Aluminum alloy-made and lightweight moving table has achieved the positioning by high acceleration / deceleration and high response. It contributes to shortening of tact time.

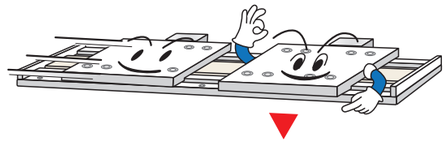

1N=0.102kgf=0.2248lbs.
1mm=0.03937inch

LT···LD [Long stroke type]

Using C-Lube Linear Way ME of the jointing specification track rail in the table guiding parts, the LT···LD is a linear motor table enabling the long stroke and high-speed operation.

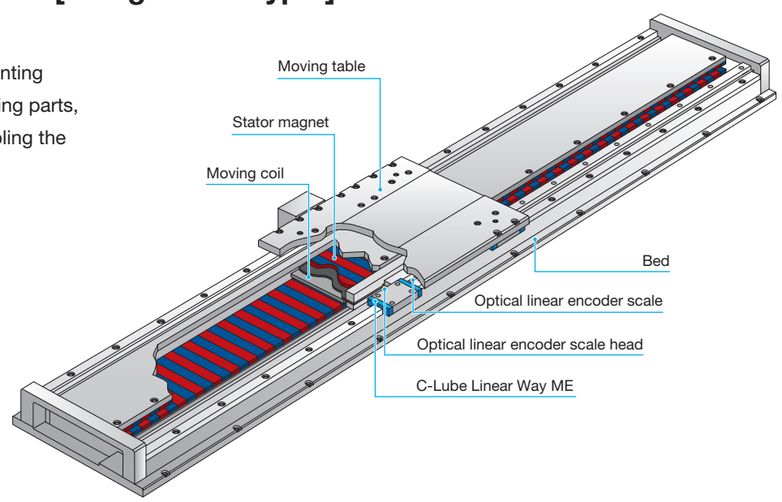

Points

1 ● High speed

Direct drive enables both high-precision positioning and high speed. Supports high speed operation required for long stroke motion. It is possible to perform high-speed motion of up to 3,000mm/s.

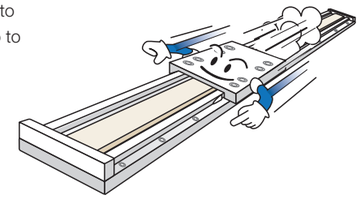

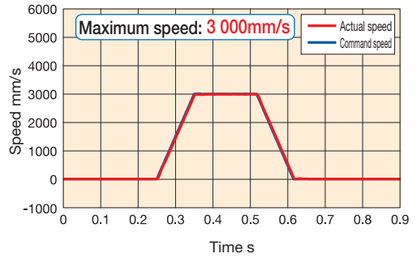

∗ Value when using ADVA driver.

2 ● Super long stroke

Adopting C-Lube Linear Way ME of jointing specification track rail, this unit has achieved long stroke of up to 2,760mm specific to linear motor driving.
(For stroke products longer than this, please consult IKO.)

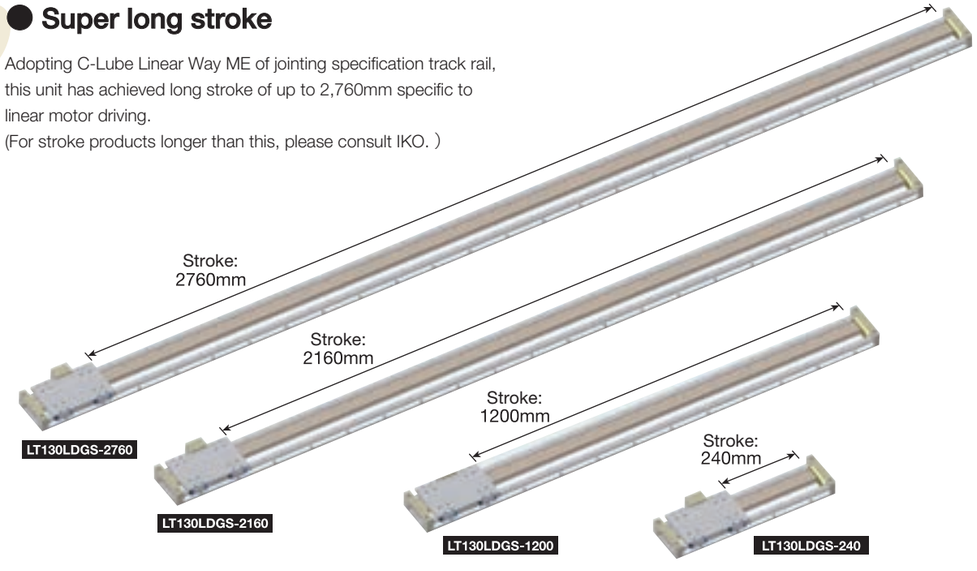

LT···H [High thrust type]

LT···H uses C-Lube Linear Way ME in the table guiding parts and can produce the biggest thrust force among Linear Motor Table LT units without impairing the compact feature, so that it is a linear motor table best suited for precision positioning of a heavy load.

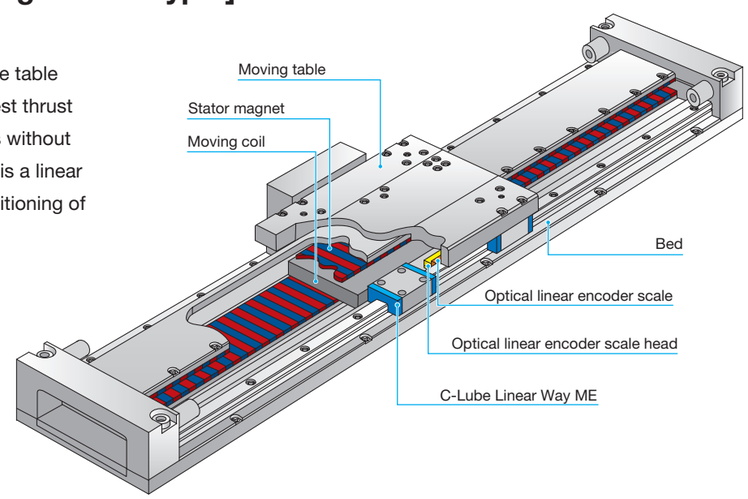

Points

1 ● High thrust

Although this table is compact in shape, it can produce maximum thrust force of 900N. This unit is best suited to the precision positioning of heavy load.

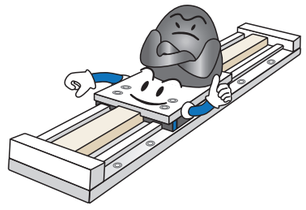

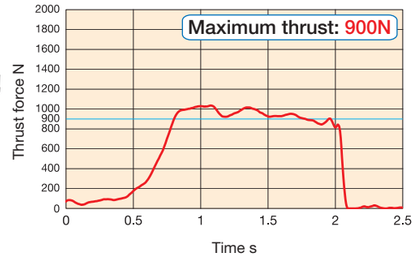

2 ● High acceleration / deceleration

Lightweight table and high thrust have achieved high acceleration / deceleration and high response.

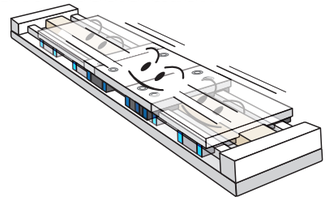

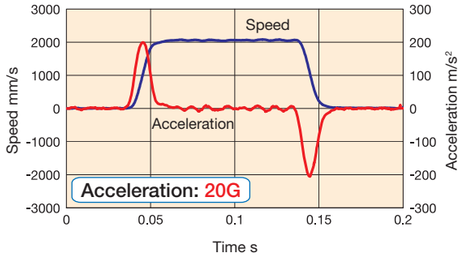

3 ● Air cooling

Cooling mechanism for suppressing the heating of motor section is optionally set. It enables shortening of tact time and contributes to improving the production efficiency.

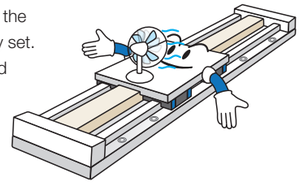

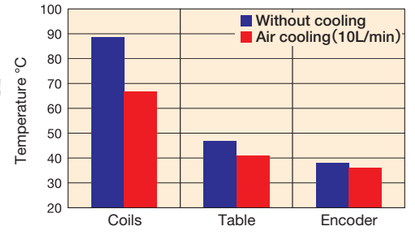

Cooling effect by LT170H at effective thrust force 120N

1N=0.102kgf=0.2248lbs.
1mm=0.03937inch

Identification Number

Example of an Identification Number

1	2	3	4	5	6	7	8	9	10	11
LT	100	CE	G	F	- 430	/ 5		D	SC	T2	1

1 Model — Page Ⅱ-289
2 Size — Page Ⅱ-289
3 Specification of thrust and speed — Page Ⅱ-289
4 Shape of moving table — Page Ⅱ-290
5 Stroke length — Page Ⅱ-290
6 Resolution — Page Ⅱ-290
7 Cooling type — Page Ⅱ-290
8 Designation of cover — Page Ⅱ-290
9 Designation of sensor — Page Ⅱ-290
10 Specification of moving table — Page Ⅱ-290
11 Specification number — Page Ⅱ-290

Identification Number and Specification

1 Model

LT···CE: Linear Motor Table LT compact series
LT···LD: Linear Motor Table LT long stroke series
LT···H : Linear Motor Table LT high thrust series

2 Size

100: Width 100mm (applicable to LT···CE)
150: Width 150mm (applicable to LT···CE)

130: Width 130mm (applicable to LT···LD
170: Width 170mm (applicable to LT···LD and LT···H)

3 Specification of thrust and speed

G : High thrust (high speed) specification
V : High speed specification
For application of respective specifications, please see Table 1.
No symbol

Table 1 Application of thrust force and speed symbols

Model	Size	Thrust / speed specification		
		G	V	No symbol
LT···CE	100	○	–	–
	150	○	–	–
LT···LD	130	○	–	–
	170	○	○	–
LT···H	170	–	–	○

4 Shape of moving table

S: Standard
F: With flange

When selecting S, set "No symbol" in the entry of section ❽ "Designation of cover".
When selecting F, select D in the entry of section ❽ "Designation of cover".

5 Stroke length

Select a stroke length from the list of Table 2.

Table 2 Stroke length

Model and size	Stroke length mm
LT100CEG (S, F)	200, 400, 600, 800, 1 000
LT100CEG (S, F)···/T2	230, 430, 630, 830
LT150CEG (S, F)	400, 600, 800, 1 000, 1 200
LT150CEG (S, F)···/T2	350, 550, 750, 950
LT130LDGS	240, 720, 1 200, 1 680, 2 160, 2 640, 2 760
LT130LDGS···/T2	500, 980, 1 460, 1 940, 2 420, 2 540
LT130LDGF	240, 720, 1 200, 1 680
LT130LDGF···/T2	500, 980, 1 460
LT170LD (G, V)S	680, 1 160, 1 640, 2 120, 2 600, 2 720
LT170LD (G, V)S···/T2	420, 900, 1 380, 1 860, 2 340, 2 460
LT170LD (G, V)F	680, 1 160, 1 640
LT170LD (G, V)F···/T2	420, 900, 1 380
LT170HS	650, 1 130, 1 610, 2 090, 2 570, 2 670
LT170HS···T2	410, 890, 1 370, 1 850, 2 330, 2 430
LT170HF	650, 1 130, 1 610
LT170HF···T2	410, 890, 1 370

6 Resolution

1: 0.1 μm
5: 0.5 μm
10: 1.0 μm

7 Cooling type

No symbol: Natural air cooling
CA : Air cooling (applicable to LT···H)

8 Designation of cover

No symbol: Without cover (applicable to standard moving table)
D : With cover (applicable to moving table with flange)

9 Designation of sensor

No symbol: Without sensor
SC : Sensor (limit and pre-origin), with sensor rail (applicable to LT···CE)

LT···LD and LT···H have a sensor built-in. For the entry of section ❾, set "No symbol".

10 Specification of moving table

No symbol: Single table
T2 : Twin table

11 Specification number

1 : Specification number 1

The specification number is limited to 1.

1N=0.102kgf=0.2248lbs.
1mm=0.03937inch

Specifications

Table 3 LT···CE performance

Item	Model and size	LT100CEG			LT150CEG		
Maximum thrust(1)	N	120			350		
Rated thrust	N	15			60		
Maximum load mass	kg	12			35		
Resolution	μm	0.1	0.5	1.0	0.1	0.5	1.0
Maximum speed(2)	mm/s	700	2 000	2 000	700	2 000	2 000
Positioning repeatability(3)	μm	±0.5	±0.5	±1.0	±0.5	±0.5	±1.0

Notes (1) The duration of maximum thrust is up to 1 second.
(2) This speed may not be reached depending on the max. output frequency of the controller used.
(3) When the temperature of the product is constant.

Table 4 LT···LD performance

Item	Model and size	LT130LDG			LT170LDG			LT170LDV		
Maximum thrust(1)	N	120			350			145		
Rated thrust	N	15			60			25		
Maximum load mass	kg	12			35			20		
Resolution	μm	0.1	0.5	1.0	0.1	0.5	1.0	0.1	0.5	1.0
Maximum speed(2)	mm/s	700	2 000	3 000	700	2 000	2 000	700	2 000	3 000
Positioning repeatability(3)	μm	±0.5	±0.5	±1.0	±0.5	±0.5	±1.0	±0.5	±0.5	±1.0

Notes (1) The duration of maximum thrust is up to 1 second.
(2) This speed may not be reached depending on the max. output frequency of the controller used.
(3) When the temperature of the product is constant.

Table 5 LT···H performance

Item	Model and size	LT170H		
Maximum thrust(1)	N	900		
Rated thrust(2)	Natural air cooling N	120		
	Air cooling (3) N	150		
Maximum load mass	kg	90		
Resolution	μm	0.1	0.5	1.0
Maximum speed (4) (5)	mm/s	700	1 500(2 000)	1 500(2 000)
Positioning repeatability(6)	μm	±0.5	±0.5	±1.0

Notes (1) The duration of maximum thrust is up to 1 second.
(2) In the case where the unit is fixed on a steel-made cradle under ambient temperature of 0 to 25℃. For more information, please see Fig. 12 on page Ⅱ-294.
(3) This is under air flow rate of 30NL/min.
(4) For the speed exceeding 1,500mm/s, please contact IKO.
(5) This speed may not be reached depending on the max. output frequency of the controller used.
(6) When the temperature of the product is constant.

■ Thrust characteristics of LT···CE

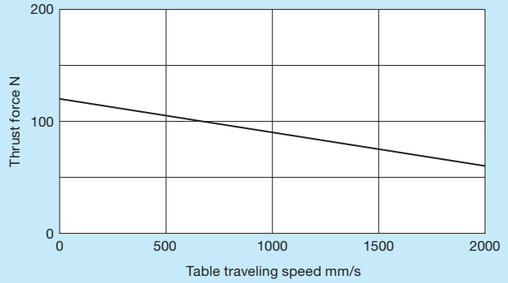

Fig.1 Thrust characteristics of LT100CEG

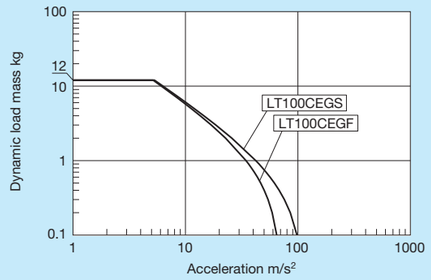

Fig. 2 Dynamic load mass of LT100CEG

Remark: These are values calculated based on the thrust force with table moving speed set to 1,000mm/s.

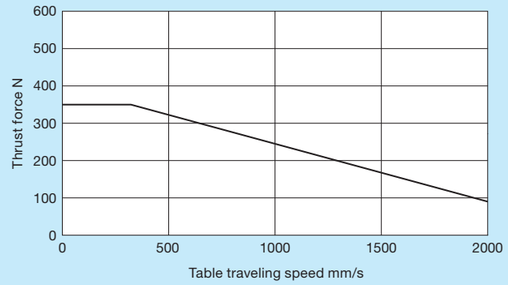

Fig. 3 Thrust characteristics of LT150CEG

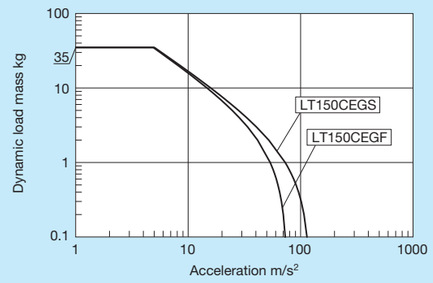

Fig.4 Dynamic load mass of LT150CEG

Remark: These are values calculated based on the thrust force with table moving speed set to 1,000mm/s.

1N=0.102kgf=0.2248lbs.
1mm=0.03937inch

■ Thrust characteristics of LT···LD

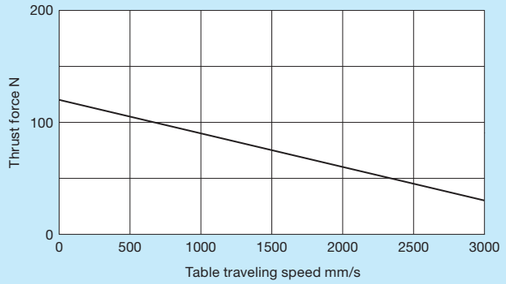

Fig. 5 Thrust characteristics of LT130LDG

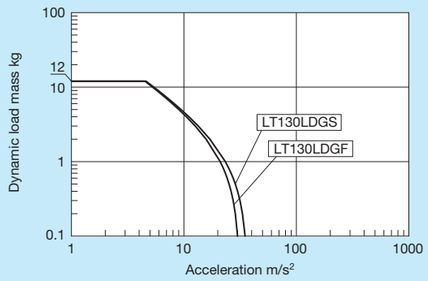

Fig. 6 Dynamic load mass of LT130LDG

Remark: These are values calculated based on the thrust force with table moving speed set to 1,000mm/s.

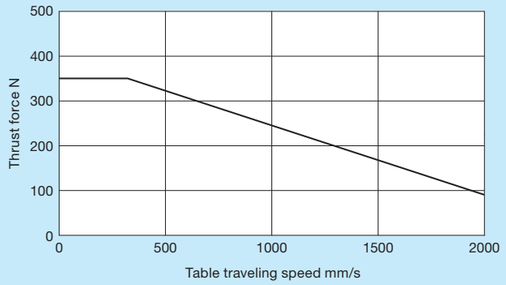

Fig. 7 Thrust characteristics of LT170LDG

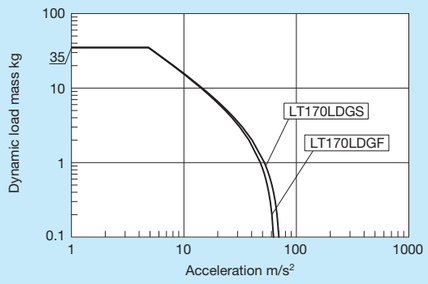

Fig. 8 Dynamic load mass of LT170LDG

Remark: These are values calculated based on the thrust force with table moving speed set to 1,000mm/s.

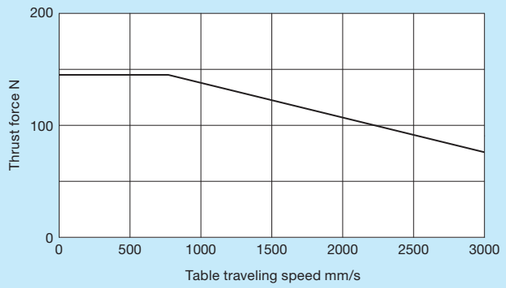

Fig. 9 Thrust characteristics of LT170LDV

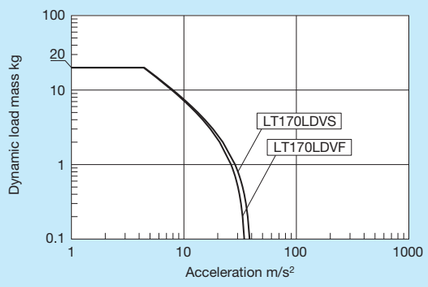

Fig. 10 Dynamic load mass of LT170LDV

Remark: These are values calculated based on the thrust force with table moving speed set to 1,000mm/s.

■ Thrust characteristics of LT···H

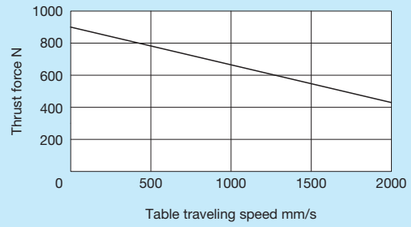

Fig. 11 Trust characteristics of LT170H

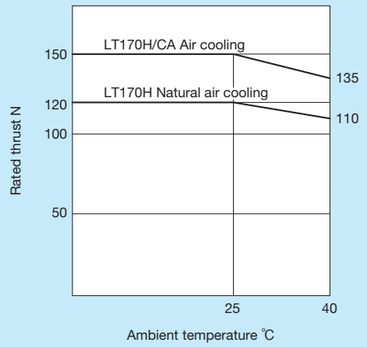

Fig. 12 Rated thrust characteristics of LT170H

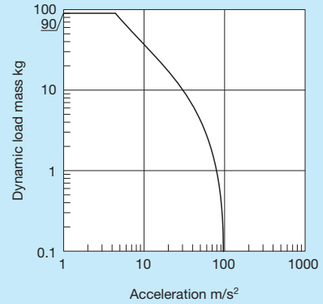

Fig. 13 Dynamic load mass of LT170H

Remark: These are values calculated based on the thrust force with table moving speed set to 1,000mm/s.

Mounting

For the processing accuracy of the Precision Positioning Table mounting surface and the tightening torque of the fixing screws, see page Ⅲ-29.

1N=0.102kgf=0.2248lbs.
1mm=0.03937inch

Sensor Specification

Table 6.1 Sensor timing chart for single table of LT···CE, LT···LD, and LT···H

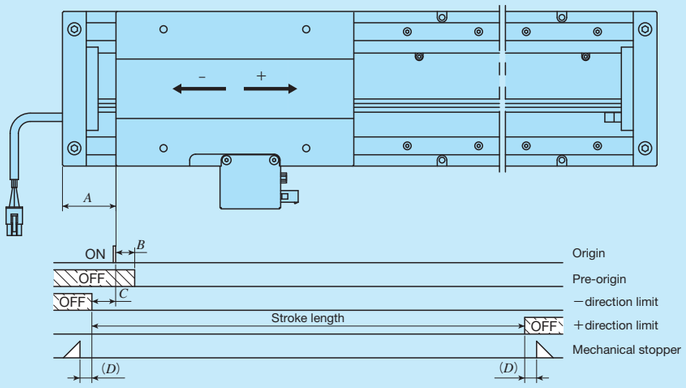

unit: mm

Model and size	A	B(1)	C(1)	D(1)
LT100CE···/SC	34	3	5	16
LT150CE···/SC	44	3	5	16
LT130LD	45	3	5	10
LT170LD	44	3	5	9
LT170H	92	3	17	20

Note (1) Respective values are for reference and are not guaranteed values. For detailed dimensions, please contact IKO.
Remark: For the specifications of respective sensors, please see the section of sensor specification in General Explanation.

Table 6.2 Sensor timing chart for twin tables of LT···CE, LT···LD, and LT···H

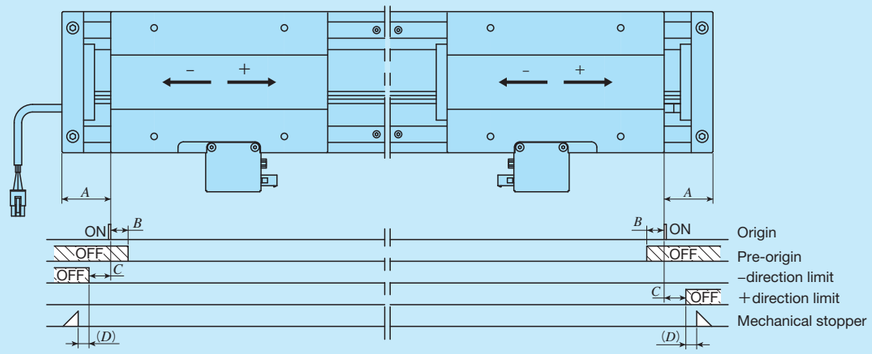

unit: mm

Model and size	A	B(1)	C(1)	D(1)
LT100CE···/SCT2	34	3	5	16
LT150CE···/SCT2	44	3	5	16
LT130LD···/T2	45	3	5	10
LT170LD···/T2	44	3	5	9
LT170H ···/T2	92	3	17	20

Note (1) Respective values are for reference and are not guaranteed values. For detailed dimensions, please contact IKO.
Remark: For the specifications of respective sensors, please see the section of sensor specification in General Explanation.

System Configuration

ADVA is available as a dedicated driver for Linear Motor Table LT; for its system configuration there are two available specification types, pulse train specification and high speed network EtherCAT specification. Table 7 shows an example of identification number for ADVA, and Table 8 shows its system configuration. For detailed ADVA specifications, see the driver specifications on pages Ⅱ-361 to Ⅱ-362.
Please also note that the driver (MR-J4-10B made by Mitsubishi Electric Corporation) compatible with SSCNET III/H and that compatible with MECHATROLINK (Σ-7 Series AC servo amplifier made by Yaskawa Electric Corporation) will be prepared based on usage. If needed, please contact IKO.

Table 7 Identification number for ADVA

ADVA	–	01NL	EC	/	LT100CEG
(1) Model		(2)	(3)		(4)

(2) Power supply voltage/maximum applicable motor capacity	
01NL	Single-phase / Three-phase 200 V, 100 W (Applicable to LT···CE, LT···LD)
08NL	Single-phase / Three-phase 200 V, 750 W (Applicable to LT170H)

(3) Command type	
No symbol	Pulse train command
EC	EtherCAT

(4) Applicable Linear Motor Table model	
LT100CEG	LT100CEG
LT150CEG	LT150CEG
LT130LDG	LT130LDG
LT170LDG	LT170LDG (high thrust specification)
LT170LDV	LT170LDV (high speed specification)
LT170H	LT170H

● Setup Software

When operating Linear Motor Table LT through ADVA, initial setting of driver parameters is required. Parameter setting for driver is performed using the setup software. It can also be used for gain adjustment and operational status check.
In the driver, the setup software and PC connection cable are not provided. These can be shared in plural drivers but at least 1 set is required. Please prepare these on your own or place an order separately according to your requirement.

●Motion Network

The ADVA driver for Linear Motor Drive Table LT supports motion network EtherCAT.
Motion network realizes higher performance and higher accuracy of devices free from pulse frequency constraint in pulse train command, noise effects in analog command (voltage command), voltage drop due to cable length and effects of temperature drifting. Reduction of wiring can also be achieved, so synchronization system with more than one table can easily be established.

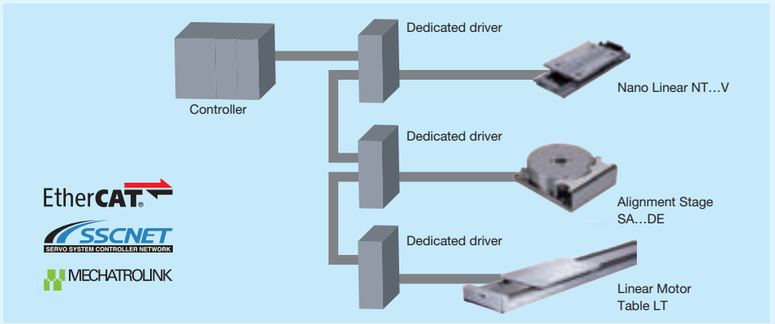

Remark: Please also note that the driver (MR-J4-10B made by Mitsubishi Electric Corporation) compatible with SSCNET Ⅲ/H and that compatible with MECHATROLINK (Σ-7 Series AC servo amplifier made by Yaskawa Electric Corporation) will be prepared based on usage. If needed, please contact IKO.

Model	Features
EtherCAT	This is an Ethernet-based open network communication system developed by Beckhoff of Germany, allowing real time control. High speed communication and high accuracy inter-node synchronization provide higher performance and higher accuracy of devices. In addition, Ethernet cables available on the market can be used and various wiring types can be supported.
SSCNET Ⅲ/H	This is a motion network communication system for servo system control developed by Mitsubishi Electric Corporation. It applies the optical fiber cables, so noise immunity is improved relative to conventional SSCNET.
MECHATROLINK	The open field network communication that connects the controller and various components. Developed by Yaskawa Electric Corporation and managed by MECHATROLINK Members Association.

System Configuration

Table 8 System configuration for LT with driver ADVA (···EC)

● Example of system configuration for single table

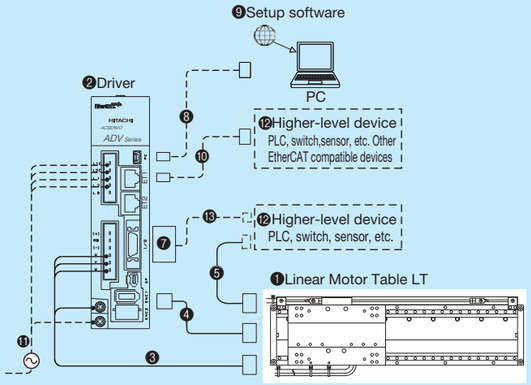

● Example of system configuration for twin table

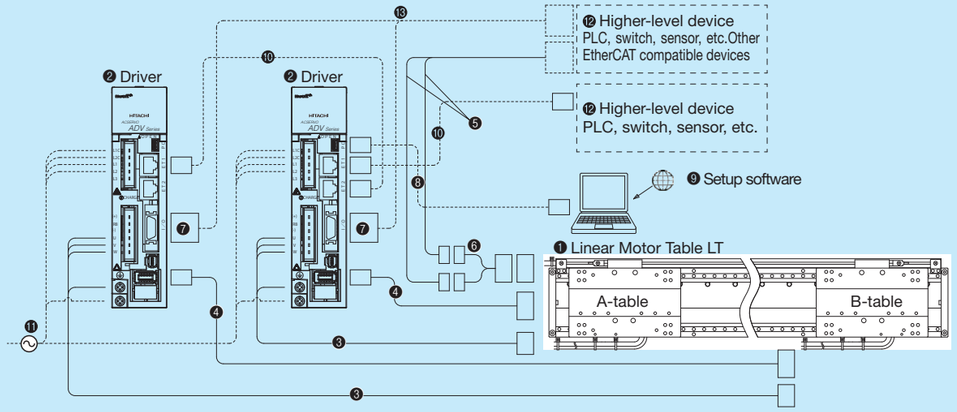

No.	Name	Identification number
❶	Linear motor table	Please see pages of Ⅱ-298 to Ⅱ-308.
❷	Driver	Please see Table 8 to select suitable driver for Linear Motor Table model.
❸	Motor extension cord	TAE20V7-AM□□ (applicable to LT···CE, LT···LD)
		TAE20V9-AM□□ (applicable to LT···H)
❹	Encoder extension cord	TAE20V8-EC□□ (applicable to LT···CE, LT···LD)
		TAE20W0-EC□□ (applicable to LT···H)
❺	Sensor extension cord (3)	TAE10V8-LC□□
❻	Limit branch cord (0.1m)	TAE20V2-BC
❼	I/O connector	TAE20R5-CN(1) (applicable to driver for pulse train command)
		TAE20V5-CN(2) (applicable to driver for EtherCAT)
❽	PC connection cable	USB mini B cable This must be prepared by customer.
❾	Setup software	ProDriveNext Please download from the official website of Hitachi Industrial Equipment Systems Co., Ltd.
❿	Ethernet cable	This must be prepared by customer.
⓫	Power cord	
⓬	Higher-level device	
⓭	I/O connector connection cable	

Note (1) I/O connector TAE20R5-CN is a combined product of 10150-3000PE (connector) and 10350-52F0-008 (cover) from 3M Japan Limited.
(2) I/O connector TAE20V5-CN is a combined product of 10120-3000PE (connector) and 10320-52F0-008 (cover) from 3M Japan Limited.
(3) Signal lines #9 and #11 of the sensor extension cord for the B-table are not in use.
Remark The lengths of motor extension cord, encoder extension cord, and sensor extension cord are specified in the □□ located at the end of the identification number for length of 3 to 10m in units of 1m.
The cord length is specified in two digits even when the length is less than 10m. (For 3m: TAE20V7-AM03)

IKO Linear Motor Table LT

LT100CEGS Single table

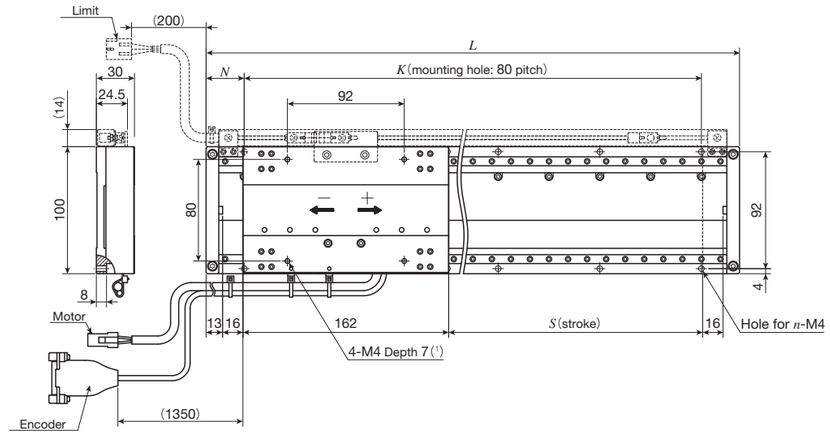

unit: mm

Identification number	Stroke length S(2)	Overall length L	Mounting holes of bed N	Mounting holes of bed K	Mounting holes of bed n	Total mass of table kg	Mass of moving table kg
LT100CEGS- 200	200	420	50	320	10	4.9	0.58
LT100CEGS- 400	400	620	30	560	16	6.9	
LT100CEGS- 600	600	820	50	720	20	9.0	
LT100CEGS- 800	800	1 020	30	960	26	11.1	
LT100CEGS-1000	1 000	1 220	50	1 120	30	13.1	

Notes (1) Too deep insertion depth of the mounting bolt may affect the running performance of the moving table, so never insert a bolt longer than the depth of the through hole.
(2) For other stroke lengths, please contact IKO.
Remark: Dashed line portions in the dimensional figures indicate the sensor-included specification / SC.

LT100CEGS/T2 Twin table

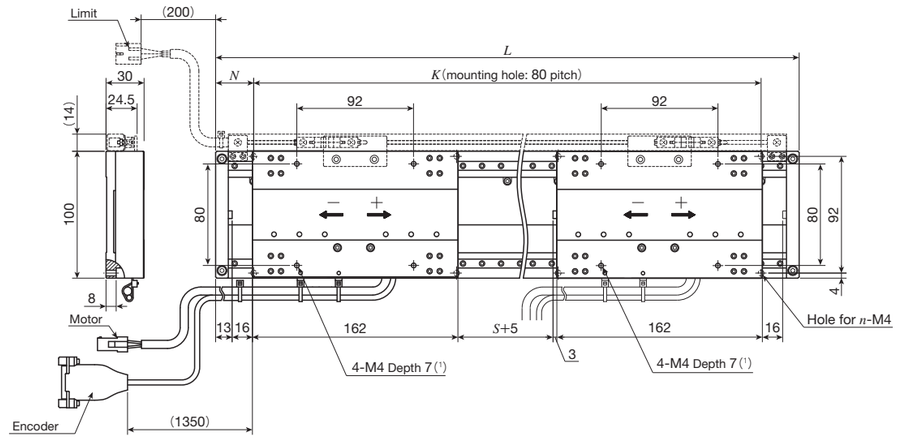

unit: mm

Identification number	Stroke length S(2)	Overall length L	Mounting holes of bed N	Mounting holes of bed K	Mounting holes of bed n	Total mass of table kg	Mass of moving table kg
LT100CEGS-230/T2	230	620	30	560	16	7.5	0.58
LT100CEGS-430/T2	430	820	50	720	20	9.6	
LT100CEGS-630/T2	630	1 020	30	960	26	11.7	
LT100CEGS-830/T2	830	1 220	50	1 120	30	13.7	

Notes (1) Too deep insertion depth of the mounting bolt may affect the running performance of the moving table, so never insert a bolt longer than the depth of the through hole.
(2) For other stroke lengths, please contact IKO.
Remark: Dashed line portions in the dimensional figures indicate the sensor-included specification / SC.

LT100CEGF/D Single table with cover

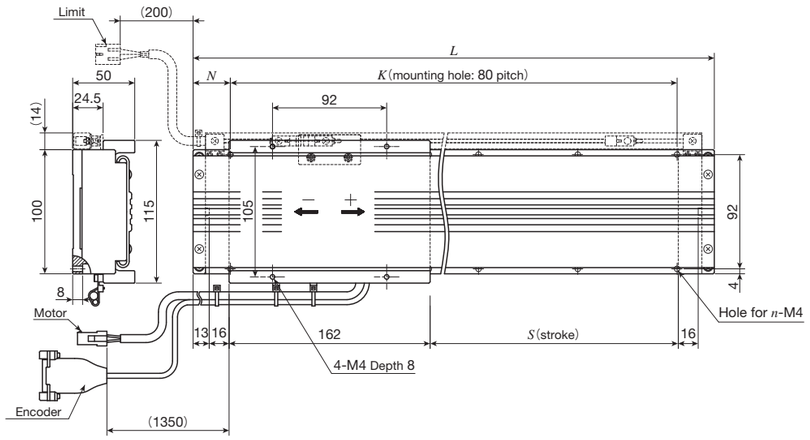

unit: mm

Identification number	Stroke length S(1)	Overall length L	Mounting holes of bed N	K	n	Total mass of table kg	Mass of moving table kg
LT100CEGF- 200/D	200	420	50	320	10	5.6	0.93
LT100CEGF- 400/D	400	620	30	560	16	7.8	
LT100CEGF- 600/D	600	820	50	720	20	10.0	
LT100CEGF- 800/D	800	1 020	30	960	26	12.2	
LT100CEGF-1000/D	1 000	1 220	50	1 120	30	14.4	

Note (1) For other stroke lengths, please contact IKO.
Remark: Dashed line portions in the dimensional figures indicate the sensor-included specification / SC.

LT100CEGF/DT2 Twin table with cover

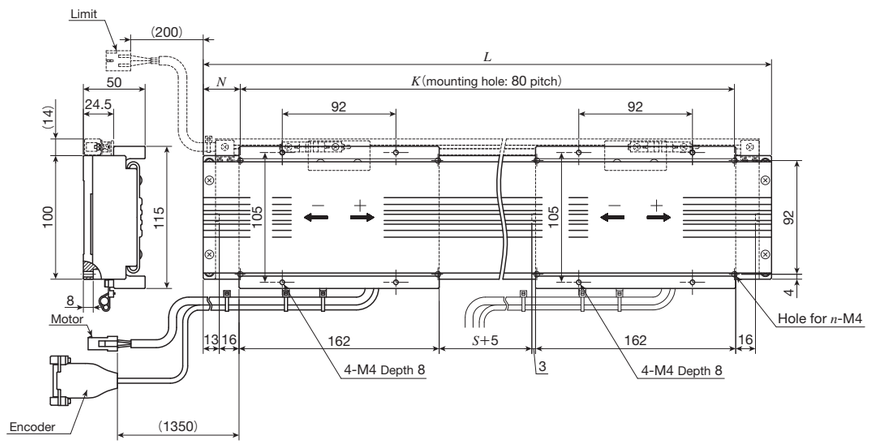

unit: mm

Identification number	Stroke length S(1)	Overall length L	Mounting holes of bed N	K	n	Total mass of table kg	Mass of moving table kg
LT100CEGF-230/DT2	230	620	30	560	16	8.7	0.93
LT100CEGF-430/DT2	430	820	50	720	20	10.9	
LT100CEGF-630/DT2	630	1 020	30	960	26	13.2	
LT100CEGF-830/DT2	830	1 220	50	1 120	30	15.4	

Note (1) For other stroke lengths, please contact IKO.
Remark: Dashed line portions in the dimensional figures indicate the sensor-included specification / SC.

LT150CEGS Single table

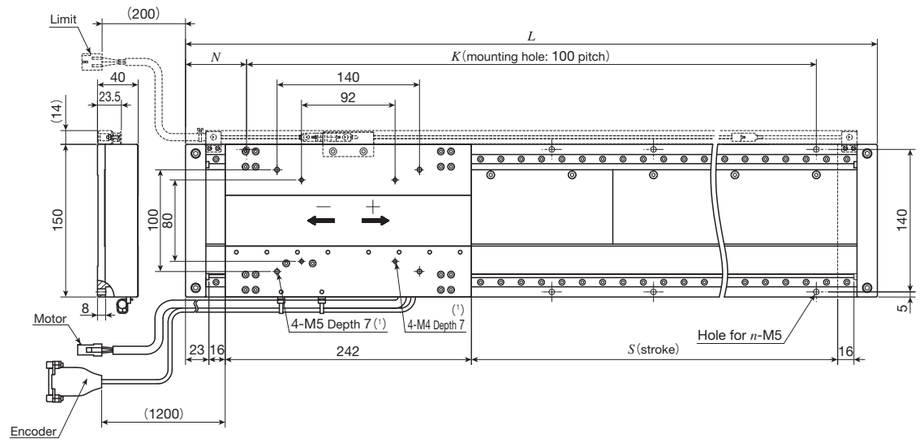

unit: mm

Identification number	Stroke length S(2)	Overall length L	Mounting holes of bed N	K	n	Total mass of table kg	Mass of moving table kg
LT150CEGS- 400	400	720	60	600	14	12.4	1.5
LT150CEGS- 600	600	920	60	800	18	15.5	
LT150CEGS- 800	800	1 120	60	1 000	22	18.6	
LT150CEGS-1000	1 000	1 320	60	1 200	26	21.6	
LT150CEGS-1200	1 200	1 520	60	1 400	30	24.7	

Notes (1) Too deep insertion depth of the mounting bolt may affect the running performance of the moving table, so never insert a bolt longer than the depth of the through hole.
(2) For other stroke lengths, please contact IKO.
Remark: Dashed line portions in the dimensional figures indicate the sensor-included specification / SC.

LT150CEGS/T2 Twin table

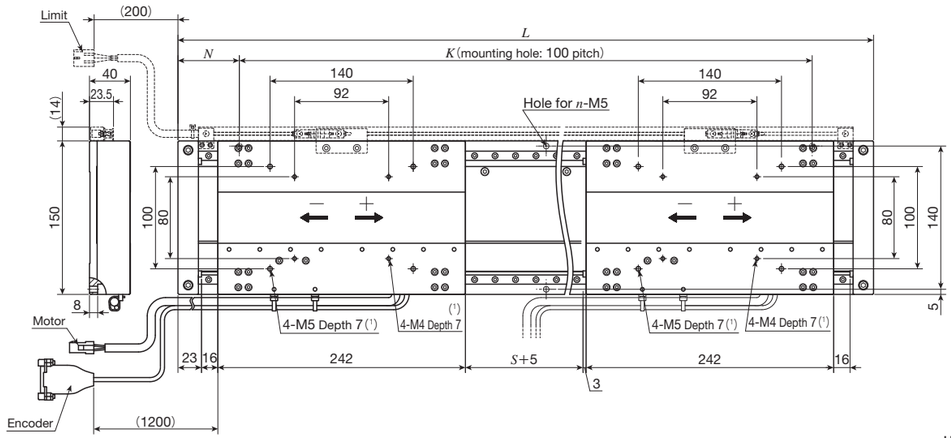

unit: mm

Identification number	Stroke length S(2)	Overall length L	Mounting holes of bed N	K	n	Total mass of table kg	Mass of moving table kg
LT150CEGS-350/T2	350	920	60	800	18	17.0	1.5
LT150CEGS-550/T2	550	1 120	60	1 000	22	20.1	
LT150CEGS-750/T2	750	1 320	60	1 200	26	23.1	
LT150CEGS-950/T2	950	1 520	60	1 400	30	26.2	

Notes (1) Too deep insertion depth of the mounting bolt may affect the running performance of the moving table, so never insert a bolt longer than the depth of the through hole.
(2) For other stroke lengths, please contact IKO.
Remark: Dashed line portions in the dimensional figures indicate the sensor-included specification / SC.

1N=0.102kgf=0.2248lbs.
1mm=0.03937inch

LT150CEGF/D Single table with cover

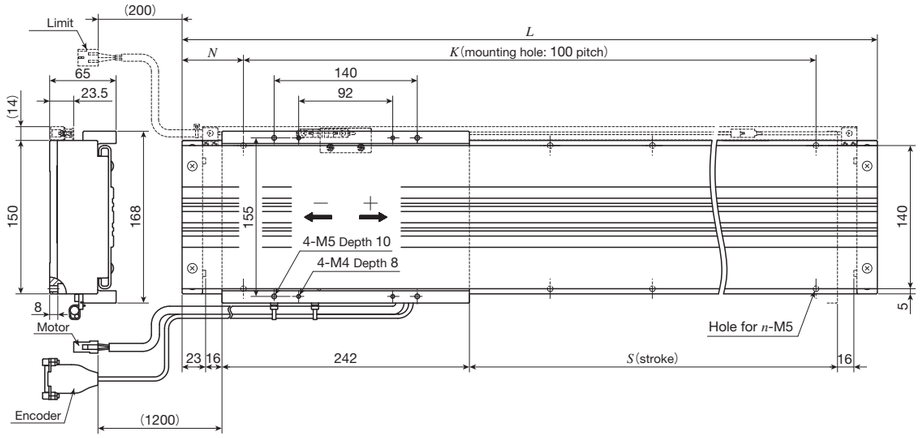

unit: mm

Identification number	Stroke length S(1)	Overall length L	Mounting holes of bed N	Mounting holes of bed K	Mounting holes of bed n	Total mass of table kg	Mass of moving table kg
LT150CEGF- 400/D	400	720	60	600	14	14.8	2.4
LT150CEGF- 600/D	600	920	60	800	18	18.1	
LT150CEGF- 800/D	800	1 120	60	1 000	22	21.5	
LT150CEGF-1000/D	1 000	1 320	60	1 200	26	24.8	
LT150CEGF-1200/D	1 200	1 520	60	1 400	30	28.2	

Note (1) For other stroke lengths, please contact IKO.
Remark: Dashed line portions in the dimensional figures indicate the sensor-included specification / SC.

LT150CEGF/DT2 Twin table with cover

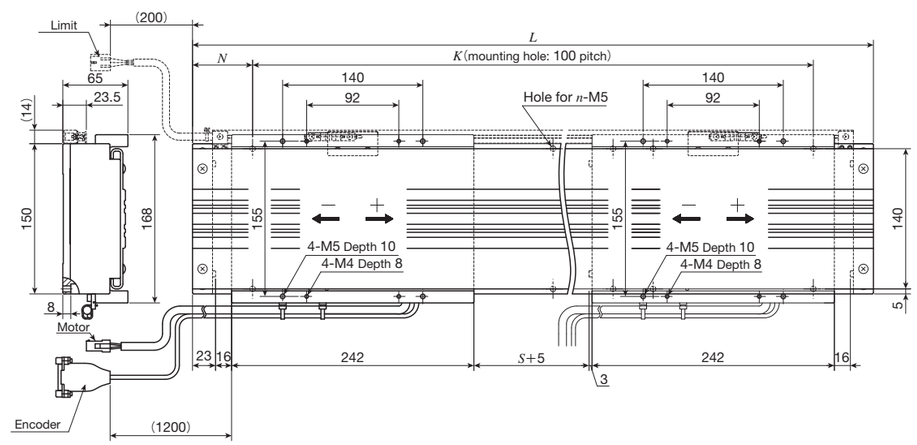

unit: mm

Identification number	Stroke length S(1)	Overall length L	Mounting holes of bed N	Mounting holes of bed K	Mounting holes of bed n	Total mass of table kg	Mass of moving table kg
LT150CEGF-350/DT2	350	920	60	800	18	20.5	2.4
LT150CEGF-550/DT2	550	1120	60	1000	22	23.9	
LT150CEGF-750/DT2	750	1320	60	1200	26	27.3	
LT150CEGF-950/DT2	950	1520	60	1400	30	30.6	

Note (1) For other stroke lengths, please contact IKO.
Remark: Dashed line portions in the dimensional figures indicate the sensor-included specification / SC.

LT130LDGS Single table

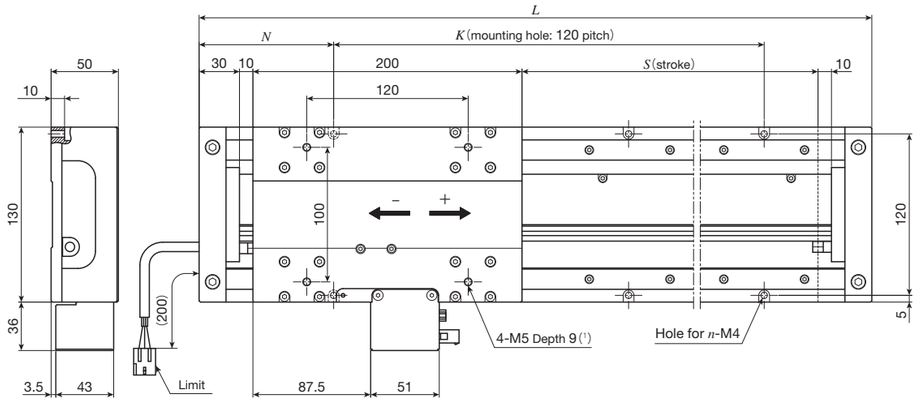

unit: mm

Identification number	Stroke length S(2)	Overall length L	Mounting holes of bed N	Mounting holes of bed K	Mounting holes of bed n	Total mass of table kg	Mass of moving table kg
LT130LDGS- 240	240	520	80	360	8	7.6	1.7
LT130LDGS- 720	720	1 000	80	840	16	13.5	
LT130LDGS-1200	1 200	1 480	80	1320	24	19.4	
LT130LDGS-1680	1 680	1 960	80	1800	32	25.3	
LT130LDGS-2160	2 160	2 440	80	2280	40	31.2	
LT130LDGS-2640	2 640	2 920	80	2760	48	37.1	
LT130LDGS-2760	2 760	3 040	80	2880	50	38.6	

Notes (1) Too deep insertion depth of the mounting bolt may affect the running performance of the moving table, so never insert a bolt longer than the depth of the through hole.
(2) For other stroke lengths, please contact IKO.

LT130LDGS/T2 Twin table

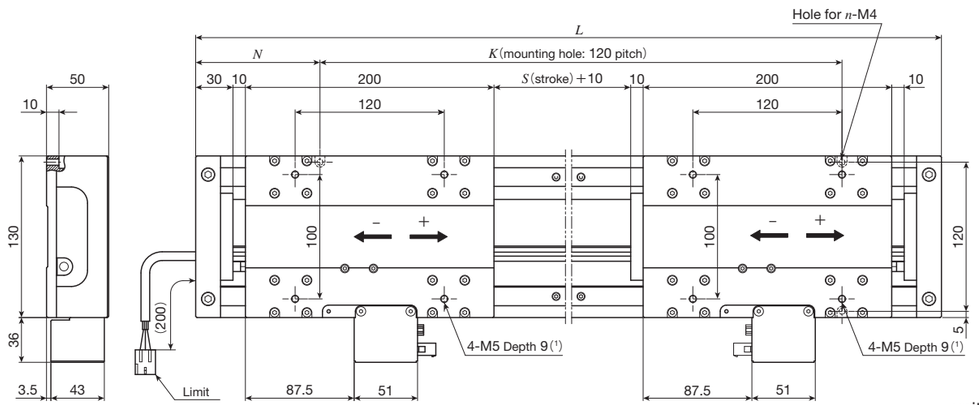

unit: mm

Identification number	Stroke length S(2)	Overall length L	Mounting holes of bed N	Mounting holes of bed K	Mounting holes of bed n	Total mass of table kg	Mass of moving table kg
LT130LDGS- 500/T2	500	1 000	80	840	16	15.2	1.7
LT130LDGS- 980/T2	980	1 480	80	1 320	24	21.1	
LT130LDGS-1460/T2	1 460	1 960	80	1 800	32	27.0	
LT130LDGS-1940/T2	1 940	2 440	80	2 280	40	32.9	
LT130LDGS-2420/T2	2 420	2 920	80	2 760	48	38.8	
LT130LDGS-2540/T2	2 540	3 040	80	2 880	50	40.3	

Notes (1) Too deep insertion depth of the mounting bolt may affect the running performance of the moving table, so never insert a bolt longer than the depth of the through hole.
(2) For other stroke lengths, please contact IKO.

1N=0.102kgf=0.2248lbs.
1mm=0.03937inch

LT130LDGF/D Single table with cover

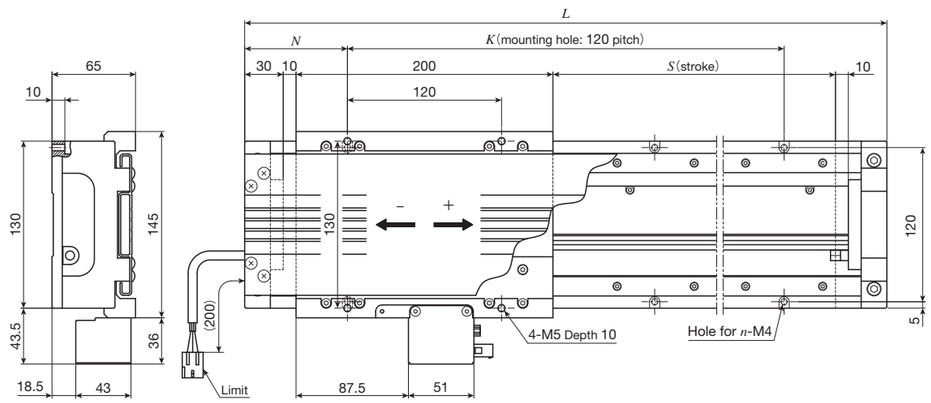

unit: mm

Identification number	Stroke length S(1)	Overall length L	Mounting holes of bed N	K	n	Total mass of table kg	Mass of moving table kg
LT130LDGF- 240/D	240	520	80	360	8	8.3	2.0
LT130LDGF- 720/D	720	1 000	80	840	16	14.6	
LT130LDGF-1200/D	1 200	1 480	80	1 320	24	20.9	
LT130LDGF-1680/D	1 680	1 960	80	1 800	32	27.2	

Note (1) For other stroke lengths, please contact IKO.

LT130LDGF/DT2 Twin table with cover

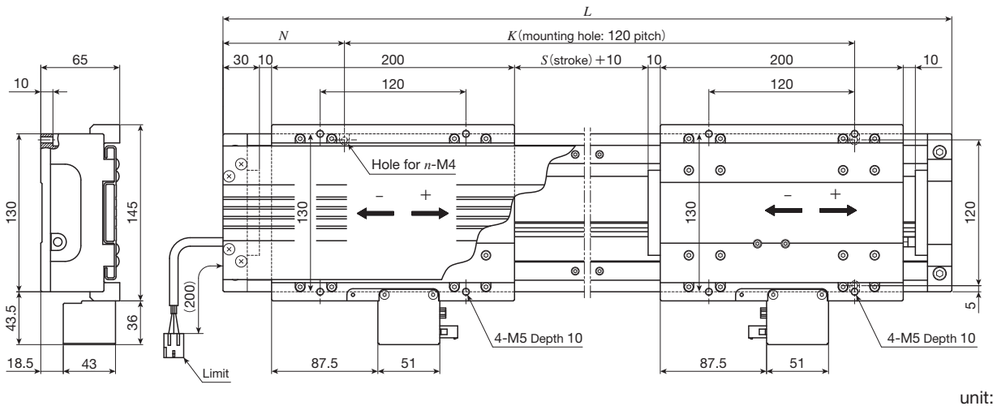

unit: mm

Identification number	Stroke length S(1)	Overall length L	Mounting holes of bed N	K	n	Total mass of table kg	Mass of moving table kg
LT130LDGF- 500/DT2	500	1 000	80	840	16	16.6	2.0
LT130LDGF- 980/DT2	980	1 480	80	1 320	24	22.8	
LT130LDGF-1460/DT2	1 460	1 960	80	1 800	32	29.1	

Note (1) For other stroke lengths, please contact IKO.

LT170LDGS Single table / High thrust specification
LT170LDVS Single table / High speed specification

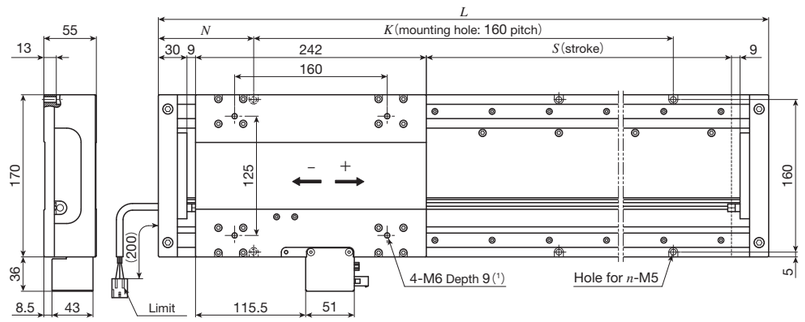

unit: mm

Identification number	Stroke length S(2)	Overall length L	Mounting holes of bed N	K	n	Total mass of table kg	Mass of moving table kg
LT170LDGS- 680 LT170LDVS- 680	680	1 000	100	800	12	22.6	2.5
LT170LDGS-1160 LT170LDVS-1160	1 160	1 480	100	1 280	18	32.7	
LT170LDGS-1640 LT170LDVS-1640	1 640	1 960	100	1 760	24	42.7	
LT170LDGS-2120 LT170LDVS-2120	2 120	2 440	100	2 240	30	52.8	
LT170LDGS-2600 LT170LDVS-2600	2 600	2 920	100	2 720	36	62.9	
LT170LDGS-2720 LT170LDVS-2720	2 720	3 040	80	2 880	38	65.4	

Notes (1) Too deep insertion depth of the mounting bolt may affect the running performance of the moving table, so never insert a bolt longer than the depth of the through hole.
(2) For other stroke lengths, please contact IKO.

LT170LDGS/T2 Twin table / High thrust specification
LT170LDVS/T2 Twin table / High speed specification

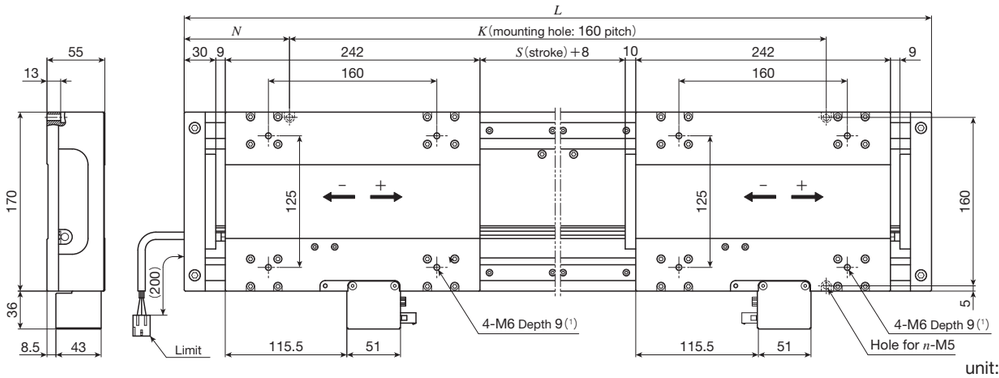

unit: mm

Identification number	Stroke length S(2)	Overall length L	Mounting holes of bed N	K	n	Total mass of table kg	Mass of moving table kg
LT170LDGS- 420/T2 LT170LDVS- 420/T2	420	1 000	100	800	12	25.1	2.5
LT170LDGS- 900/T2 LT170LDVS- 900/T2	900	1 480	100	1 280	18	35.2	
LT170LDGS-1380/T2 LT170LDVS-1380/T2	1 380	1 960	100	1 760	24	45.2	
LT170LDGS-1860/T2 LT170LDVS-1860/T2	1 860	2 440	100	2 240	30	55.3	
LT170LDGS-2340/T2 LT170LDVS-2340/T2	2 340	2 920	100	2 720	36	65.4	
LT170LDGS-2460/T2 LT170LDVS-2460/T2	2 460	3 040	80	2 880	38	67.9	

Notes (1) Too deep insertion depth of the mounting bolt may affect the running performance of the moving table, so never insert a bolt longer than the depth of the through hole.
(2) For other stroke lengths, please contact IKO.

1N=0.102kgf=0.2248lbs.
1mm=0.03937inch

LT170LDGF/D Single table with cover / High thrust specification
LT170LDVF/D Single table with cover / High speed specification

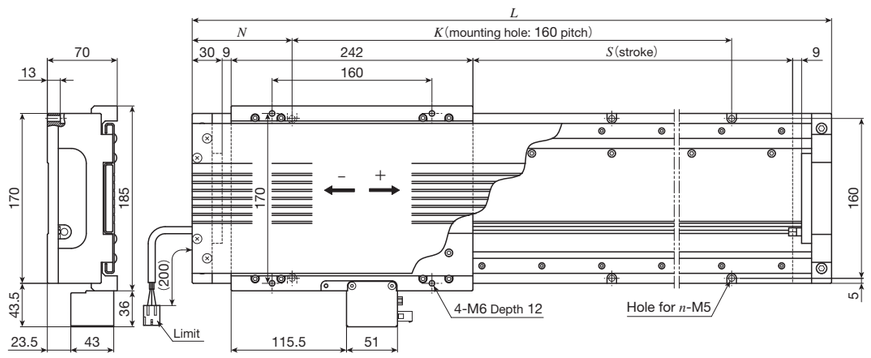

unit: mm

Identification number	Stroke length S(1)	Overall length L	Mounting holes of bed N	K	n	Total mass of table kg	Mass of moving table kg
LT170LDGF- 680/D LT170LDVF- 680/D	680	1 000	100	800	12	24.0	2.8
LT170LDGF-1160/D LT170LDVF-1160/D	1 160	1 480	100	1 280	18	34.6	
LT170LDGF-1640/D LT170LDVF-1640/D	1 640	1 960	100	1 760	24	45.2	

Note (1) For other stroke lengths, please contact IKO.

LT170LDGF/DT2 Twin table with cover / High thrust specification
LT170LDVF/DT2 Twin table with cover / High speed specification

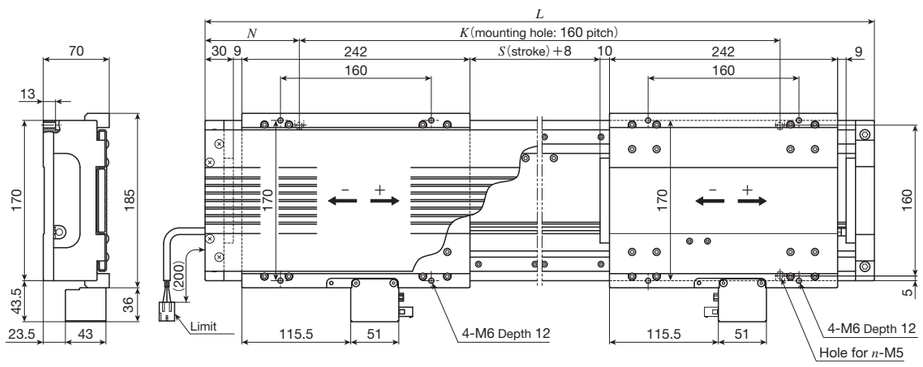

unit: mm

Identification number	Stroke length S(1)	Overall length L	Mounting holes of bed N	K	n	Total mass of table kg	Mass of moving table kg
LT170LDGF- 420/DT2 LT170LDVF- 420/DT2	420	1 000	100	800	12	26.9	2.8
LT170LDGF- 900/DT2 LT170LDVF- 900/DT2	900	1 480	100	1 280	18	37.5	
LT170LDGF-1380/DT2 LT170LDVF-1380/DT2	1 380	1 960	100	1 760	24	48.0	

Note (1) For other stroke lengths, please contact IKO.

LT170HS Single table

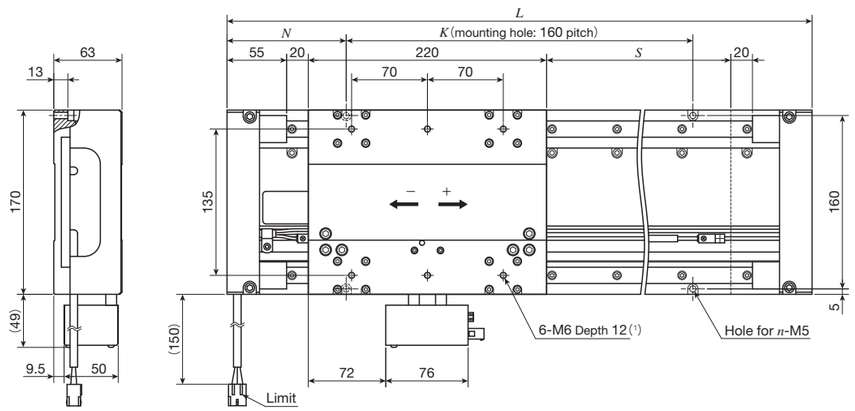

unit: mm

Identification number	Stroke length S(2)	Overall length L	Mounting holes of bed N	K	n	Total mass of table kg	Mass of moving table kg
LT170HS- 650	650	1 020	110	800	12	25.1	4.0
LT170HS-1130	1 130	1 500	110	1 280	18	34.9	
LT170HS-1610	1 610	1 980	110	1 760	24	44.6	
LT170HS-2090	2 090	2 460	110	2 240	30	54.4	
LT170HS-2570	2 570	2 940	110	2 720	36	64.1	
LT170HS-2670	2 670	3 040	80	2 880	38	66.4	

Notes (1) Too deep insertion depth of the mounting bolt may affect the running performance of the moving table, so never insert a bolt longer than the depth of the through hole.
(2) For other stroke lengths, please contact IKO.

LT170HS/T2 Twin table

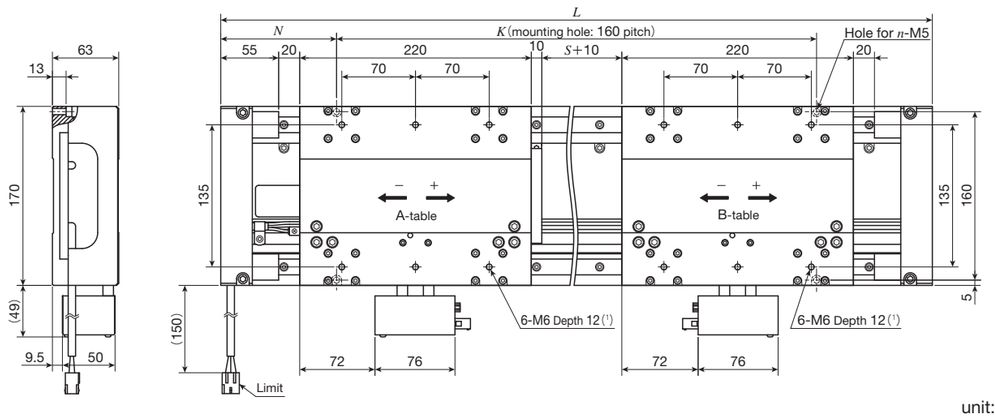

unit: mm

Identification number	Stroke length S(2)	Overall length L	Mounting holes of bed N	K	n	Total mass of table kg	Mass of moving table kg
LT170HS- 410/T2	410	1 020	110	800	12	29.1	4.0
LT170HS- 890/T2	890	1 500	110	1280	18	38.9	
LT170HS-1370/T2	1 370	1 980	110	1760	24	48.6	
LT170HS-1850/T2	1 850	2 460	110	2240	30	58.4	
LT170HS-2330/T2	2 330	2 940	110	2720	36	68.1	
LT170HS-2430/T2	2 430	3 040	80	2880	38	70.4	

Notes (1) Too deep insertion depth of the mounting bolt may affect the running performance of the moving table, so never insert a bolt longer than the depth of the through hole.
(2) For other stroke lengths, please contact IKO.

1N=0.102kgf=0.2248lbs.
1mm=0.03937inch

LT170HF/D Single table with cover

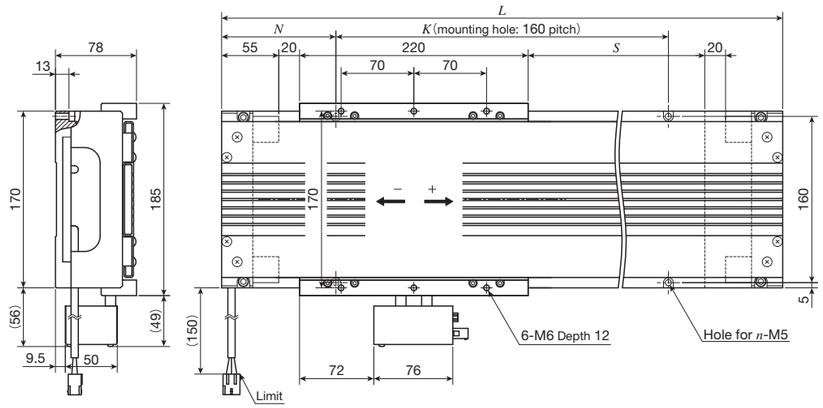

unit: mm

Identification number	Stroke length S(1)	Overall length L	Mounting holes of bed N	Mounting holes of bed K	Mounting holes of bed n	Total mass of table kg	Mass of moving table kg
LT170HF- 650/D	650	1 020	110	800	12	25.5	4.4
LT170HF-1130/D	1 130	1 500	110	1 280	18	35.2	
LT170HF-1610/D	1 610	1 980	110	1 760	24	45.0	

Note (1) For other stroke lengths, please contact IKO.

LT170HF/DT2 Twin table with cover

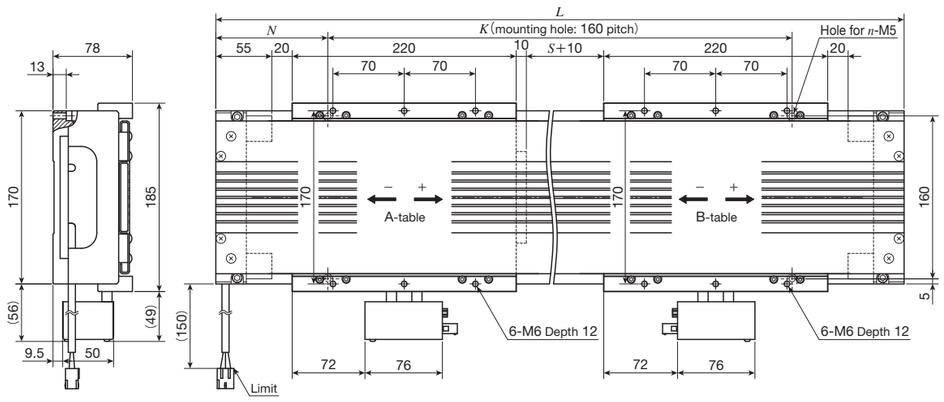

unit: mm

Identification number	Stroke length S(1)	Overall length L	Mounting holes of bed N	Mounting holes of bed K	Mounting holes of bed n	Total mass of table kg	Mass of moving table kg
LT170HF- 410/DT2	410	1 020	110	800	12	29.9	4.4
LT170HF- 890/DT2	890	1 500	110	1 280	18	39.6	
LT170HF-1370/DT2	1 370	1 980	110	1 760	24	49.4	

Note (1) For other stroke lengths, please contact IKO.

1N=0.102kgf=0.2248lbs.
1mm=0.03937inch

AT

AT

Ball screw

Rotation

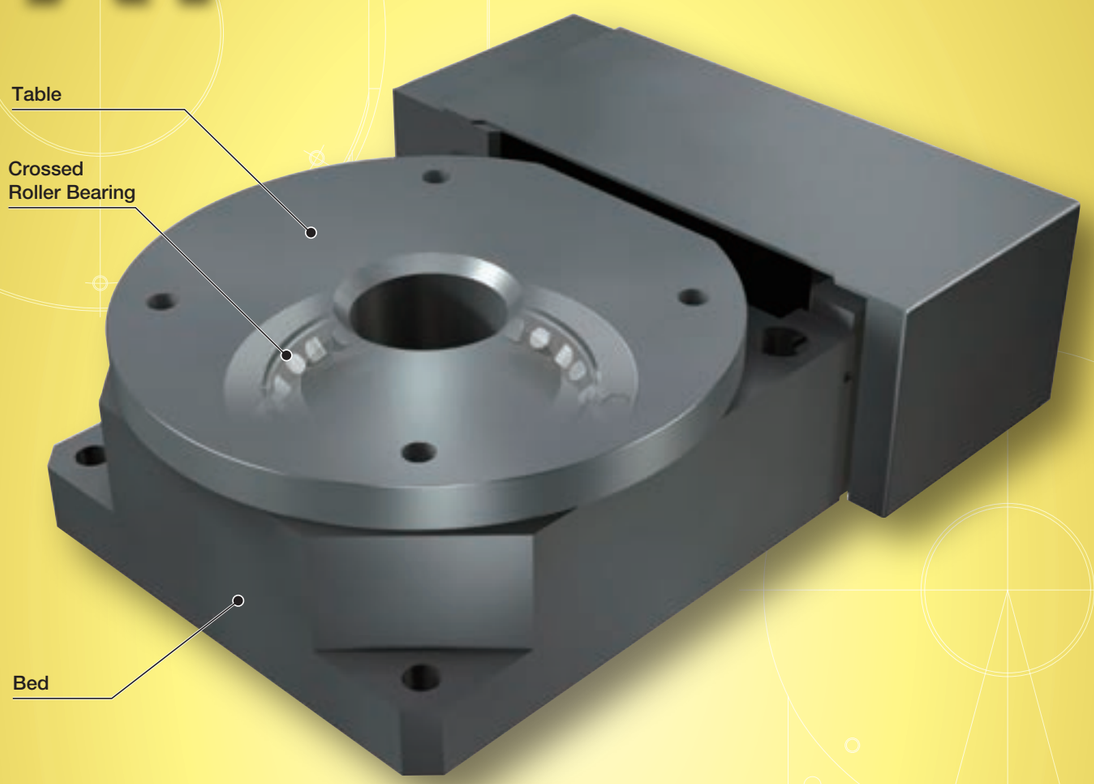

Major product specifications

Driving method	Precision ball screw
Linear motion rolling guide and bearing	Linear Way (ball type) Crossed Roller Bearing
Built-in lubrication part	No built-in
Material of table and bed	High carbon steel
Sensor	Provided as standard

Accuracy

unit: sec

Positioning repeatability	±1
Positioning accuracy	–
Lost motion	–
Parallelism in table motion A	–
Parallelism in table motion B	–
Attitude accuracy	–
Straightness	–
Backlash	–

Points

● Rotary positioning table for converting linear motion to rotary motion

1 This is a positioning table that allows precise angle correction by converting the linear motion to the rotational motion through the rotator mechanism combining the Linear Way and ball screws.High rigidity steel-made table and bed are used and a Crossed Roller Bearing is incorporated in the bearing supporting the table.

● Low profile design with high rigidity

2 Adoption of Crossed Roller Bearing capable of exerting high rigidity in all direction has achieved low profile, high rigidity, and high precision.

● Positioning repeatability of ±1 sec

3 A rotator for converting linear motion to rotary motion is accurately guided by the combination of Linear Way L and precision ball screw, thus achieving the high positioning repeatability of ±1 sec.

● Available as multi-axis configured alignment table

4 Placing this unit on the slide table of Precision Positioning Table LH enables the configuration of low height XY-θ multi-axis positioning mechanism.

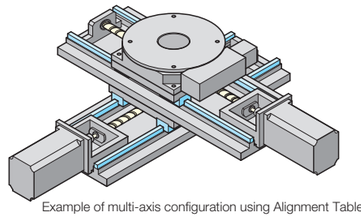

Example of multi-axis configuration using Alignment Table AT

Driving mechanism of Alignment Table AT

Alignment Table AT is driven by stroking a rotator linked to table's outer periphery by driving of ball screw in a linear direction. In order to adjust the distance L and angle from the center of table varied by rotator movement, linear and rotary motion mechanism that follows according to the table angle is incorporated in the rotator. Therefore, in Alignment Table, even when moving the rotator at a same pitch, the table's rotation angle tends to vary depending on the position, so that even when moving it at a constant speed, the rotation speed does not stay constant.

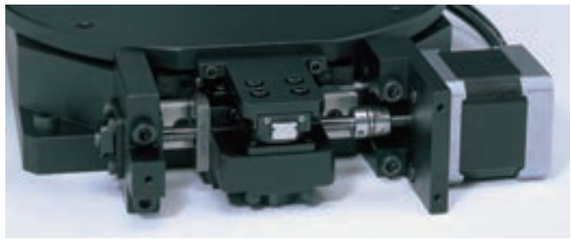

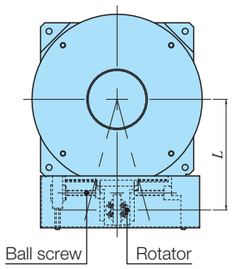

Distance from the center of table L unit: mm

Identification number	L
AT120	100
AT200	130
AT300	186

Variation

Shape	Model and size	Table diameter (mm)	Operating angle range (degree)
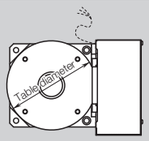	AT120	120	± 5
	AT200	200	
	AT300	300	±10

1N=0.102kgf=0.2248lbs.
1mm=0.03937inch

Identification Number

Example of an Identification Number

①	②	③	
AT	120	/	AT701

① **Model** Page Ⅱ-314

② **Size** Page Ⅱ-314

③ **Designation of motor attachment** Page Ⅱ-314

Identification Number and Specification

① Model

AT: Alignment Table AT

② Size

120: Table diameter 120mm
200: Table diameter 200mm
300: Table diameter 300mm

③ Designation of motor attachment

As for a motor attachment, select it from the list of Table 1.

- Motor should be prepared by customer.
- Please specify motor attachment applicable to motor for use.
- A coupling shown in Table 2 is temporarily fixed in the main body before shipment, so that final position adjustment should be performed by customer.

Table 1 Application of motor attachment

Models of motor to be used					Flange size mm	Motor attachment	
Type	Manufacturer	Series	Model	Rated output W		AT120 AT200	AT300
AC servo motor	YASKAWA ELECTRIC CORPORATION	Σ-V	SGMJV-A5A	50	□40	AT701	–
			SGMAV-A5A			AT701	–
			SGMJV-01A	100		AT701	AT702
			SGMAV-01A			AT701	AT702
	Mitsubishi Electric Corporation	J4	HG-MR053	50	□40	AT701	–
			HG-KR053			AT701	–
			HG-MR13	100		AT701	AT702
			HG-KR13			AT701	AT702
	Panasonic Corporation	MINAS A5	MSMD5A	50	□38	AT703	–
			MSME5A			AT703	–
			MSMD01	100		AT703	AT704
			MSME01			AT703	AT704
	Hitachi Industrial Equipment Systems Co., Ltd	AD	ADMA-R5L	50	□40	**AT701**	–
			ADMA-01L	100		**AT701**	**AT702**
Stepper motor	ORIENTAL MOTOR Co., Ltd.	α step	ARM46		□42	AT705	–
			ARM66		□60	–	AT706
			ARM69		□60	–	AT706
		CRK	CRK54		□42	AT707	–
			CRK56 (1)		□60	–	AT708

Note (1) Applicable to the outer diameter φ8 of motor output shaft.
Remark: For detailed motor specifications, please see respective motor manufacturer's catalog.

Table 2 Coupling models

Motor attachment	Coupling models	Manufacturer	Coupling inertia J_c $\times 10^{-5}$kg · m²
AT701	MSTS-16-5×8	Nabeya Bi-tech Kaisha	0.084
AT702	UA-25C-8×8	Sakai Manufacturing Co., Ltd	0.290
AT703	MSTS-16-5×8	Nabeya Bi-tech Kaisha	0.084
AT704	UA-25C-8×8	Sakai Manufacturing Co., Ltd	0.290
AT705	MSTS-16-5×6	Nabeya Bi-tech Kaisha	0.084
AT706	MSTS-25C-8×10	Nabeya Bi-tech Kaisha	0.71
AT707	MSTS-16-5×5	Nabeya Bi-tech Kaisha	0.084
AT708	MSTS-25C-8×8	Nabeya Bi-tech Kaisha	0.71

Remark: For detailed coupling specifications, please see respective manufacturer's catalog.

1N=0.102kgf=0.2248lbs.
1mm=0.03937inch

Specifications

Table 3 Specifications of ball screw unit: mm

Model and size	Shaft dia.	Overall length
AT120	6	103.5
AT200	6	103.5
AT300	10	183

Table 4 Specification

Item / Size	Ball screw lead mm	Rotator resolution μm	Operating angle rance degree	Positioning repeatability sec.	Table inertia J_T $\times 10^{-5}$kg·m^2	Starting torque T_S N·m
AT120	1	1(1)	± 5	±1	0.012	0.03
AT200					0.014	0.03
AT300	2	2(1)	±10		0.18	0.04

Note (1) This is a value given when fraction sizes of the motor are 1,000 pulses/rev.

Table 5 Maximum carrying mass unit: kg

Model and size	Maximum carrying mass
AT120	22
AT200	12
AT300	44

Remark: Applicable in both the horizontal and vertical directions.

Mounting

For the processing accuracy of the Precision Positioning Table mounting surface and the tightening torque of the fixing screws, see page Ⅲ-29.

Sensor specification

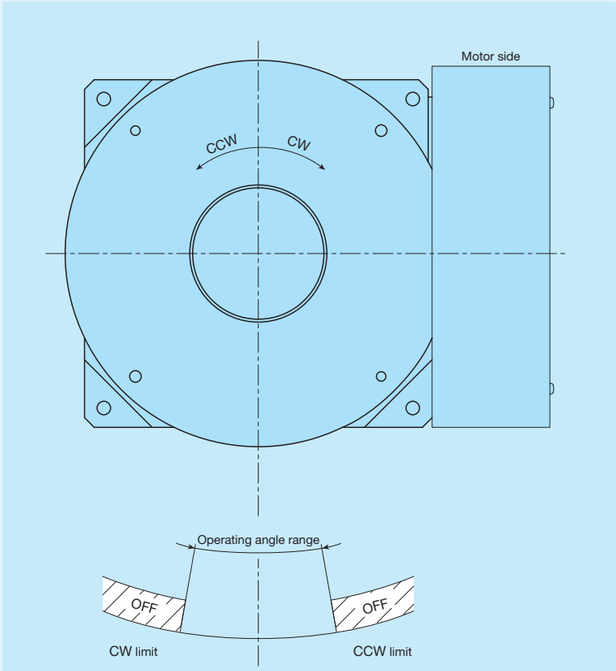

Fig. 1 Sensor timing chart

Example of Combination

■ Configuration of XY-θ multi-axis positioning mechanism

Combining the Alignment Table AT with IKO precision positioning table of single-axis specification or multi-axis specification enables you to easily configure the XY-θ multi-axis positioning mechanism. Low assembling height, compactness, and high-precision positioning capability enable the table to be used as alignment table for precision measuring equipment, inspection equipment, and assembling device.

Table 6 Configuration example of multi-axis positioning mechanism unit: mm

Appearance of multi-axis positioning mechanism	Models of IKO precision positioning tables combined with Alignment Table AT			Stroke length	
				X-axis	Y-axis
	Precision Positioning Table TS/CT	Single-axis specification	TS125/125	50	
			TS125/220	120	
			TS220/220	120	
			TS220/310	180	
			TS260/350	250	
		Two-axis specification	CT125/125	50	50
			CT220/220	120	120
			CT260/350	150	250
			CT350/350	250	250
		Single-axis specification	TSLH120M	100, 150	
				200	
				250	
				300	
			TSLH220M	150	
				200, 250, 300	
				400	
			TSLH320M	300	
				400, 500	
			TSLH420M	500	
				600	
				800	
	Precision Positioning Table LH	Two-axis specification	CTLH120M	100	100
				200	100
				200	200
				300	200
				300	300
			CTLH220M	200	200
				300	200
				300	300
				400	300
				400	400
			CTLH320M	300	300
				400	300
				400	400
				500	400
				500	500

1N=0.102kgf=0.2248lbs.
1mm=0.03937inch

Dimensions of Motor Attachment

AT120, AT200

AT701

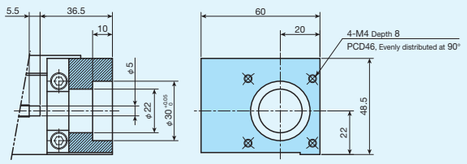

AT703

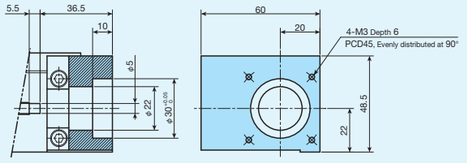

AT705
AT707

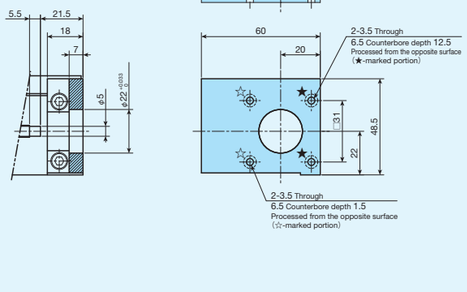

AT300

AT702

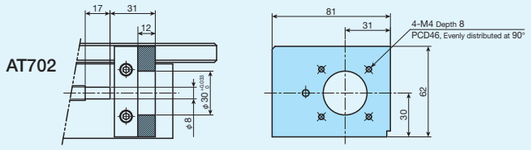

AT704

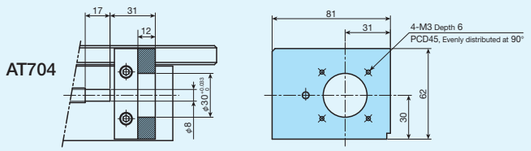

AT706
AT708

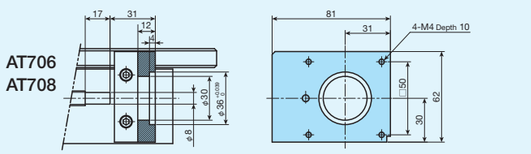

IKO Alignment Table AT

AT120

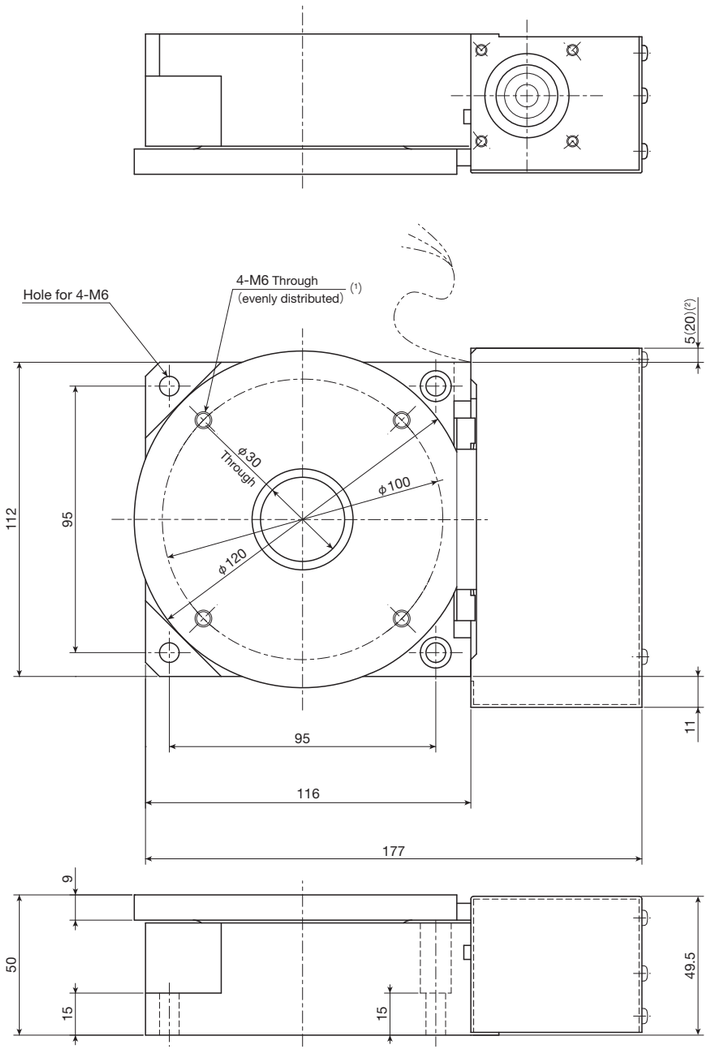

mass: 4.4kg

Notes (1) Too deep insertion depth of the mounting bolt may affect the rotation performance of the table, so never insert a bolt longer than the depth of the through hole.
(2) The dimension in ( ) is applicable to AT701 and AT703.

AT

1N=0.102kgf=0.2248lbs.
1mm=0.03937inch

AT200

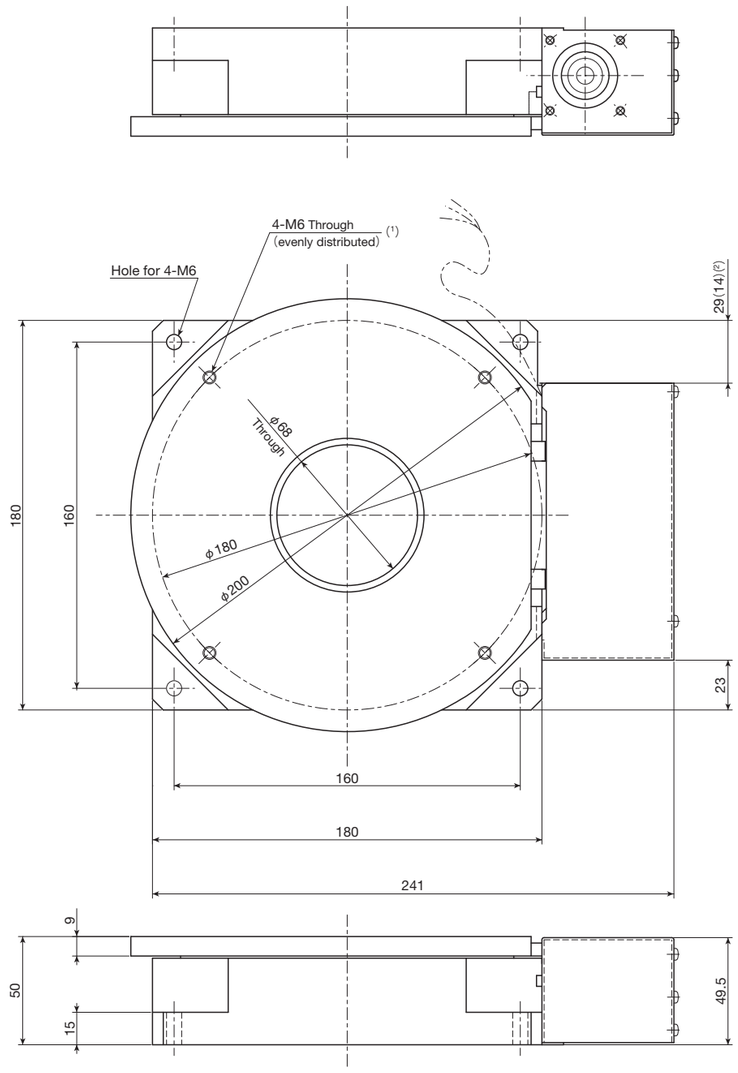

mass: 9.9kg

Notes (1) Too deep insertion depth of the mounting bolt may affect the rotation performance of the table, so never insert a bolt longer than the depth of the through hole.
(2) The dimension in ( ) is applicable to AT701 and AT703.

AT300

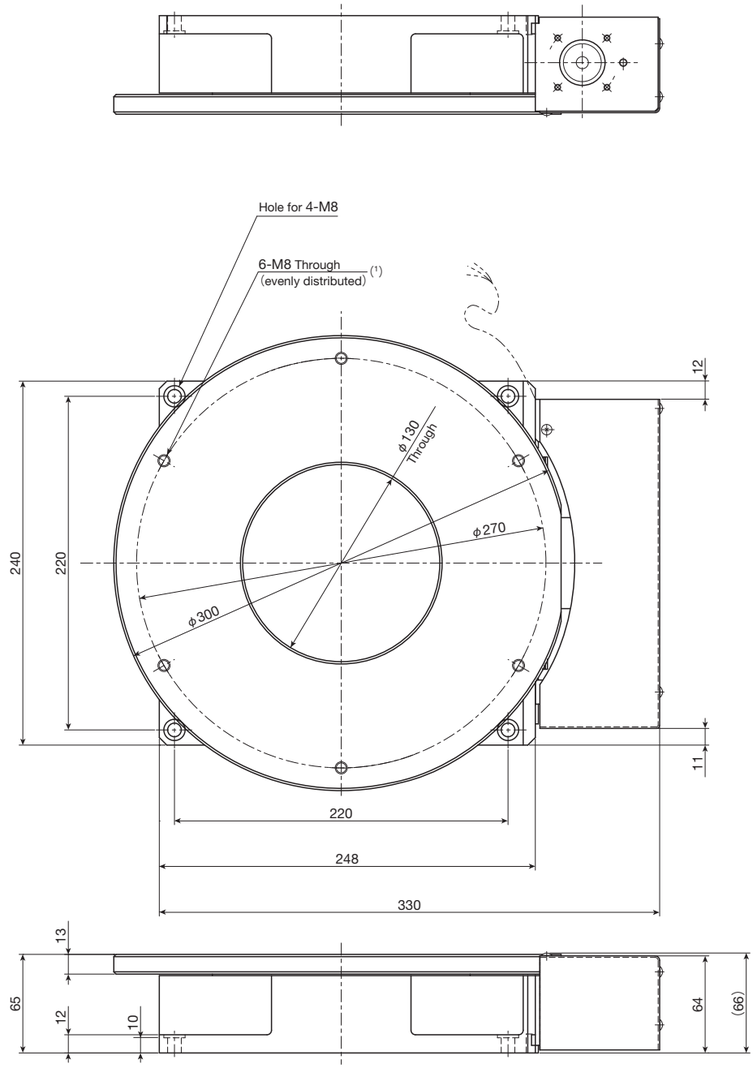

mass: 21.0kg

Note (1) Too deep insertion depth of the mounting bolt may affect the rotation performance of the table, so never insert a bolt longer than the depth of the through hole.

AT

1N=0.102kgf=0.2248lbs.
1mm=0.03937inch

SK…W

SK···W

Worm gear drive

Rotation

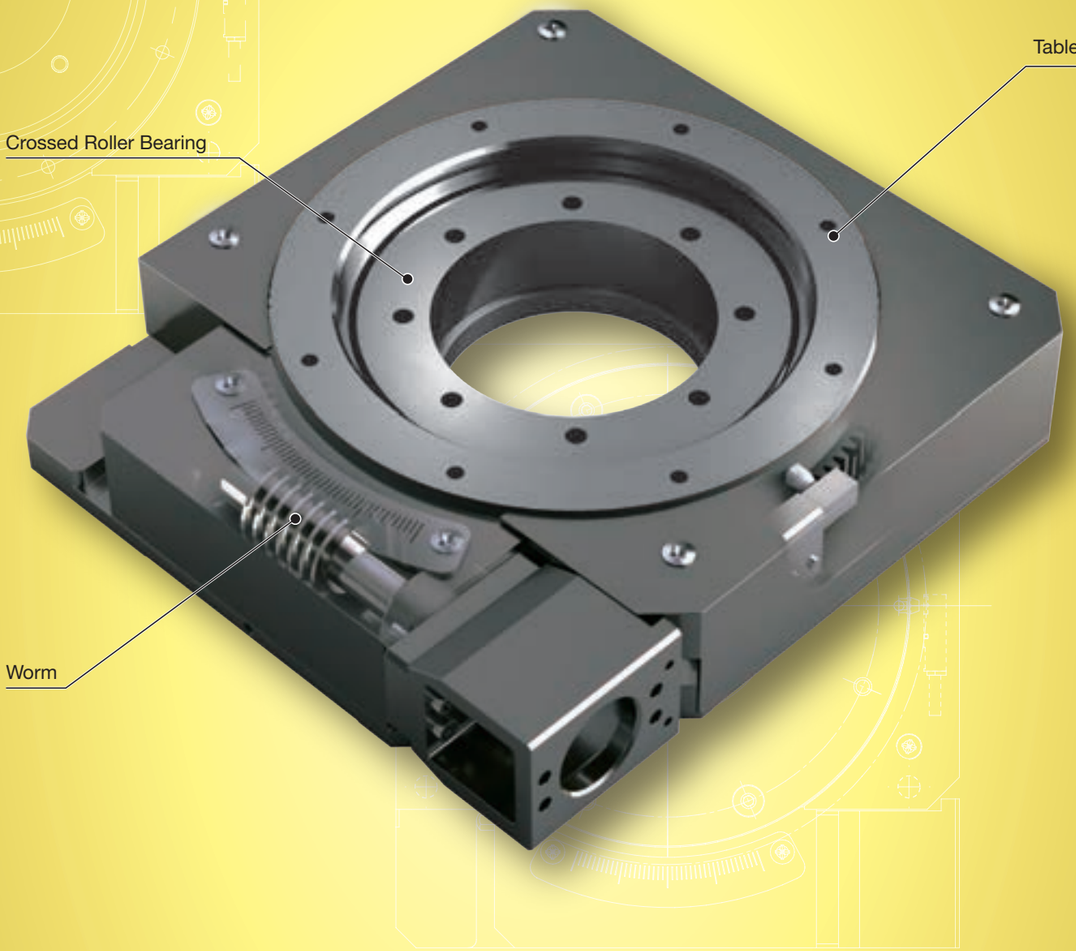

Major product specifications

Driving method	Worm gear
Bearings	Crossed Roller Bearing
Built-in lubrication part	No built-in
Material of table and bed	Table : High carbon steel Bed : Aluminum alloy
Sensor	For origin : Provided as standard Limit : Select by identification number

Accuracy

unit: sec

Positioning repeatability	±7.2
Positioning accuracy	21.6
Lost motion	32.4
Parallelism in table motion A	–
Parallelism in table motion B	–
Attitude accuracy	–
Straightness	–
Backlash	32.4

Points

● High Accuracy

1 IKO Crossed Roller Bearings are used in the rotation guiding parts and can achieve deflection on the table upper surface of 5μm or less.

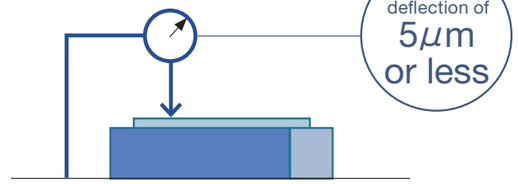

● Low profile, high rigidity

2 IKO Crossed Roller Bearings are used in the rotation guiding parts and offer high rigidity in any direction.
In addition, since Crossed Roller Bearings are used directly as the table, a low profile is achieved.

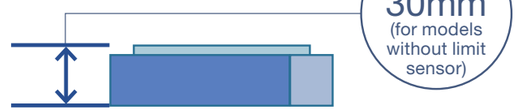

● Reduced Design Work

3 The device table or test object can be mounted directly to the table. The use of mechanical parts reduces the labor hours required to design rotating tables from scratch.

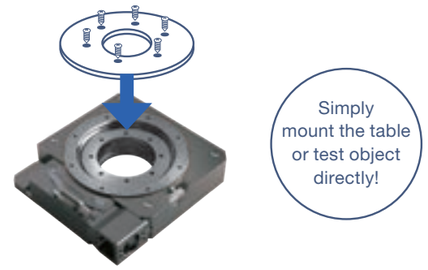

Rotation Stage SK···W drive mechanism

The SK···W is an unlimited rotation stage that employs a worm gear mechanism.
IKO Crossed Roller Bearings are used in the rotation guiding parts and utilized directly as a table to achieve high-precision rotational runout, high rigidity and a low profile.

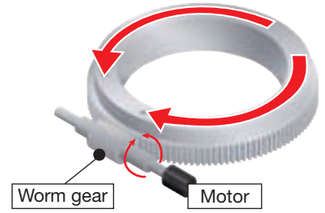

Variation

The SK···W is available with or without a limit sensor.
For models with a limit sensor, the operating range can be set to any position up to 320 degrees.

Without limit sensor

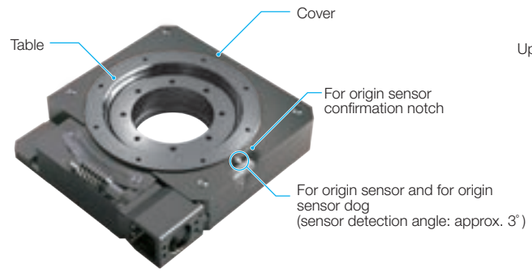

With limit sensor

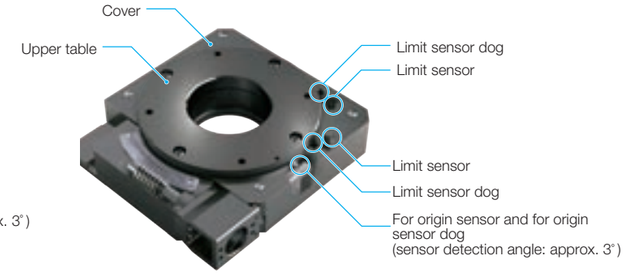

Identification Number

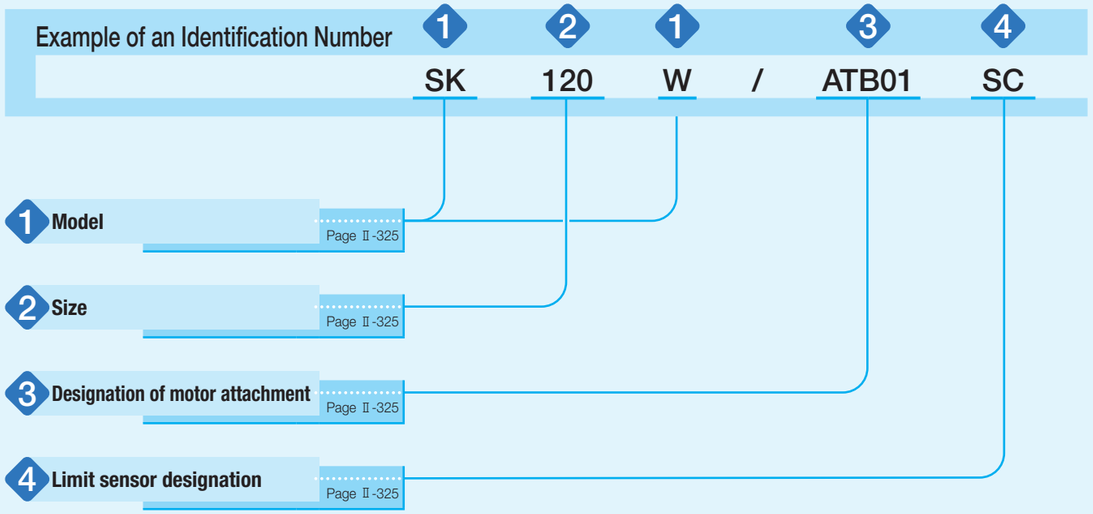

Identification Number and Specification

1 Model

SK···W: Rotation Stage SK···W

2 Size

120: Table diameter of 115mm (120mm)
Remarks: Dimensions in parentheses are for models with a limit sensor.

3 Designation of motor attachment

As for a motor attachment, select it from the list of Table 1.

- Motor should be prepared by customer.
- Please specify motor attachment applicable to motor for use.
- A coupling shown in Table 2 is temporarily fixed in the main body before shipment, final position adjustment should be performed by customer.

4 Limit sensor designation

No symbol: No limit sensor (built-in for origin sensor is included)
SC: With limit sensor (includes upper table)

Table 1 Application of motor attachment

Motor to be used					Flange size mm	Motor attachment symbol
Type	Manufacturer	Series	Model	Rated output W		
Five-phase stepper motor	ORIENTAL MOTOR Co., Ltd.	PK	PK525HPB(2)		□28	ATB01
Two-phase stepper motor (bi-polar)	MinebeaMitsumi Inc.	10PM-K	10PM-K406CNVA6098(1)(2)		□25	ATB02
AC servo motor	Mitsubishi Electric Corporation	J4	HG-AK0136	30	□25	ATB03

Note (1) Dedicated IKO model number. Available for purchase from NMB Sales Co., Ltd.
Note (2) Dual-axis model

Table 2 Coupling models

Motor attachment	Coupling models	Manufacturer	Coupling inertia J_C ×10⁻⁵kg·m²
ATB01, ATB02	MSTS-12C-5×5	Nabeya Bi-tech Kaisha	0.022
ATB03	XGS-15C-5×5	Nabeya Bi-tech Kaisha	0.020

Specifications

Table 3 Specifications

Operating angle range (1)	degree	360
Resolution (2)	sec	1.08
Maximum number of table revolutions	min⁻¹	5
Maximum number of worm axis revolutions	min⁻¹	600
Moment rigidity	s/N·cm	0.04
Allowable load (3)	N	50

Note (1) Values shown are for models without a limit sensor. When models with a limit sensor are used, adjustments can be performed to any angle within a range of up to 320 degrees.
(2) The resolution indicates a value when fraction sizes of the motor are 10,000 pulses/rev.
(3) Allowable load refers to the maximum load that can be applied without affecting functions or performance.

Table 4 Accuracy

Positioning accuracy	sec	21.6
Positioning repeatability	sec	±7.2
Lost motion	sec	32.4
Backlash	sec	32.4
Parallelism of table to mounting surface	μm	20 (40)
Radial runout of table diameter	μm	5 (15)
Deflection on table upper surface	μm	5 (25)

Remark: Values in parentheses are for models with a limit sensor.

Mounting

For the processing accuracy of the Precision Positioning Table mounting surface and the tightening torque of the fixing screws, see page Ⅲ-29.

Sensor Specification

The SK···W is fitted with a for origin sensor (E2S-W13B 1M produced by OMRON Corporation) as standard.
There is no precision regulation of the relative positions of the for origin sensor and the table mounting hole, precise adjustment of the return to origin position should be performed by performing offset adjustment through a higher-level controller. For models with a limit sensor, a limit sensor (E2S-W14 1M produced by OMRON Corporation) and an upper table are added. The position of the limit sensor dog can be adjusted. The operating range can be set to any position up to 320 degrees.

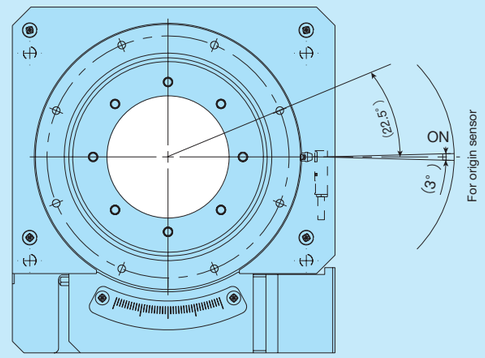

Fig.1 For origin sensor timing chart

* For models without a limit sensor, the for origin sensor dog position can be checked from the cover notch.
* For models with a limit sensor, check the position of the for origin sensor dog with the cover removed.
* The cover cannot be removed after limit sensor dog adjustment. Perform limit sensor dog adjustment after fixing the base of the product to the mounting surface and mounting the cover.

Dimensions of Motor Attachment

ATB01

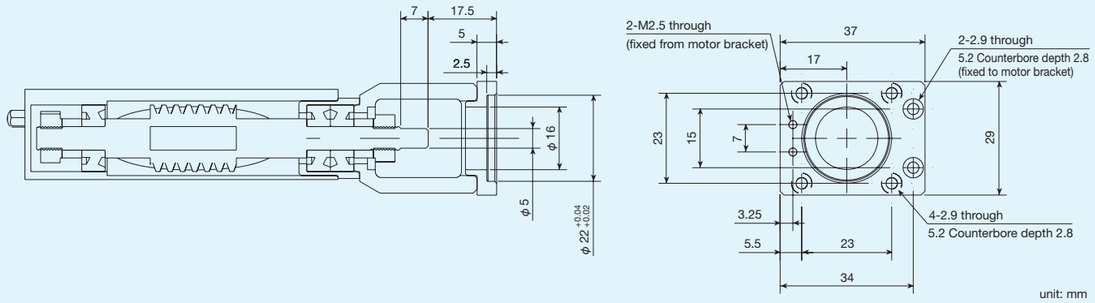

unit: mm

ATB02

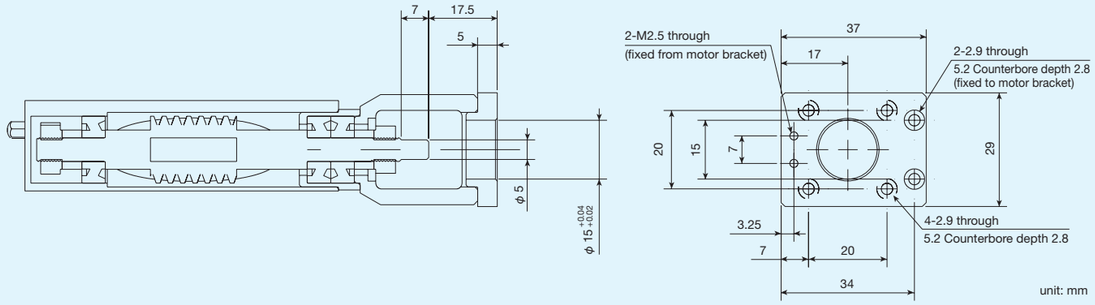

unit: mm

ATB03

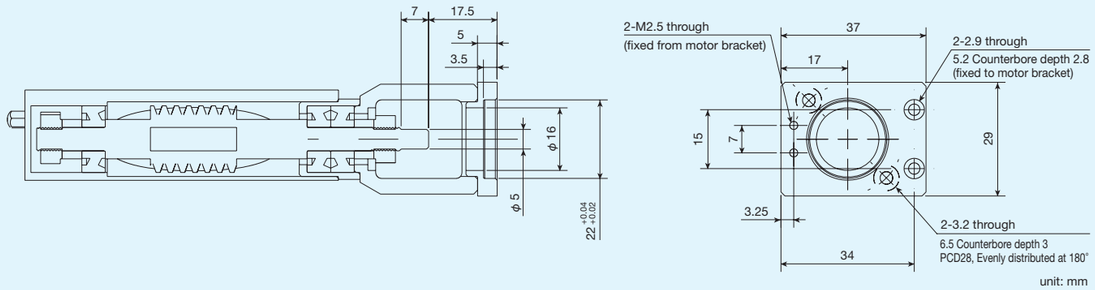

unit: mm

IKO Rotation Stage SK···W

SK120W Without limit sensor

Mass: 2.0kg

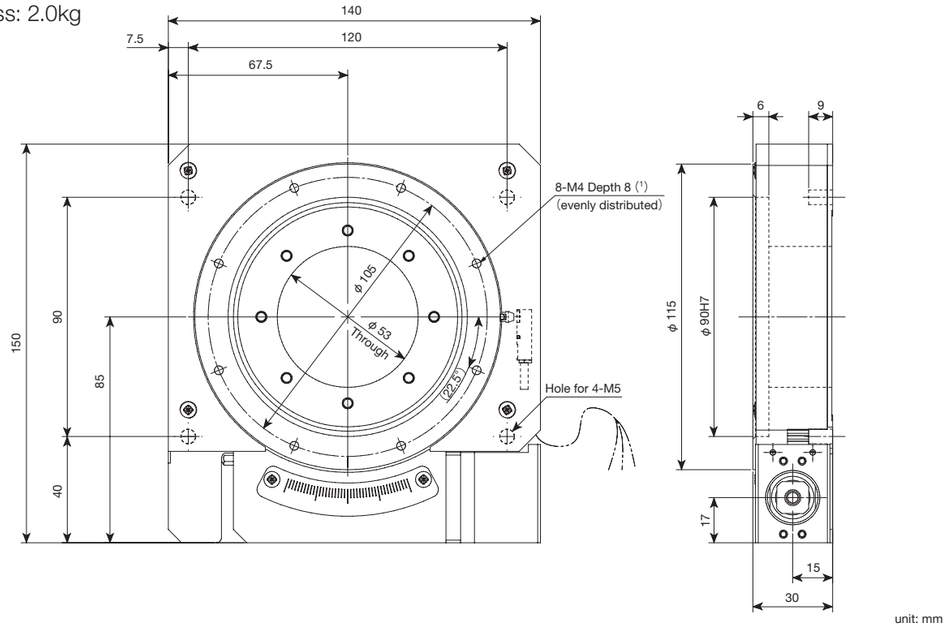

unit: mm

Notes (1) Too deep insertion depth of the mounting bolt may affect the rotation performance of the table, so never insert a bolt longer than the depth of the through hole.

SK120W With limit sensor/with upper table

Mass: 2.4kg

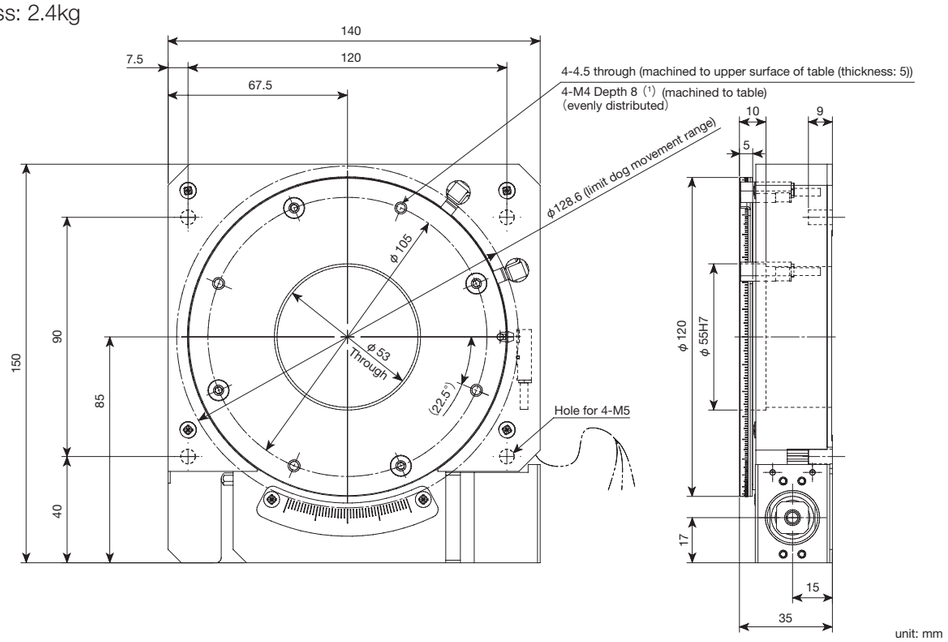

unit: mm

Notes (1) Too deep insertion depth of the mounting bolt may affect the rotation performance of the table, so never insert a bolt longer than the depth of the through hole.

AM

AM

Ball screw

Linear / Rotation

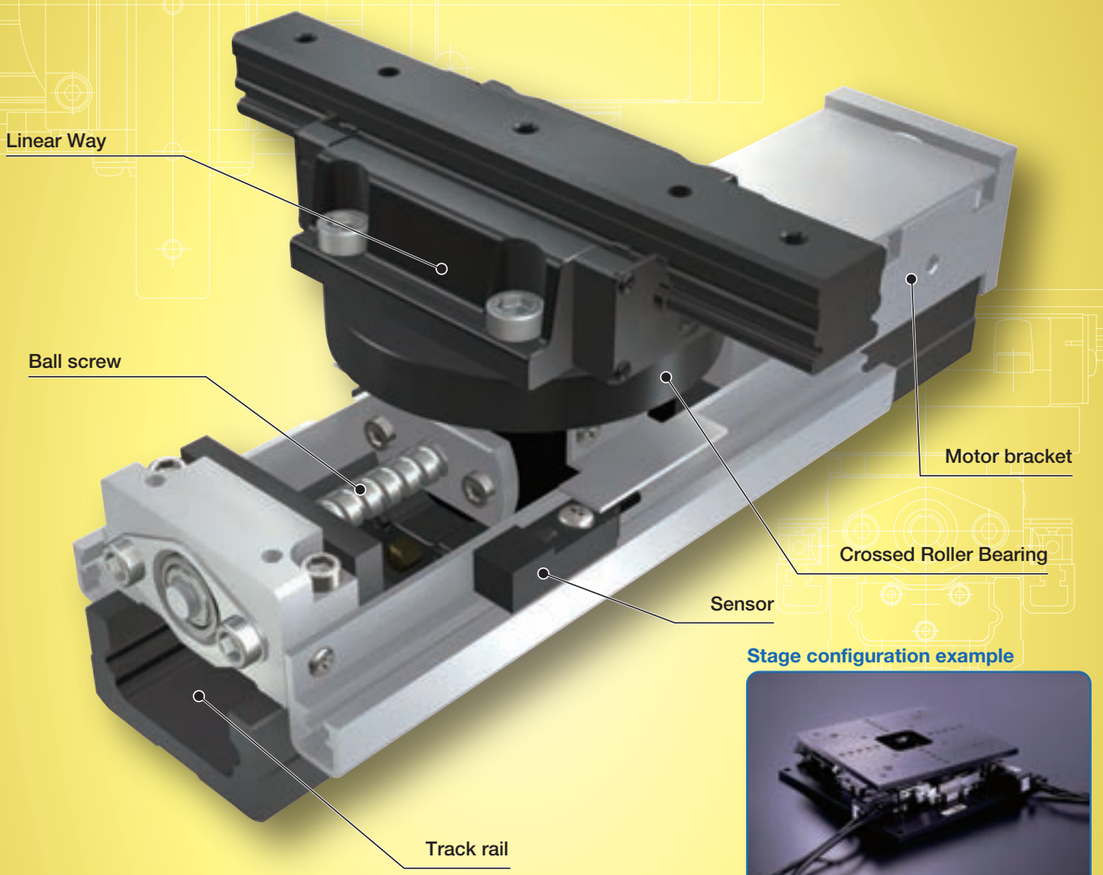

Stage configuration example

Major product specifications

Driving method	Precision ball screw
Linear motion rolling guide and bearing	Linear Way (ball type) Crossed Roller Bearing
Built-in lubrication part	No built-in
Material of table and bed	High carbon steel
Sensor	Provided as standard

Accuracy

unit: mm

Positioning repeatability	±0.002
Positioning accuracy	0.020
Lost motion	–
Parallelism in table motion A	–
Parallelism in table motion B	0.008
Attitude accuracy	–
Straightness	–
Backlash	0.003

Points

● Positioning module enabling various motions

1 This is a positioning module developed for alignment stage by combining the high rigidity Crossed Roller Bearing and Linear Way based on the Precision Positioning Table TU.

● Height adjustment is not required.

2 Tolerance of height dimension is managed at high precision of ±10μm. Alignment stage can be configured without adjusting the heights of respective Alignment Module AM.

● Flexibility of freely designing the stage according to the usage

3 This unit helps you freely design the alignment stage according to the usage by combining various stages and bases into the Alignment Module AM.

● Large stage of □2,000 class is also supported!

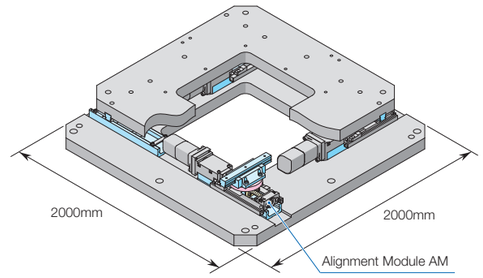

Configuration example and operating principle of alignment stage

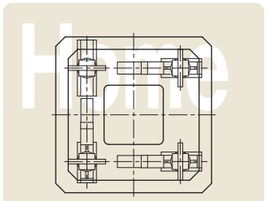
Reference position

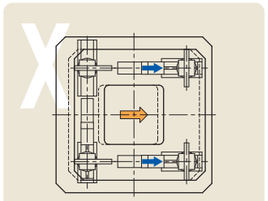
X motion

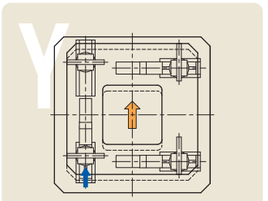
Y motion

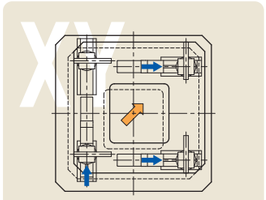
XY motion

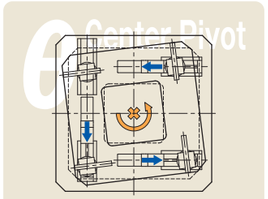
Center reference angle compensation

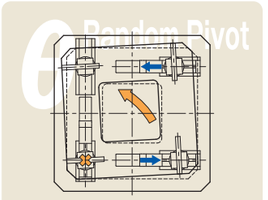
Arbitrary position reference angle compensation

Variation

Shape	Model and size	Size W×L×H (mm)	Stroke length (mm)
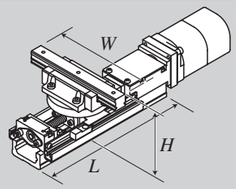	AM25	86×130× 47	30
	AM40	120×180× 78	30
	AM60	220×290×110	90
	AM86	350×390×148	120

1N=0.102kgf=0.2248lbs.
1mm=0.03937inch

Identification Number

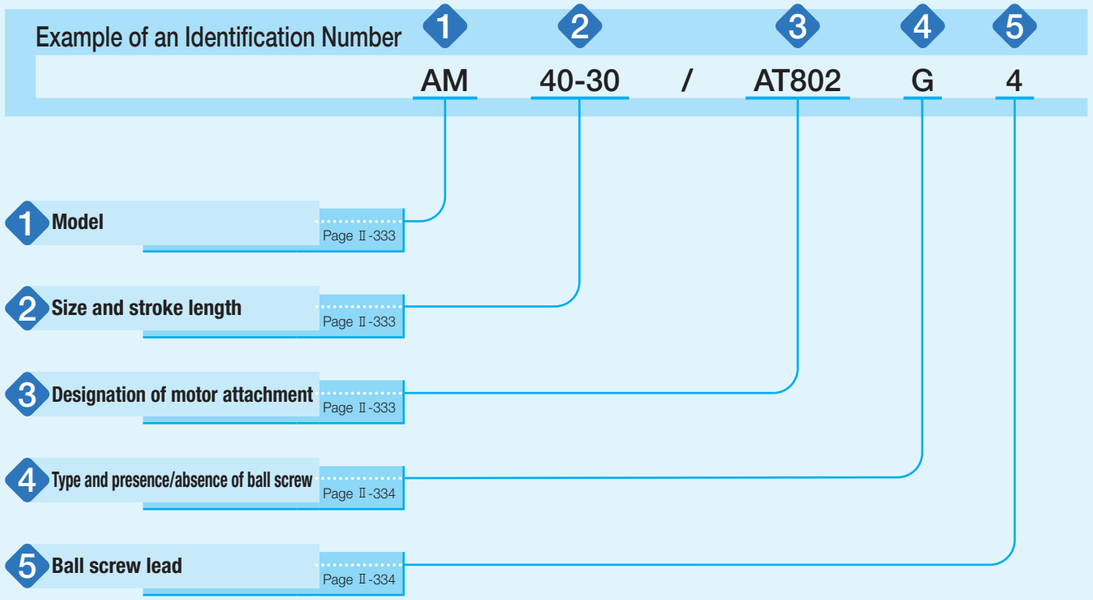

Identification Number and Specification

1 Model

AM: Alignment Module AM

2 Size and stroke length

25- 30: Width 25mm, stroke length 30mm, height 47mm
40- 30: Width 40mm, stroke length 30mm, height 78mm
60- 90: Width 60mm, stroke length 90mm, height 110mm
86-120: Width 86mm, stroke length 120mm, height 148mm

3 Designation of motor attachment

AT800: Without motor attachment
To specify the motor attachment, select it from the list of Table 1.

- Motor should be prepared by customer.
- Please specify motor attachment applicable to motor for use.
- If motor attachment is specified, a coupling shown in Table 2 is mounted on the main body before shipment. However, the final position adjustment should be made by customer since it is only temporarily fixed.
- For a product without motor attachment (AT800), no coupling is attached.

Table 1 Application of motor attachment

Motor to be used					Flange size mm	Motor attachment			
Type	Manufacturer	Series	Model	Rated output W		AM25	AM40	AM60	AM86
AC servo motor	YASKAWA ELECTRIC CORPORATION	Σ-V	SGMMV-A2A	20	□25	AT801	–	–	–
			SGMMV-A3A	30		AT801	–	–	–
			SGMJV-A5A	50	□40	–	AT802	–	–
			SGMAV-A5A			–	AT802	–	–
			SGMJV-01A	100		–	AT802	AT803	–
			SGMAV-01A			–	AT802	AT803	–
			SGMAV-C2A	150		–	–	AT803	–
			SGMJV-02A	200	□60	–	–	–	AT804
			SGMAV-02A			–	–	–	AT804
			SGMJV-04A	400		–	–	–	AT805
			SGMAV-04A			–	–	–	AT805
	Mitsubishi Electric Corporation	J4	HG-AK0236	20	□25	AT801	–	–	–
			HG-AK0336	30		AT801	–	–	–
			HG-MR053	50	□40	–	AT802	–	–
			HG-KR053			–	AT802	–	–
			HG-MR13	100		–	AT802	AT803	–
			HG-KR13			–	AT802	AT803	–
			HG-MR23	200	□60	–	–	–	AT804
			HG-KR23			–	–	–	AT804
			HG-MR43	400		–	–	–	AT805
			HG-KR43			–	–	–	AT805
	Panasonic Corporation	MINAS A5	MSMD5A	50	□38	–	AT807	–	–
			MSME5A			–	AT807	–	–
			MSMD01	100		–	AT807	AT808	–
			MSME01			–	AT807	AT808	–
			MSMD02	200	□60	–	–	–	AT809
			MSME02			–	–	–	AT809
			MSMD04	400		–	–	–	AT810
			MSME04			–	–	–	AT810
	Hitachi Industrial Equipment Systems Co., Ltd	AD	ADMA-R5L	50	□40	–	AT802	–	–
			ADMA-01L	100		–	AT802	AT803	–
			ADMA-02L	200	□60	–	–	–	AT804
			ADMA-04L	400		–	–	–	AT805

Remark: For detailed motor specifications, please see respective motor manufacturer's catalog.

Table 2 Coupling models

Motor attachment	Coupling models	Manufacturer	Coupling inertia J_C $\times 10^{-5}$kg・m^2
AT801	UA-15C- 5× 5	Sakai Manufacturing Co., Ltd	0.024
AT802	UA-20C- 5× 8	Sakai Manufacturing Co., Ltd	0.086
AT803	UA-25C- 8× 8	Sakai Manufacturing Co., Ltd	0.290
AT804	UA-30C-10×14	Sakai Manufacturing Co., Ltd	0.603
AT805	UA-35C-10×14	Sakai Manufacturing Co., Ltd	1.34
AT807	UA-20C- 5× 8	Sakai Manufacturing Co., Ltd	0.086
AT808	UA-25C- 8× 8	Sakai Manufacturing Co., Ltd	0.290
AT809	UA-30C-10×11	Sakai Manufacturing Co., Ltd	0.603
AT810	UA-35C-10×14	Sakai Manufacturing Co., Ltd	1.34

Remark: For detailed coupling specification, please see the manufacturer's catalog.

4 Type and presence/absence of ball screw

G: Ground ball screw
N: Without ball screw

When selecting N, specify AT800 for ❸ and set "No symbol" for ❺.

5 Ball screw lead

4: Lead 4mm (applicable to AM25 and AM40)
5: Lead 5mm (applicable to AM60 and AM86)

1N=0.102kgf=0.2248lbs.
1mm=0.03937inch

Specifications

Table 3 Accuracy unit: mm

Model and size	Stroke length(1)	Length of track rail	Positioning repeatability(1)	Positioning accuracy (1)	Parallelism in motion B	Backlash (1)
AM25	30	130	±0.002	0.020	0.008	0.003
AM40	30	180				
AM60	90	290				
AM86	120	390				

Note (1) Not applicable to "Without ball screw" specification.

Table 4 Height unit: mm

Model and size	Module height	Tolerance of height
AM25	47	±0.010
AM40	78	
AM60	110	
AM86	148	

Remark: These are values of distance between mounting surface and the center of module upper surface under the condition where upper and lower axis intersect orthogonally and the linear motion rolling guide of each axis stays at the center of the stroke.

Table 5 Maximum speed

Model and size	Ball screw lead mm	Maximum speed mm/s
AM25	4	200
AM40		
AM60	5	250
AM86		

Remark: To measure the practical maximum speed, it is required to consider operation patterns based on the motor to be used and load conditions.

Table 6 Specifications of ball screw unit: mm

Model and size	Shaft dia.	Overall length
AM25- 30	6	146
AM40- 30	8	158
AM60- 90	12	263
AM86-120	20	359

Table 7 Maximum carrying mass unit: kg

Model and size	Maximum carrying mass	
	Horizontal	Vertical
AM25	11	4.6
AM40	39	10
AM60	88	13
AM86	210	23

Table 8 Table inertia and starting torque

Model and size	Table inertia J_T $\times 10^{-5}$kg·m^2	Starting torque T_S N·m
AM25	0.028	0.02
AM40	0.08	0.04
AM60	0.59	0.09
AM86	4.97	0.13

Mounting

For the processing accuracy of the Precision Positioning Table mounting surface and the tightening torque of the fixing screws, see page Ⅲ-29.

Sensor Specification

Table 9 Sensor timing chart

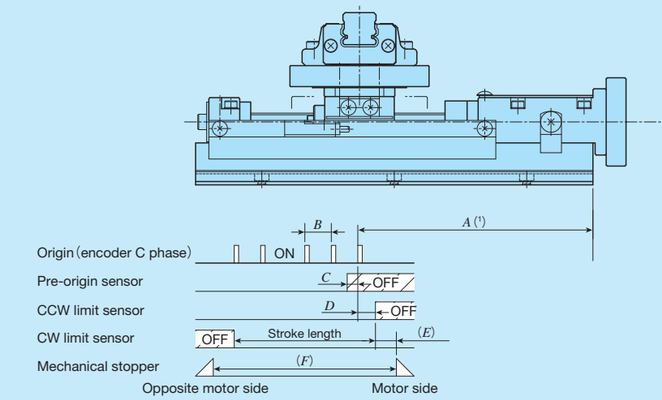

unit: mm

Model and size	A	B	C	D	E	F
AM25	90	4	2	15	8	46.4
AM40	90	4	2	15	8	48.5
AM60	133	5	3	45	16	117.6
AM86	155	5	3	60	8	135

Note (1) The origin is the center of stroke.

Example of Motion Specification

Combining the AM enables the following table configurations.
And, as it is possible to attach this unit to the device to be delivered, if you are interested, please contact IKO.

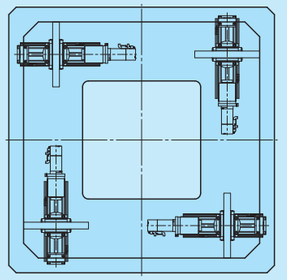
Reference position

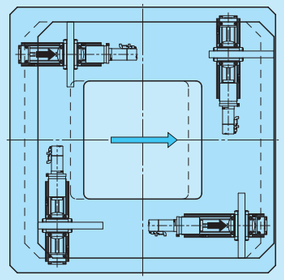
X motion

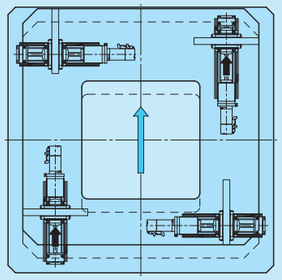
Y motion

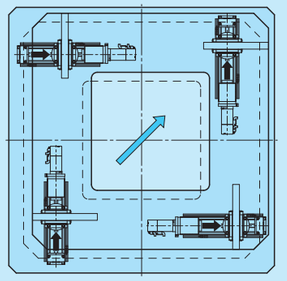
XY motion

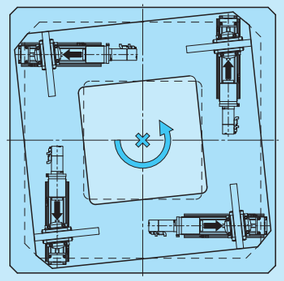
Center reference angle compensation

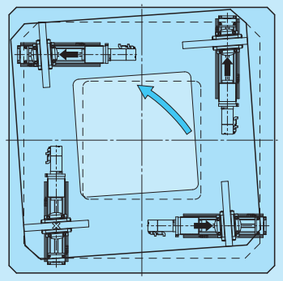
Arbitrary position reference angle compensation

1N=0.102kgf=0.2248lbs.
1mm=0.03937inch

Dimensions of Motor Attachment

AM25

AT800 (without attachment)

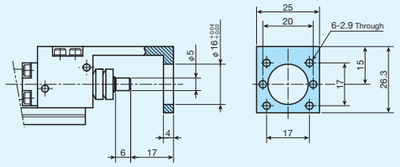

AT801

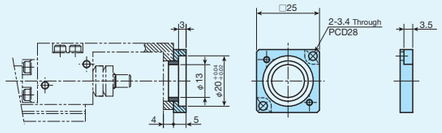

AM40

AT800 (without attachment)

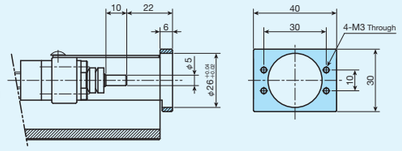

AT802

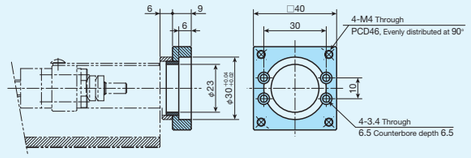

AT807

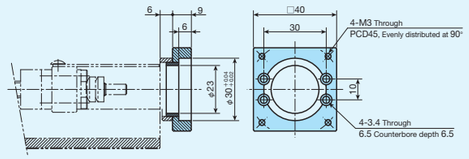

AM60

AT800 (without attachment)

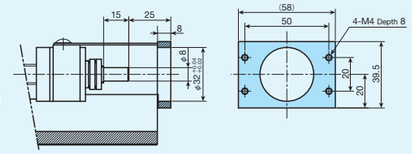

AT803

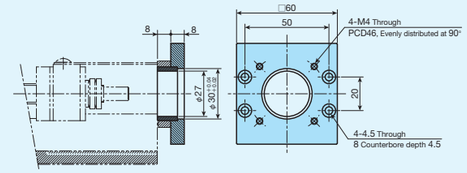

AT808

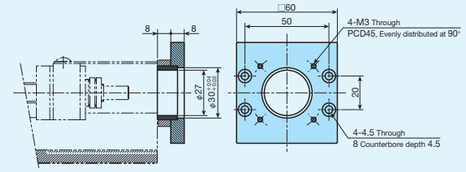

AM86

AT800 (without attachment)

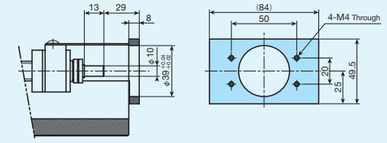

AT804

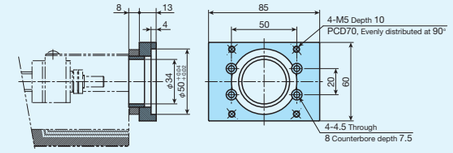

AT805

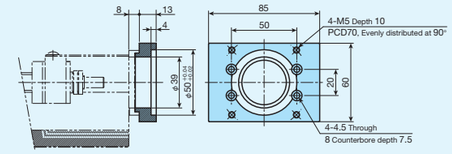

AT809

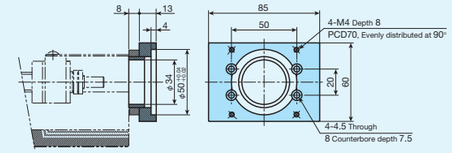

AT810

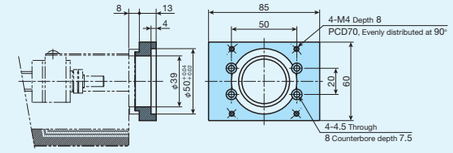

AM

1N=0.102kgf=0.2248lbs.
1mm=0.03937inch

AM25 Without motor attachment and with ball screw

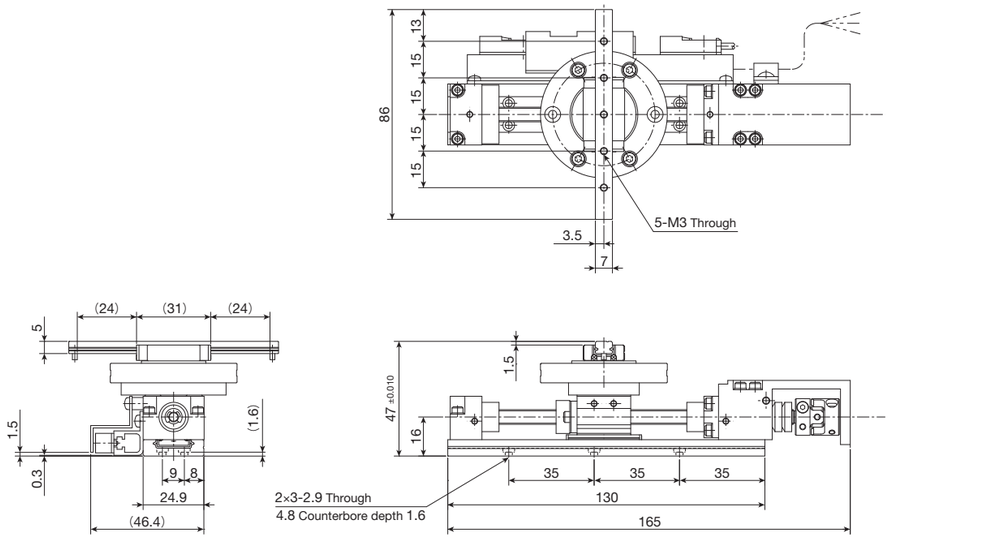

mass: 0.6kg

AM25 Without ball screw

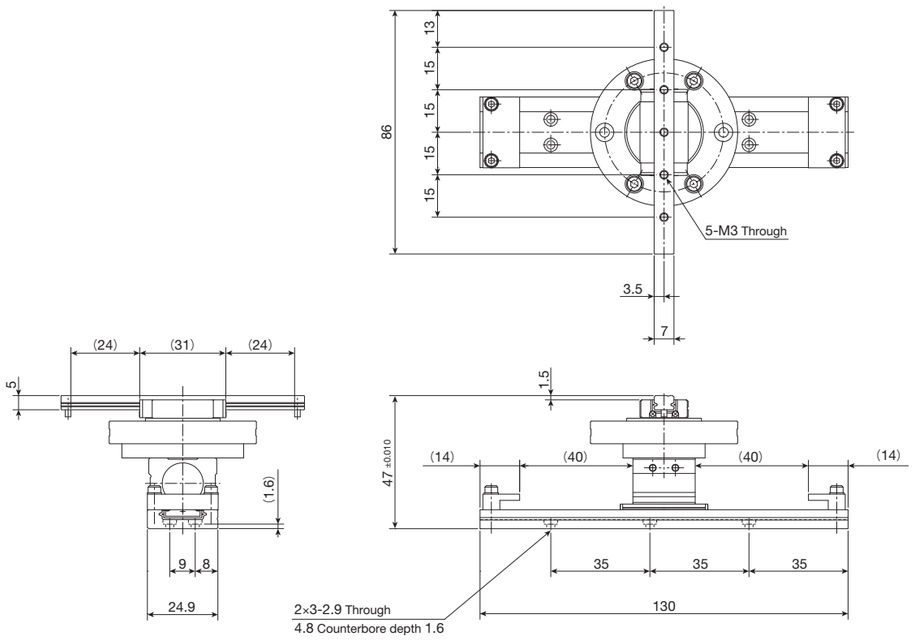

mass: 0.4kg

AM40 Without motor attachment and with ball screw

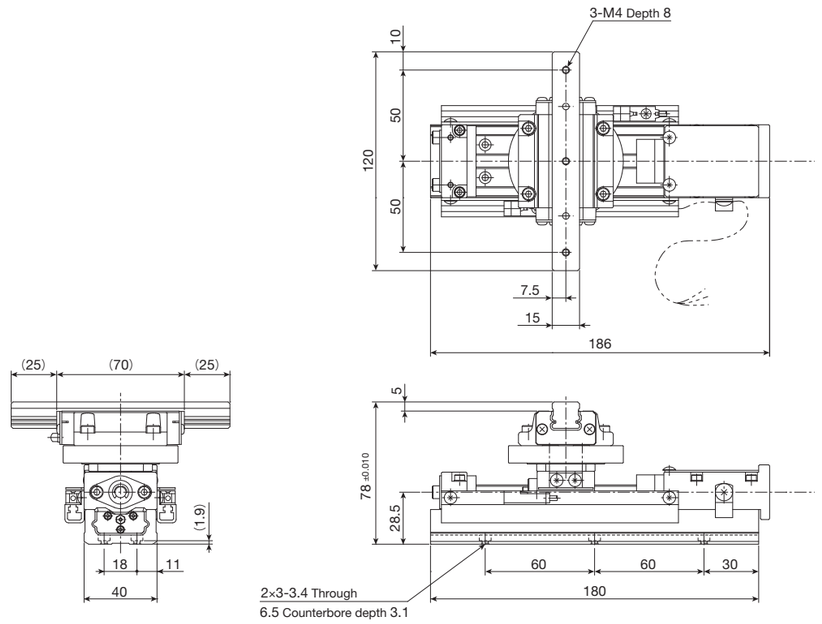

mass: 2.0kg

AM40 Without ball screw

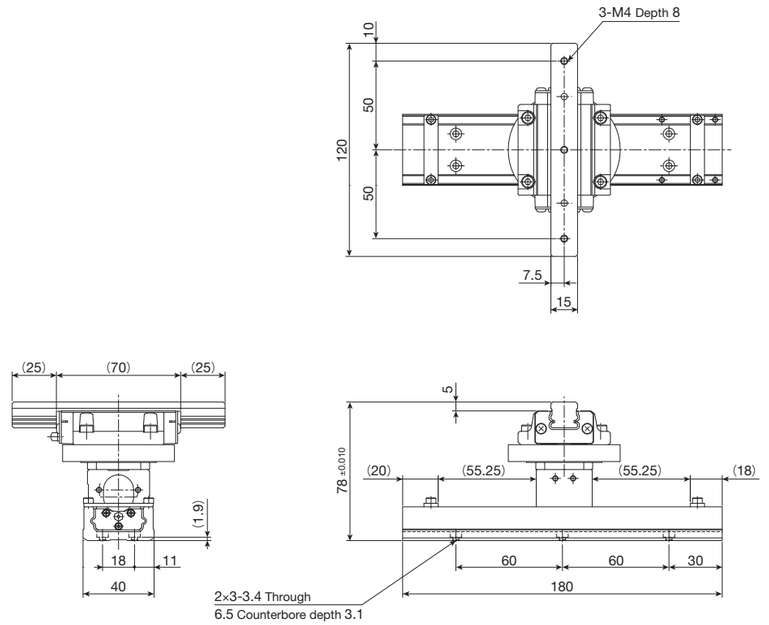

mass: 1.5kg

1N=0.102kgf=0.2248lbs.
1mm=0.03937inch

AM60 Without motor attachment and with ball screw

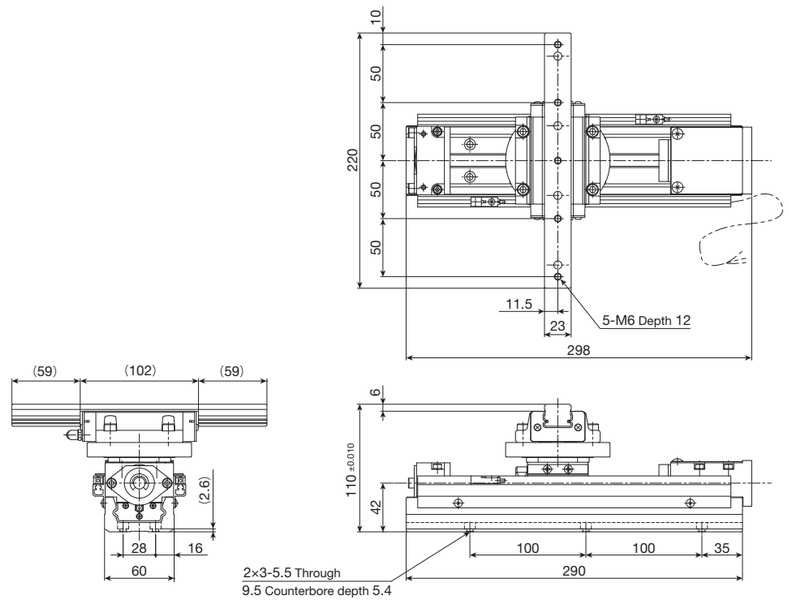

mass: 6kg

AM60 Without ball screw

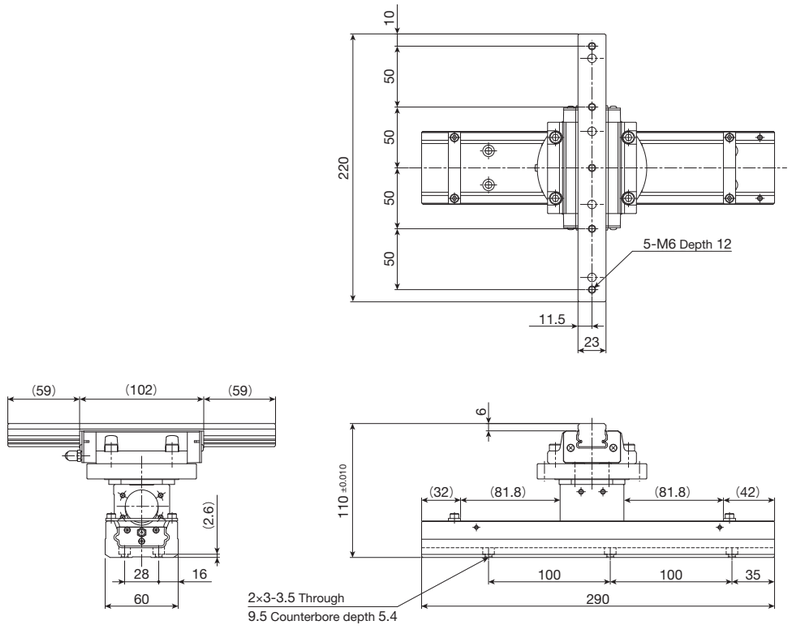

mass: 5kg

AM86 Without motor attachment and with ball screw

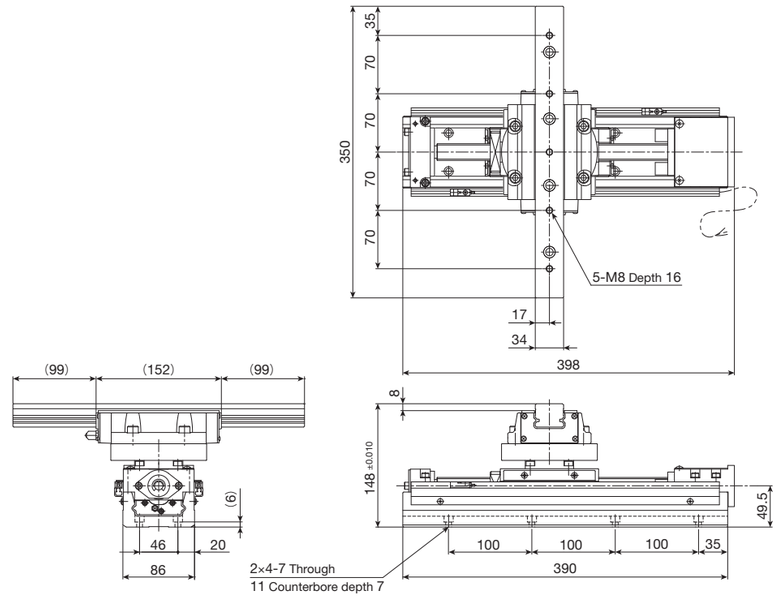

mass: 17kg

AM86 Without ball screw

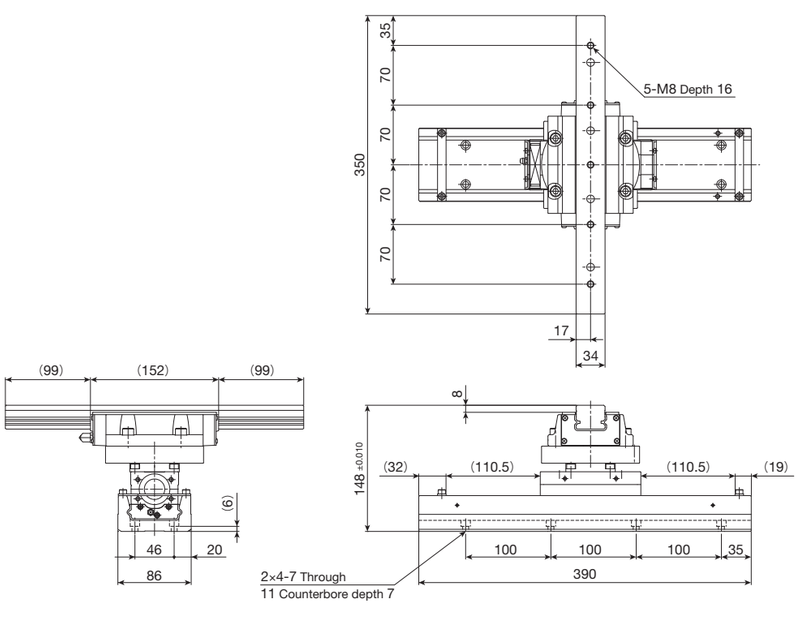

mass: 15kg

1N=0.102kgf=0.2248lbs.
1mm=0.03937inch

TZ

TZ

Ball screw

Linear

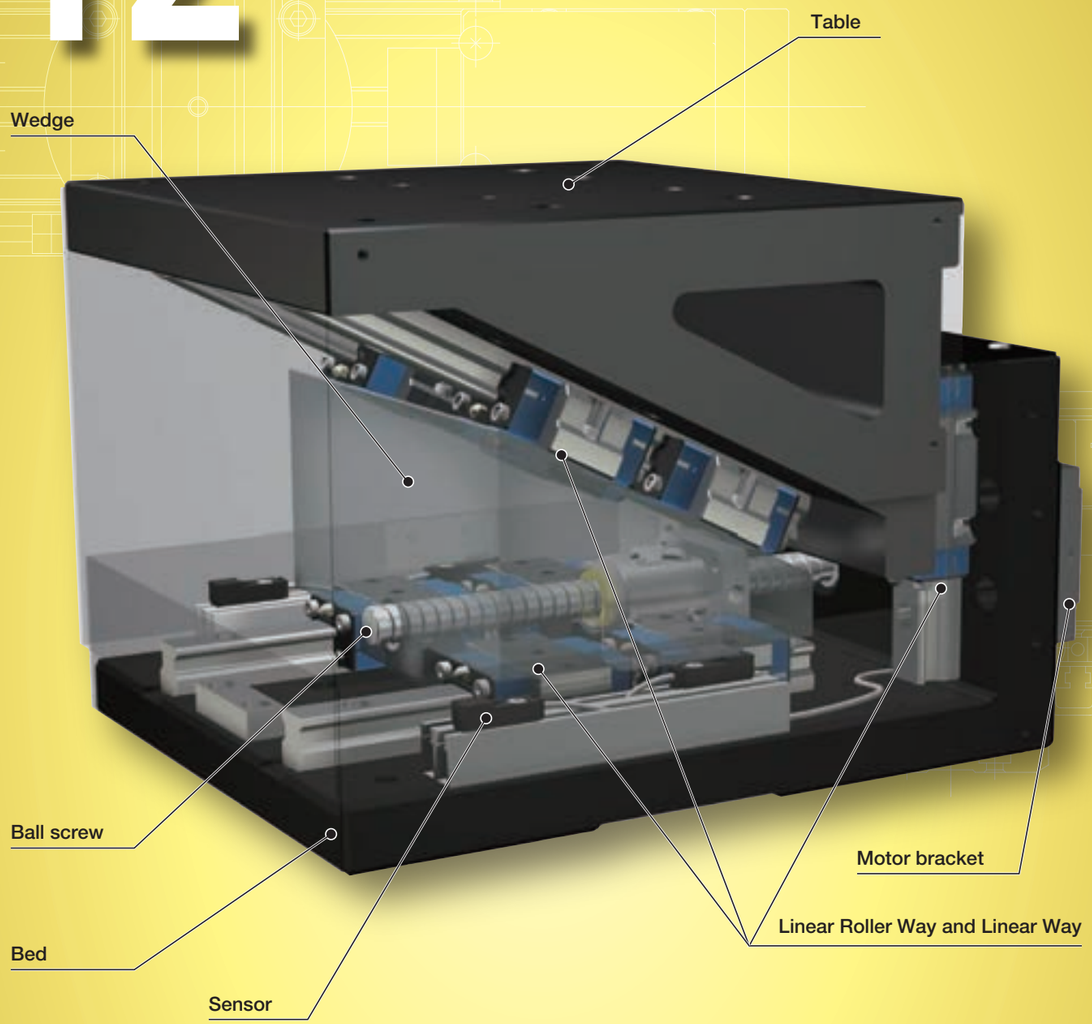

Major product specifications

Driving method	Precision ball screw
Linear motion rolling guide	Linear Roller Way（roller type） Linear Way（ball type）
Built-in lubrication part	Lubrication part "C-Lube" is built-in
Material of table and bed	Aluminum extruded material (Alumite)
Sensor	Provided as standard

Accuracy

unit: mm

Positioning repeatability	±0.001
Positioning accuracy	0.005
Lost motion	0.001
Parallelism in table motion A	–
Parallelism in table motion B	–
Attitude accuracy	–
Straightness	–
Backlash	–

Points

● Compact precision elevating table

1 This is an elevating table for performing compact yet high precision vertical positioning with unique wedge mechanism adopted.

● Two types and two sizes selectable depending on the usage

2 Table dimensions of □120 mm and □200 mm have been added to our lineup, including the high accuracy/high rigidity type with roller-type linear motion rolling guide incorporated and the standard type with superior cost performance. Two kinds of wedge reduction ratio are prepared, thus enabling vertical positioning of up to 24mm in stroke.

● Installation of linear encoder enables the positioning of a rank higher level.

3 Specifying an optional linear encoder attached unit and performing the fully-closed loop control enables the positioning of even higher precision.

● Sensor provided as standard

4 Limit sensor and origin / pre-origin sensors are provided as standard. The sensor is compactly built in the main unit, thus facilitating the incorporation into a machine or device.

● Available as multi-axis configured Z-axis

5 Placing the unit on a slide table of precision positioning table makes the unit available as Z-axis positioning mechanism of the multi-axis table.

Example of combination with XYZ positioning table using the Precision Elevating Table TZ

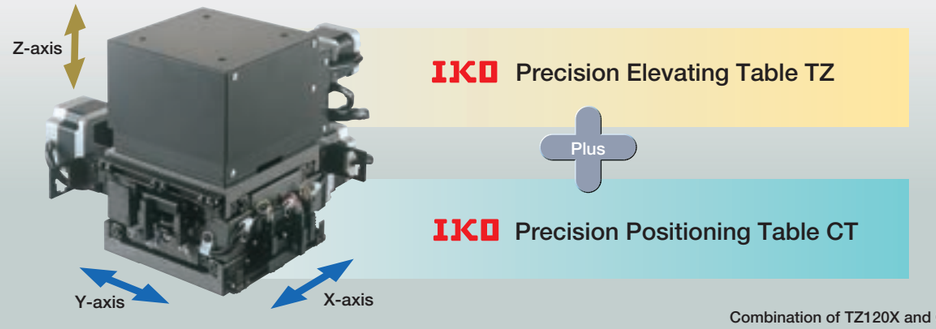

Combination of TZ120X and CT125 / 125

Variation

Shape	Model and size	Table width (mm)	Linear motion rolling guide type	Wedge reduction ratio
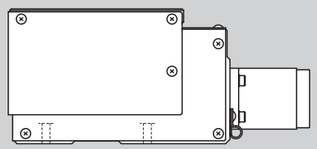	TZ120X-2	□120	Roller Type	1 : 2
	TZ120X-4			1 : 4
	TZ200H-2	□200	Ball type	1 : 2
	TZ200H-4			1 : 4
	TZ200X-2		Roller Type	1 : 2
	TZ200X-4			1 : 4

1N=0.102kgf=0.2248lbs.
1mm=0.03937inch

Identification Number

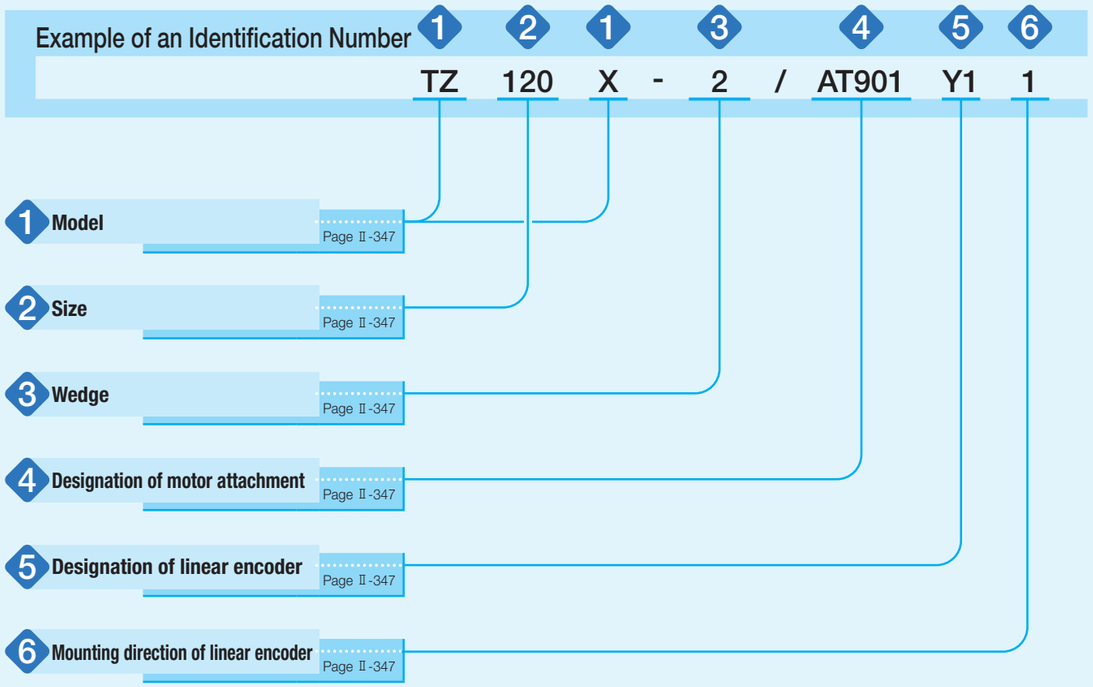

Identification Number and Specification

1 Model

TZ···H: Precision Elevating Table（applicable to size 200）
TZ···X: Precision Elevating Table, high precision and high rigidity type（applicable to size 120, 200）

2 Size

120: Table size □120mm
200: Table size □200mm

3 Wedge

2: Wedge reduction ratio 1 : 2
4: Wedge reduction ratio 1 : 4

This ratio indicates the reduction ratio of vertical travel distance to the ball screw feed rate.

4 Designation of motor attachment

As for a motor attachment, select it from the list of Table 1.

- Motor should be prepared by customer.
- Please specify motor attachment applicable to motor for use.
- A coupling shown in Table 2 is mounted on the main body before shipment. However, the final position adjustment should be made by customer since it is only temporarily fixed.
- When specifying an AC servomotor attachment, an origin sensor is not provided.

5 Designation of linear encoder

No symbol: Without linear encoder
When specifying the linear encoder, see Table 3.

- "With linear encoder" is only applicable to AC Servomotor specification. For applicable models and motor attachments, see Table 1.

6 Mounting direction of linear encoder

No symbol: On the right as viewed from the side opposite the motor
1 : On the left as viewed from the side opposite the motor

- The mounting direction of the linear encoder and pull-out direction of the sensor cord are the same.

Table 1 Application of motor attachment

Motor model					Flange size mm	Motor attachment	
Type	Manufacturer	Series	Model	Rated output W		TZ120X	TZ200H TZ200X
AC servo motor	YASKAWA ELECTRIC CORPORATION	Σ-V	SGMJV-A5A	50	□40	AT901	–
			SGMAV-A5A			AT901	–
			SGMJV-01A	100		AT901	AT902
			SGMAV-01A			AT901	AT902
			SGMAV-C2A	150		–	AT902
	Mitsubishi Electric Corporation	J4	HG-MR053	50	□40	AT901	–
			HG-KR053			AT901	–
			HG-MR13	100		AT901	AT902
			HG-KR13			AT901	AT902
	Panasonic Corporation	MINAS A5	MSMD5A	50	□38	AT903	–
			MSME5A			AT903	–
			MSMD01	100		AT903	AT904
			MSME01			AT903	AT904
Stepper motor	ORIENTAL MOTOR Co., Ltd.	α step	ARM46		□42	AT905	–
			ARM66		□60	–	AT906
			ARM69		□60	–	AT906
		CRK	CRK54		□42	AT907	–
			CRK56 (1)		□60	–	AT908

Note (1) Applicable to the outer diameter ϕ8 of motor output shaft.
Remark: For detailed motor specifications, please see respective motor manufacturer's catalog.

Table 2 Coupling models

Motor attachment	Coupling models	Manufacturer	Coupling inertia J_c $\times 10^{-5}$kg · m²
AT901	UA-20C-5× 8	Sakai Manufacturing Co., Ltd	0.086
AT902	UA-25C-8× 8	Sakai Manufacturing Co., Ltd	0.29
AT903	UA-20C-5× 8	Sakai Manufacturing Co., Ltd	0.086
AT904	UA-25C-8× 8	Sakai Manufacturing Co., Ltd	0.29
AT905	UA-20C-5× 6	Sakai Manufacturing Co., Ltd	0.086
AT906	UA-25C-8×10	Sakai Manufacturing Co., Ltd	0.29
AT907	UA-20C-5× 5	Sakai Manufacturing Co., Ltd	0.086
AT908	UA-25C-8× 8	Sakai Manufacturing Co., Ltd	0.29

Remark: For detailed coupling specifications, please see respective manufacturer's catalog.

Table 3 Linear encoder models

Item \ Target models	TZ120X			TZ200H、TZ200X		
Designation code of linear encoder	Y1	J1	P1	Y2	J2	P2
Manufacturers of compatible drivers	YASKAWA ELECTRIC CORPORATION	Mitsubishi Electric Corporation	Panasonic Corporation	YASKAWA ELECTRIC CORPORATION	Mitsubishi Electric Corporation	Panasonic Corporation
Manufacturer	Renishaw plc			Renishaw plc		
Linear encoder head	T1031-30A			RGH20B30L00A	RGH20Y30D33A	
Linear encoder	A-9705-0004			A-9660-0080		
Interface	Ti0000A00V	Ti0200A04A		–		
Reference mark	–			A-9561-0065		

TZ

1N=0.102kgf=0.2248lbs.
1mm=0.03937inch

Specifications

Table 4 Specifications

Model and size	Wedge reduction ratio	Ball screw lead mm	Resolution (1) μm/pulse	Stroke length mm
TZ120X-2	1 : 2	4	2.0 (0.1)	10
TZ120X-4	1 : 4		1.0 (0.1)	5
TZ200H-2	1 : 2	5	2.5 (0.1)	24
TZ200H-4	1 : 4		1.25 (0.1)	12
TZ200X-2	1 : 2		2.5 (0.1)	24
TZ200X-4	1 : 4		1.25 (0.1)	12

Note (1) The resolution indicates a value when fraction sizes of the motor are 1,000 pulses/rev.
Remark: The values in ( ) indicate values with linear encoder and Panasonic Corporation MINAS A5 system selected. If the ΣV system of YASKAWA ELECTRIC CORPORATION is selected, it should be 0.078125 μm/pulse.

Table 5 Accuracy unit: mm

Model and size	Wedge reduction ratio	Positioning repeatability	Positioning accuracy	Lost motion	Parallelism in table elevating	Squareness in table elevating
TZ120X-2	1 : 2	±0.001	– (0.005)	0.001	0.010	0.010
TZ120X-4	1 : 4					
TZ200H-2	1 : 2	±0.001	– (0.005)	–	–	–
TZ200H-4	1 : 4					
TZ200X-2	1 : 2	±0.001	– (0.005)	0.001	0.010	0.010
TZ200X-4	1 : 4					

Remark: The values in ( ) indicate values with a linear encoder.

Table 6 Maximum speed

Model and size	Wedge reduction ratio	Ball screw lead mm	Maximum speed mm/s	
			AC servomotor	Stepper motor
TZ120X-2	1 : 2	4	100	60
TZ120X-4	1 : 4		50	30
TZ200H-2	1 : 2	5	125	75
TZ200H-4	1 : 4		62.5	37.5
TZ200X-2	1 : 2		125	75
TZ200X-4	1 : 4		62.5	37.5

Remark: To measure the practical maximum speed, it is required to consider operation patterns based on the motor to be used and load conditions.

Table 7 Maximum carrying mass unit: kg

Model and size	Wedge reduction ratio	Maximum carrying mass	
		Horizontal	Vertical
TZ120X	1 : 2	82	10
	1 : 4	146	10
TZ200H	1 : 2	109	9
	1 : 4	109	10
TZ200X	1 : 2	125	9
	1 : 4	160	10

Table 8 Specifications of ball screw unit: mm

Model and size	Shaft dia.	Overall length
TZ120X	8	168
TZ200H	12	215
TZ200X	12	215

Table 9 Table inertia and starting torque

Model and size	Wedge reduction ratio	Table inertia J_T $\times 10^{-5}$kg·m²	Starting torque T_S N·m
TZ120 -2	1 : 2	0.076	0.03
TZ120 -4	1 : 4	0.061	0.02
TZ120X-2	1 : 2	0.076	0.03
TZ120X-4	1 : 4	0.064	0.02
TZ200H-2	1 : 2	0.581	0.07
TZ200H-4	1 : 4	0.473	0.06
TZ200X-2	1 : 2	0.581	0.07
TZ200X-4	1 : 4	0.473	0.06

Mounting

For the fixing screw tightening torque of the Precision Positioning Table, see page Ⅲ-29.

Sensor Specification

Table 10 Sensor timing chart

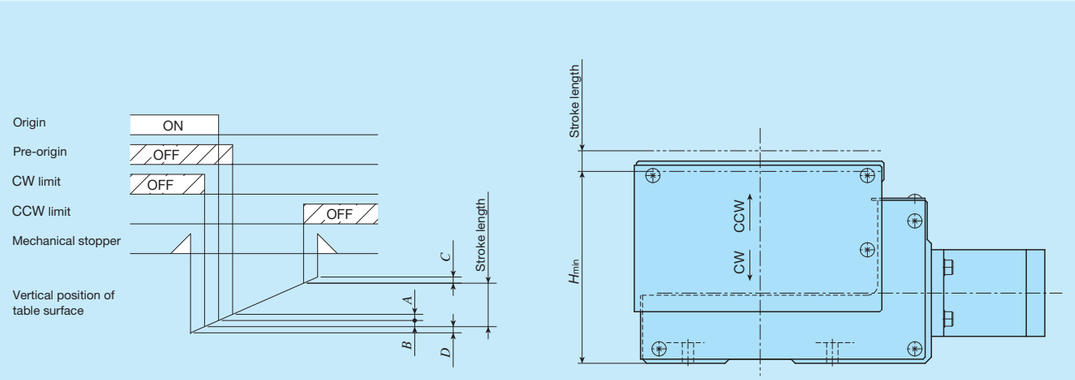

unit: mm

Identification number	A	B	C	D
TZ120X-2	1	1	1	1
TZ120X-4	0.5	0.5	0.5	0.5
TZ200H-2 TZ200X-2	1.5	1	2.5	1
TZ200H-4 TZ200X-4	0.75	0.5	1.25	0.5

TZ

1N=0.102kgf=0.2248lbs.
1mm=0.03937inch

Dimensions of Motor Attachment

TZ120X

AT901

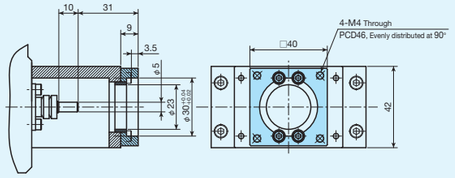

AT903

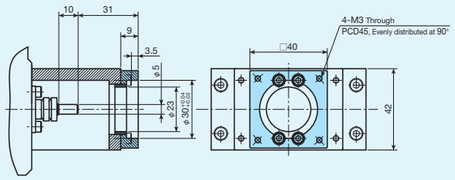

AT905
AT907

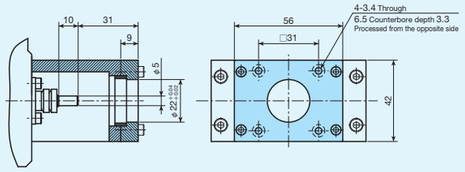

TZ200H, TZ200X

AT902

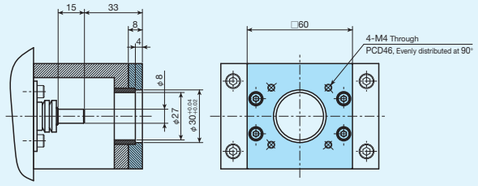

AT904

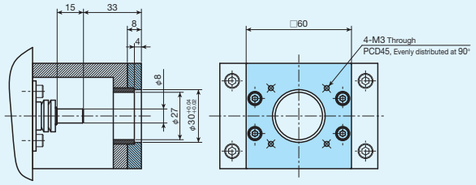

AT906
AT908

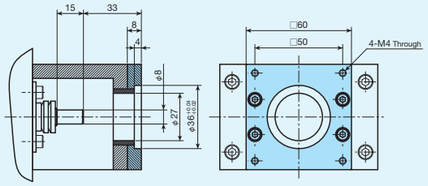

TZ

IKO Precision Elevating Table TZ

TZ120X without linear encoder

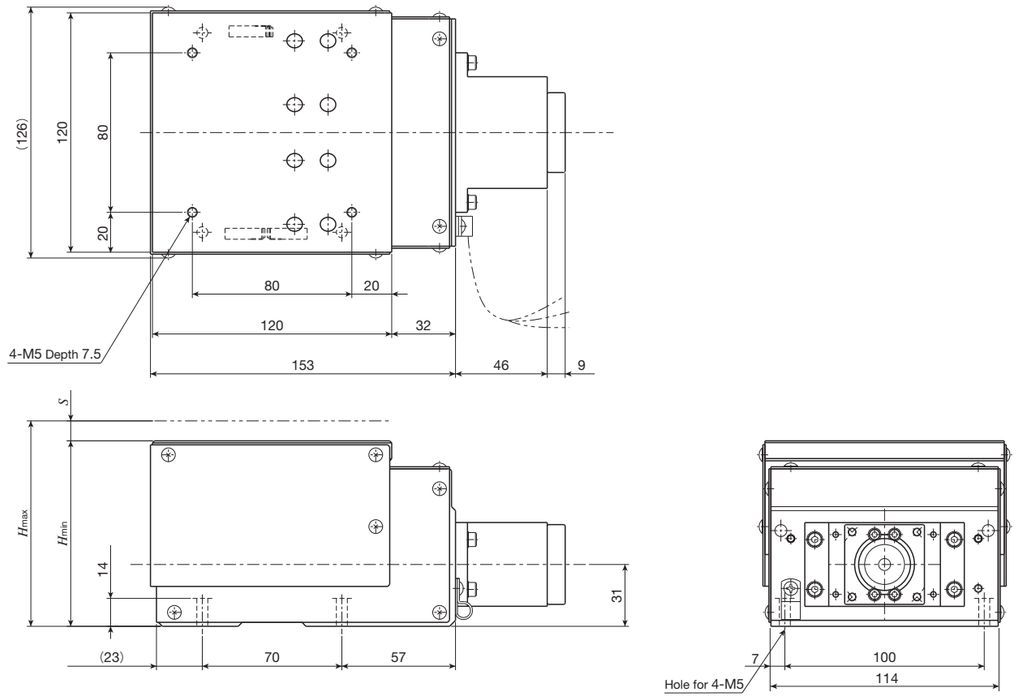

unit: mm

Identification number	Wedge reduction ratio	Mass (Ref.) kg	Mounting holes of bed		Stroke length S
			H_{min} (CW limit position)	H_{max} (CCW limit position)	
TZ120X-2	1 : 2	3.8	93	103	10
TZ120X-4	1 : 4	3.4	84.5	89.5	5

TZ120X with linear encoder

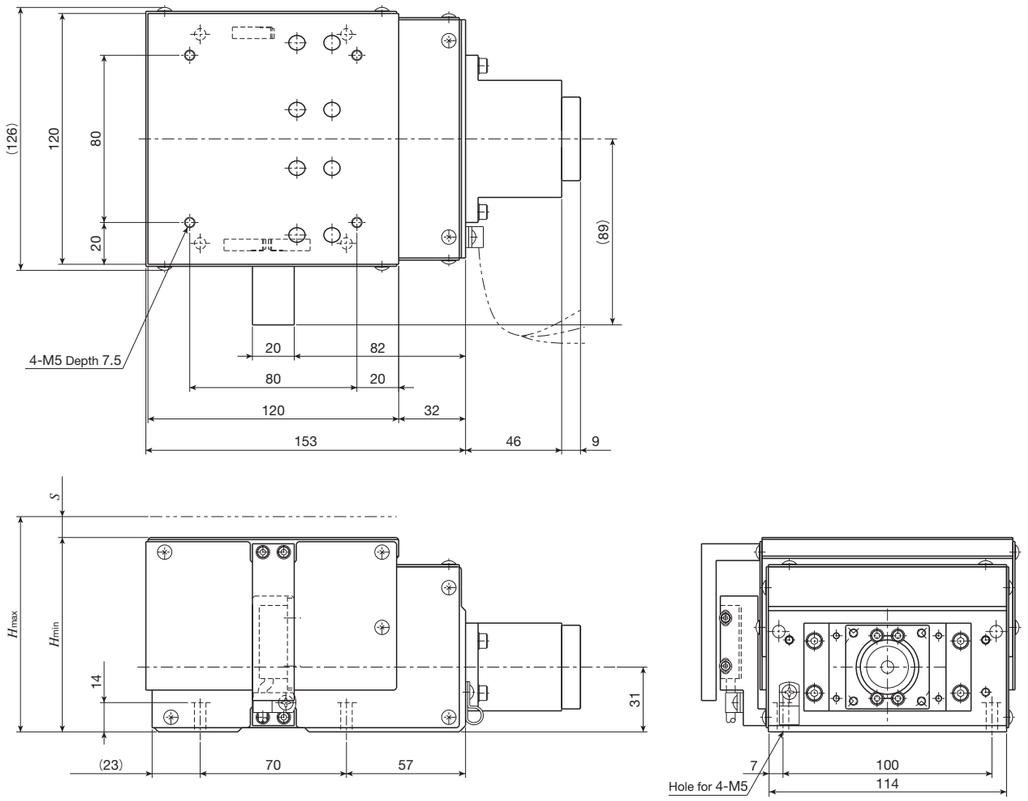

unit: mm

Identification number	Wedge reduction ratio	Mass (Ref.) kg	Mounting holes of bed		Stroke length S
			H_{min} (CW limit position)	H_{max} (CCW limit position)	
TZ120X-2	1 : 2	4.5	93	103	10
TZ120X-4	1 : 4	4.1	84.5	89.5	5

1N=0.102kgf=0.2248lbs.
1mm=0.03937inch

IKO Precision Elevating Table TZ

TZ200H, TZ200X without linear encoder

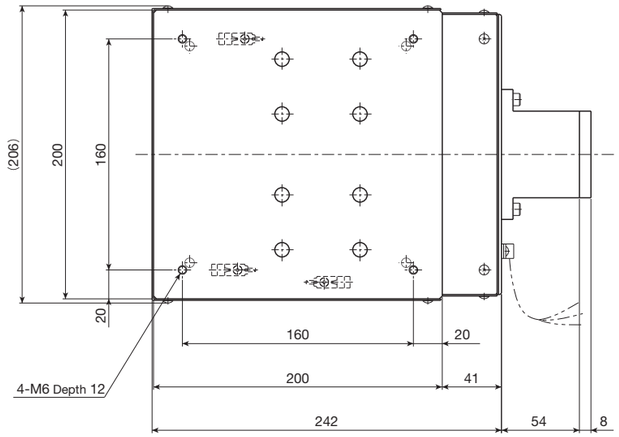

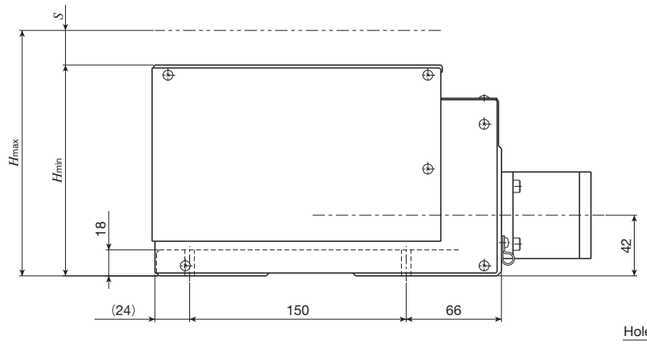

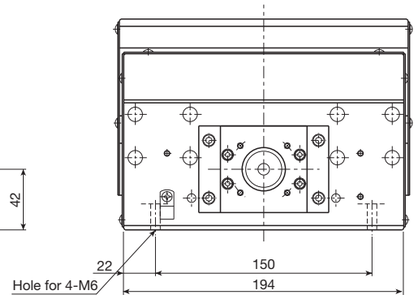

unit: mm

Identification number	Wedge reduction ratio	Mass (Ref.) kg	Mounting holes of bed		Stroke length
			H_{min} (CW limit position)	H_{max} (CCW limit position)	S
TZ200H-2	1 : 2	13.2	146	170	24
TZ200H-4	1 : 4	12.2	132	144	12
TZ200X-2	1 : 2	13.3	146	170	24
TZ200X-4	1 : 4	12.3	132	144	12

TZ200H, TZ200X with linear encoder

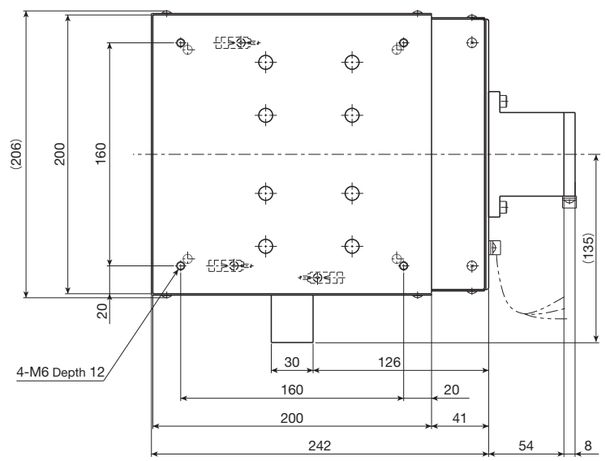

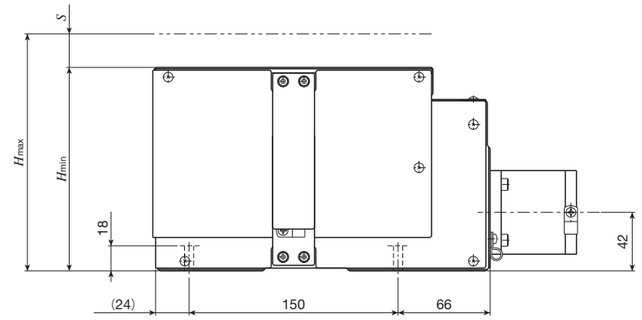

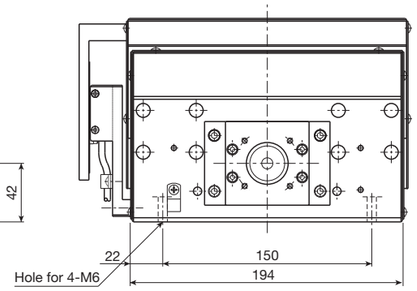

unit: mm

Identification number	Wedge reduction ratio	Mass (Ref.) kg	Mounting holes of bed		Stroke length
			H_{min} (CW limit position)	H_{max} (CCW limit position)	S
TZ200H-2	1 : 2	14.2	146	170	24
TZ200H-4	1 : 4	13.2	132	144	12
TZ200X-2	1 : 2	14.3	146	170	24
TZ200X-4	1 : 4	13.3	132	144	12

1N=0.102kgf=0.2248lbs.
1mm=0.03937inch

Driver Specification for Linear Motor Drive Tables

MR-J4

■ Specification of MR-J4, a driver for NT38V

● Low-voltage (DC24V) specification and compact design of 100×90×30 mm. It contributes to miniaturization of devices and compactness.
● Servo gain adjustment, including machine resonance suppression filter, advanced vibration control Ⅱ, and robust filter, can be completed simply by turning on the one-touch tuning function. Easy driving of the cutting-edge vibration suppression function allows the machine to produce its best performance.
● Machine diagnosis, startup and adjustment of the linear motor can be easily performed thanks to parameter settings, monitor display and machine analyzer of the setup software (MR Configurator2).

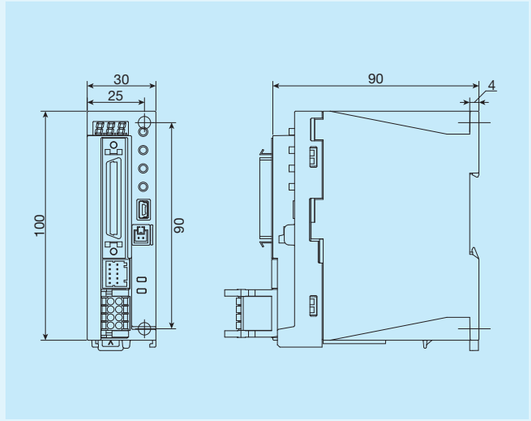

Table 1 Specifications for MR-J4

Item \ Identification Number		MR-J4-03A6-NL156J154/ MR-J4-03A6-NL156J155
Output	Rated voltage	Three-phase AC13V
	Rated current	2.4A
Main circuit power supply input	Voltage	DC24V
	Rated current	2.4A
	Allowable power fluctuation	DC21.6V to 26.4V
Control circuit power supply input	Voltage	DC24V
	Rated current	0.2A
	Allowable power fluctuation	DC21.6V to 26.4V
	Power consumption	5.0W
Power supply for interface		DC24V ±10% (required current capacity: 0.3 A)
Control method		Sine wave PWM control/current control method
Allowable regenerative power for servo amplifier built-in regenerative resistor		0.7W
Dynamic brake		Built-in
Communication function		USB: connection with personal computer, etc. (MR Configurator2 supported)
Encoder output pulse		Supported (ABZ-phase pulse)
Analog monitor		2-channel
Position control mode	Maximum input pulse frequency	4 Mpulses/s (with differential receiver), 200 kpulses/s (with open collector)
	Command pulse magnification	Electronic gears A/Bx A = 1 to 1.6777215, B = 1 to 16777215, 1/10 < A/B < 4000
	Positioning complete width setting	0 pulses to ±65535 pulses (command pulse unit)
Positioning mode		Point table method
Protective function		Overcurrent interrupt, regeneration overvoltage interrupt, overloading interrupt (electric thermal), servomotor overheat protection, encoder error protection, regeneration error protection, undervoltage protection, momentary power failure protection, overspeed protection, excessive error protection, magnetic pole detection protection, linear servo control error protection
Compliant overseas standards	CE marking	LVD:EN 61800-5-1/EN 60959-1 EMC:EN 61800-3
	UL standard	UL 508C（NMM S2）
Structure (protection degree)		Natural air cooling and opening (IP20)
Environmental conditions	Ambient temperature	Operation: 0 to 55˚C (keep freeze free), Storage: -20 to 65˚C (keep freeze free)
	Ambient humidity	Operation/storage: 5% to 90% RH or lower (keep condensation free)
	Atmosphere	Indoors (no exposure to direct sunlight) Must be free from corrosive gas, flammable gas, oil mist and dust
	Altitude	1,000 m or lower
	Vibration resistance	5.9 m/s² or less, 10 Hz to 55 Hz (X, Y, Z directions)
Mass		0.2 kg

NCR

■ Specification of NCR, a driver for NT...H

● The driver and positioning unit are integrated, and the system is miniaturized with its wiring streamlined.
● Higher reliability and usability such as driftless, elimination of adjustment fluctuation, improvement of man-machine interface have been pursued with digital control.
● Easy positioning operation and pulse train operation are supported by mode selection, for applications to wide range of usages.
● Torque control and speed control are available.
● Control suitable for machine rigidity is made possible by full-scale software servo functions such as linear / S-curve acceleration and deceleration, feed forward, torque command filter, gain switching at shutdown and low speed, disturbance compensation control, etc.
● Peripheral devices such as touch panel, higher-level controller, etc. can be connected via serial communication.
● Dedicated editing software can be connected via USB 2.0 (full speed).

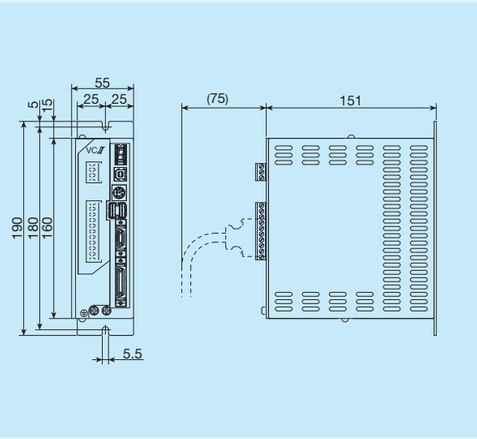

Table 2 Specifications for NCR

Item \ Identification Number			NCR-DDA0A1A-051D-T08
Basic specification	Maximum rated current		1.1 Arms
	Max. momentary current		3.3 Arms
	Power plant capacity		0.15kVA
	Input power (main circuit and control circuit)		Single-phase AC100～115V (allowable power fluctuation AC90～121V) 50/60Hz ±5%
	Control method		Three-phase sine wave PWM method
	Control mode		Position (position control data / pulse train)
Input/ Output function	Command input	Pulse train command	Line driver system is supported The maximum input frequency is indicated below (1) Pulse with 90-degree phase difference: 4Mpps (16Mpps after 4-time multiplication) (2) Directional pulse: 4Mpps (3) Directional + shift pulse: 4 Mpps
		Speed control operation	Analog speed command and internal speed command (3 points)
		Torque control operation	Analog torque command and internal torque command (3 points)
		Easy positioning operation	3 positioning modes: Manual mode / Return to origin mode / Easy positioning mode
	Contact input signal		[8 basic input signal points (initial value)] Servo on, reset, command pulse input prohibition, mode selection 1, mode selection 2, startup, speed selection, torque selection <Following signals are used by assigning remote control or input signals> Emergency stop, proportional control, address specification, speed override, deviation clear, torque limit, forward direction overtravel, reverse direction overtravel, etc.
	Contact output signal		[4 basic output signal points (initial value)] Servo ready, alarm, warning, positioning complete <Following signals are used by assigning remote control or output signals> Torque limit, speed zero, in speed operation mode, in torque operation mode, in easy positioning mode, in pulse train operation mode, encoder marker, etc.
	Encoder feedback pulse output		Pulse train output with 90-degree phase difference (frequency dividing output allowed. The maximum output frequency of 2 signals of A / B phase is 20Mpps after 4-time multiplication)
	Encoder feedback pulse input		Pulse train input with 90-degree phase difference (The maximum input frequency of 2 signals of A / B phase is 20Mpps after 4-time multiplication)
	Monitor output		(1) Analog monitor: 2 points (2 points selected by parameters from various motion status can be monitored.) (2) Various types of monitoring is possible with USB-ready dedicated editing software.
Internal function	Protective function		IPM failure, overvoltage, undervoltage, overspeed, overload, regeneration resistance overload, deviation overflow, communication failure, data error, CPU failure, encoder failure, automatic magnetic pole detection failure, absolute encoder failure, etc.
	Communication function		Various data can be transmitted / received via serial communication (RS-422A). Dedicated editing software can be connected via USB 2.0 (full speed)
Operating environment	Ambient temperature in operation / Storage temperature		0 to 55˚C / -20 to 66˚C
	Operating humidity		85%RH or lower (keep condensation free)
	Vibration resistance		0.5G 10～55Hz
	Service space		Altitude of 1000 m or below, indoor (no corrosive gas and dust)
Mass			1.0kg

ADVA

■ Specifications for ADVA

■ Applicable model numbers
NT series: NT55V, NT80V, NT88H, NT...XZ, NT...XZH
SA series: all model numbers
LT series: all model numbers

- In addition to the conventional pulse train command input, high speed motion network EtherCAT is also supported.
- 10 input terminals, 6 output terminals, and analog input (0 to ±10 V) can be controlled by intelligent terminals.
- The high controllability shortens the settling time, realizing further improvement of productivity.
- Machine diagnosis, startup and adjustment of linear motor can be easily performed thanks to parameter settings, monitor display, operation trace and automatic tuning function of the setup software.

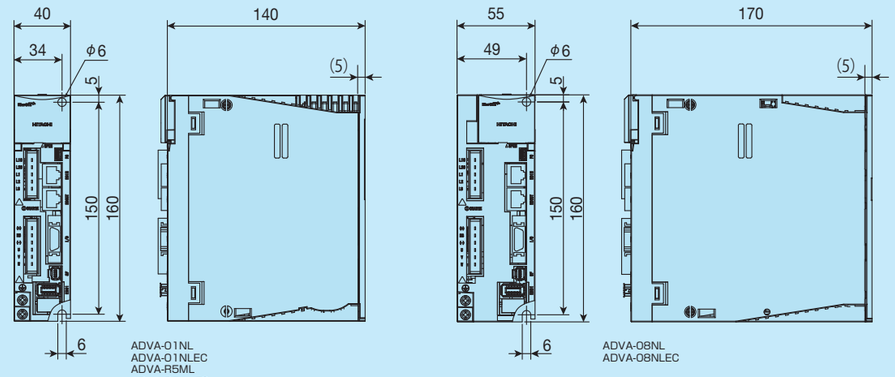

Table 3 Specifications for ADVA

Item \ Identification number		ADVA-01NL ADVA-01NLEC	ADVA-08NL ADVA-08NLEC	ADVA-R5ML ADVA-R5MLEC
Basic specification	Input power	Single-phase / Three-phase AC 200 to 230 V 50 / 60Hz		Single-phase AC100 to 115V 50 / 60Hz
	Rated current / momentary current	1.2Arms / 3.6Arms	5.1Arms / 15.3Arms	1.2Arms / 3.6Arms
	Power plant capacity	0.3kVA	1.3kVA	0.3kVA
	Protective structure (1)	Semi-enclosed IP20		
	Control mode	Position control / Speed control / Thrust force control		
Input/Output relation function	Speed command	Analog input: 0 to ±10 V / Maximum speed (gain configurable) or EtherCAT		
	Thrust force command	Analog input: 0 to ±10 V / Maximum thrust force (gain configurable) or EtherCAT		
	Position command	Line driver signal: 20 Mpps (non-isolated input / after 4-time multiplication) Open collector signal: 2 Mpps (isolated input / after 4-time multiplication) or EtherCAT		
	Contact input / output	[Input] Intelligent terminal selects 10 input terminal (6 input terminal for EtherCAT specification) function by parameter DC12 / 24 V Contact signal / Open collector signal input (with internal DC24 V power supply) [Output] Intelligent terminal selects 6 output terminal (4 output terminal for EtherCAT specification) function by parameter (Open collector signal output: sink output)		
Internal function	Built-in operator	Pulse train command specification: Five digit numeric display, five key push button / DIP switch (Modbus communication setting)		
		EtherCAT specification: 2-digit numeric display, DIP switch (node address setting for EtherCAT)		
	External operator	Windows 7/8 (32-bit, 64-bit) PC can be connected (USB 2.0 full speed)		
	Regenerative braking circuit	Built-in		
	Dynamic brake (2)	Built-in (motion condition configurable)		
	Protective function	Overcurrent, overload, braking resistor overload, main circuit overvoltage, memory error, main circuit under voltage, CT failure, CPU error 1, external trip (motor temperature error), servo ON ground detection, control circuit under voltage, servo amplifier temperature error, drive prohibition error, power module failure, safety circuit failure, emergency shutdown, encoder failure, mismatch error, power reactivation request, magnetic pole position estimation error, magnetic pole position estimation not executed, position deviation error, speed deviation error, overspeed error, momentary power failure, main circuit power supply failure, drive range error (network communication error, DC synchronization error, under voltage display)		
Operating environment	Ambient temperature in operation/ Storage temperature (3)	0 ～ 55℃ / −10 ～ 70℃		
	Operating humidity	20 to 90% RH (keep condensation free)		
	Vibration resistance (4)	5.9m/s² (0.6G) 10 to 55Hz		
	Service space	Altitude of 1000 m or below, indoor (no corrosive gas and dust)		
Mass		0.7kg	1.2kg	0.7kg

Notes (1) Protection method is compliant with JEM1030.
(2) Use the dynamic brake for emergency stop
(3) The storage temperature is the temperature during transportation.
(4) Compliant with JIS C60068-2-6:2010.

● Setup software

- Used for setting, referencing, changing, printing and saving driver parameters.
- Allows for real-time monitoring of operational status and output status.
- Indicates speed and current, etc. on charts.
- Supports commissioning and gain tuning.

Table 4 Operating environment of the setup software

Item	Operating conditions
PC	CPU: Pentium 4 1.8 GHz or higher HDD free space: 1 GB or more Display resolution: 1024x768 or higher recommended
OS	Windows Vista 32-bit SP1 Windows 7 (32-bit, 64-bit) Windows 8 (32-bit, 64-bit)

Remark: Windows® is a registered trademark of Microsoft Corporation in USA and other countries.
Pentium is a registered trademark of Intel Corporation in USA and other countries.

● Automatic tuning function

By using the automatic tuning function of the setup software for ADVA, non-expert users can easily perform high-accuracy gain adjustment.

<Operating conditions>
Main body: NT55V25/05R + ADVA-01NL/NT55V25
Carrying mass: 200g Speed: 500mm/s Positioning complete width: ±5μm Traveling distance: 10mm
Acceleration/deceleration time: 12ms

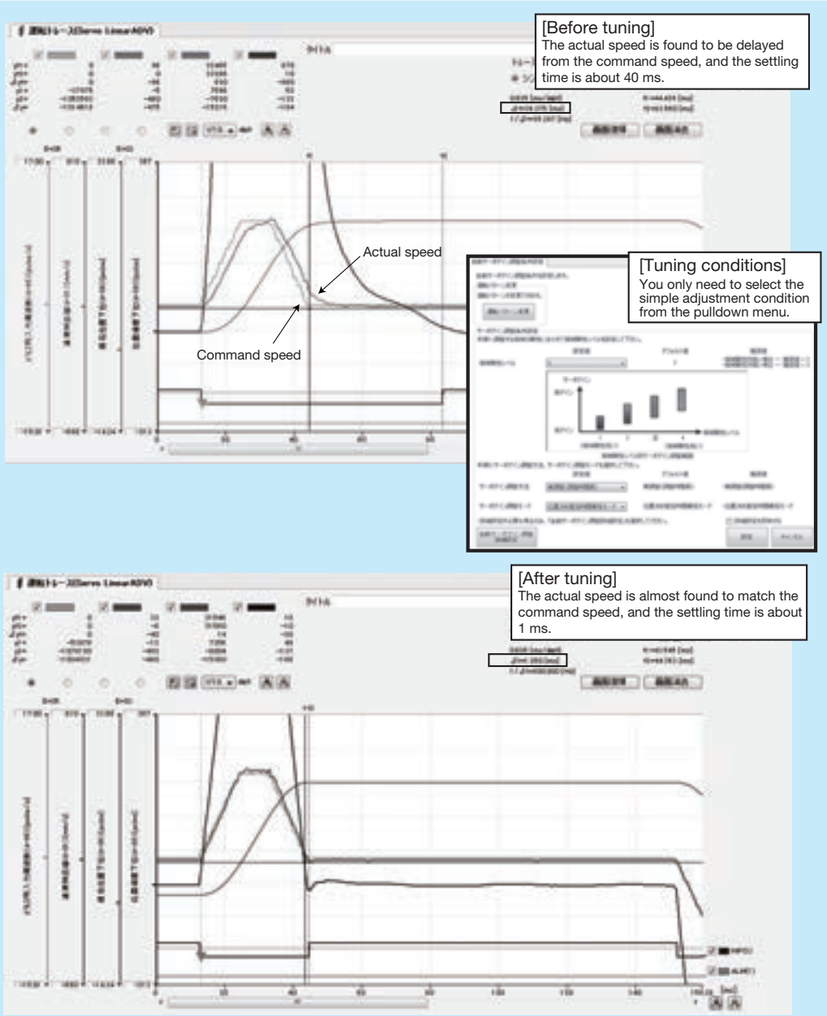

Fig. 2 Automatic tuning

MR-J4

■ Specifications for MR-J4

■ Applicable model numbers
NT series: NT55V, NT80V
SA series: all model numbers

- Supports SSCNET Ⅲ/H (high-speed serial bus). Higher speed and accuracy are realized by optical communication system.
- Servo gain adjustment, including machine resonance suppression filter, advanced vibration control II, and robust filter, can be completed simply by turning on the one-touch tuning function. Easy driving of the cutting-edge vibration suppression function allows the machine to produce its best performance.
- Machine diagnosis, startup and adjustment of linear motor can be easily performed thanks to parameter settings, monitor display and machine analyzer of the setup software (MR Configurator2).

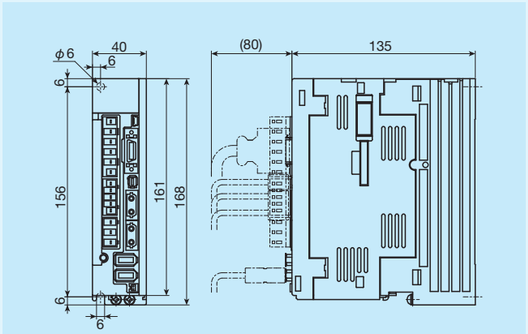

Table 5 Specifications for MR-J4

Item / Identification Number			MR-J4-10B-RJ
Basic specification	Output	Rated voltage	Three-phase AC170V
		Rated current	1.1A
	Main circuit power supply	Voltage / Frequency	Single-phase / Three-phase AC200-240V 50/60Hz
		Allowable power fluctuation	Single-phase / Three-phase AC170-264V
		Allowable frequency fluctuation	Within ± 5%
	Control circuit power supply	Voltage / Frequency	Single-phase AC200-240V 50/60Hz
		Allowable power fluctuation	Single-phase AC170-264V
		Allowable frequency fluctuation	Within ± 5%
		Power consumption	30W
	Power supply for interface		DC24V ± 10% (required current capacity: 0.3A (includes CN8 connector signal))
	Structure (protection class)		Natural air cooling and opening (IP20)
	Control method		Sine wave PWM control/current control method
	Machine end encoder interface		Mitsubishi high-speed serial communication / ABZ-phase differential input signal
Input/Output function	Encoder output pulse		Supported (ABZ-phase pulse)
	Analog monitor		2ch
Internal function	Communication function		USB: connection with personal computer, etc. (MR Configurator2 supported)
	Dynamic brake		Built-in
	Protective function		Overcurrent interrupt, regeneration overvoltage interrupt, overloading interrupt (electric thermal), servomotor overheat protection, encoder error protection, regeneration error protection, undervoltage protection, momentary power failure protection, overspeed protection, excessive error protection, magnetic pole detection protection, linear servo control error protection
Operating environment	Ambient temperature		0 to 55˚ C (keep freeze free), Storage: 20 to 65˚ C (keep freeze free)
	Ambient humidity		90%RH or lower (keep condensation free), Storage: 90%RH or lower (keep condensation free)
	Atmosphere		Indoor (no exposure to direct sun light), must be free from corrosive gas, flammable gas, oil mist and dust
	Altitude		1 000m or lower
	Vibration resistance		5.9m/s^2 or less, 10Hz to 55Hz (X, Y, Z directions)
Mass			0.8kg

Motion Network

Drivers for linear motor drive tables include those supporting motion network EtherCAT, SSCNET Ⅲ/H, and MECHATROLINK. Motion network realizes higher performance and higher accuracy of devices free from pulse frequency constraint in pulse train command, noise effects in analog command (voltage command), voltage drop due to cable length and effects of temperature drifting. Reduction of wiring can also be achieved, so synchronization system with more than one table can easily be established.

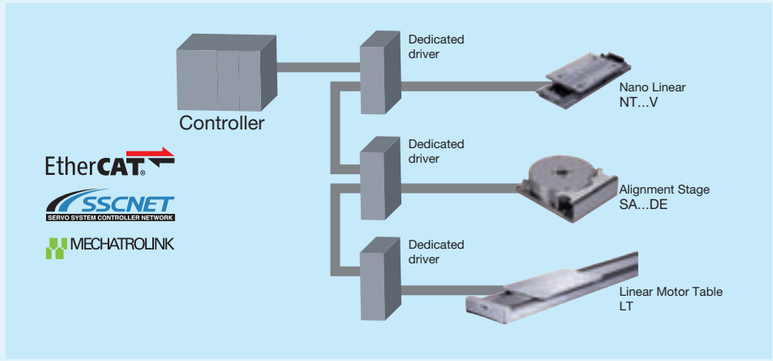

Model	Features
EtherCAT	This is an Ethernet-based open network communication system developed by Beckhoff of Germany, allowing the real time control. High speed communication and high accuracy inter-node synchronization realize the higher performance and higher accuracy of devices. In addition, Ethernet cables available on the market can be used and various wiring types can be supported.
SSCNET Ⅲ/H	This is a motion network communication system for servo system control developed by Mitsubishi Electric Corporation. It applies the optical fiber cables, so noise immunity is improved relative to conventional SSCNET.
MECHATROLINK	The open field network communication that connects the controller and various components. Developed by Yaskawa Electric Corporation and managed by MECHATROLINK Members Association.

General Explanation

IKO Selection of Precision Positioning Table

IKO Precision Positioning Table should be selected taking the points related to the required conditions into careful consideration. Typical selection procedure is shown below.

1 Check for operational condition
- Stroke length to be used
- Mounting space (height, width, length)
- Mounting direction
- Applied load size and direction
- Operation pattern
- Operating environment

2 Check for the required accuracy
- Positioning accuracy
- Positioning repeatability
- Parallelism in table motion A, B
- Straightness
- Squareness

3 Temporary selection of table model
- Feeding mechanism of slide table
- Size
- Stroke length
- Number of axes

4 Temporary selection of motor
- Type and size of motor

5 Consideration of maximum speed and resolution
- Ball screw lead
- Maximum number of revolutions of the motor
- Encoder specification

6 Consideration of operation patterns
- Marginal acceleration time
- Effective torque
- Inertia
- Positioning time

Re-consideration

Determination

7 Consideration of system
- Selection of controller
- With or without sensor
- Connection cord
- Interface with external devices

8 Final checking
- Re-check for operational condition
- Cost and delivery
- Additional machining
- Special table

IKO Characteristics of Precision Positioning Table

Series	Model	Stroke length mm	Positioning repeatability	Positioning accuracy	High speed	Rigidity
Precision Positioning Table TE	TE···B	50 ～ 800	○	○	○	○
Precision Positioning Table TU	TU	30 ～ 1 400	○	○	○	○
Precision Positioning Table L	TSL···M	50 ～ 1 000	○	○	○	○
Precision Positioning Table LH	TSLH···M	100 ～ 800	○	○	○	◎
	CTLH···M	100 ～ 500	○	○	○	◎
Super Precision Positioning Table TX	TX···M	100 ～ 800	◎	◎	○	◎
	CTX···M	100 ～ 400	◎	◎	○	◎
Cleanroom Precision Positioning Table TC	TC···EB	50 ～ 800	○	○	○	△
Micro Precision Positioning Table TM	TM	10 ～ 60	○	○	△	△
Precision Positioning Table TS/CT	TS	25 ～ 250	○	○	△	△
	CT	15 ～ 250	○	○	△	△
Precision Positioning Table LB	TSLB	300 ～ 1 200	△	△	◎	○
Nano Linear NT	NT···V, XZ, XZH	10 ～ 120	◎	△	◎	△
	NT···H	25 ～ 65	◎	◎	○	○
Alignment Stage SA	SA···DE/X	10 ～ 20	◎	△	○	△
Linear Motor Table LT	LT···CE	200 ～ 1 200	◎	△	◎	△
	LT···LD	240 ～ 2 760	◎	△	◎	○
	LT···H	410 ～ 2 670	◎	△	◎	○
Alignment Module AM	AM	30 ～ 120	○	○	○	○

Feeding mechanism	Applied motor	With or without sensor	Linear motion rolling guide	Applications
C-Lube ball screw	AC servomotor/ Stepper motor	Selection	U-shaped Track Rail Linear Way with C-Lube built in	Assembler, Processing machine, Measuring equipment
Ball screw			U-shaped Track Rail Linear Way	Assembler, Processing machine, Measuring equipment
C-Lube ball screw		Provided as standard	C-Lube Linear Way Parallel arrangement of 2 ways	Assembler, Processing machine, Measuring equipment
				Precision processing machine, Precision measuring equipment Machine tool, Assembler
	AC servomotor		C-Lube Linear Roller Way Super *MX* Parallel arrangement of 2 ways	Precision processing machine, Precision measuring equipment Machine tool, Assembler
Ball screw	AC servomotor/ Stepper motor	Selection	U-shaped Track Rail Linear Way with C-Lube built in	Semiconductor related device, LCD related device
			Linear Way Parallel arrangement of 2 ways	Precision measuring equipment, Assembling machine
			Anti-Creep Cage Crossed Roller Way Crossed Roller Way	Precision measuring equipment, Prober Image processing unit, Exposure equipment
Timing belt	Stepper motor	Provided as standard	Linear Way Parallel arrangement of 2 ways	High speed conveyor, Palette changer
AC linear servomotor			C-Lube Linear Way Linear Way Parallel arrangement of 2 ways	Semiconductor related device, Medical equipment
			Anti-Creep Cage Crossed Roller Way	Semiconductor related system, Precision measuring equipment
			C-Lube Linear Way Parallel arrangement of 2 ways	Semiconductor related device, Medical equipment
				Semiconductor related device, High speed conveyor
Ball screw	AC servomotor/Stepper motor		U-shaped Track Rail Linear Way	Semiconductor related device, LCD related device

1N=0.102kgf=0.2248lbs.
1mm=0.03937inch

Size of Precision Positioning Table

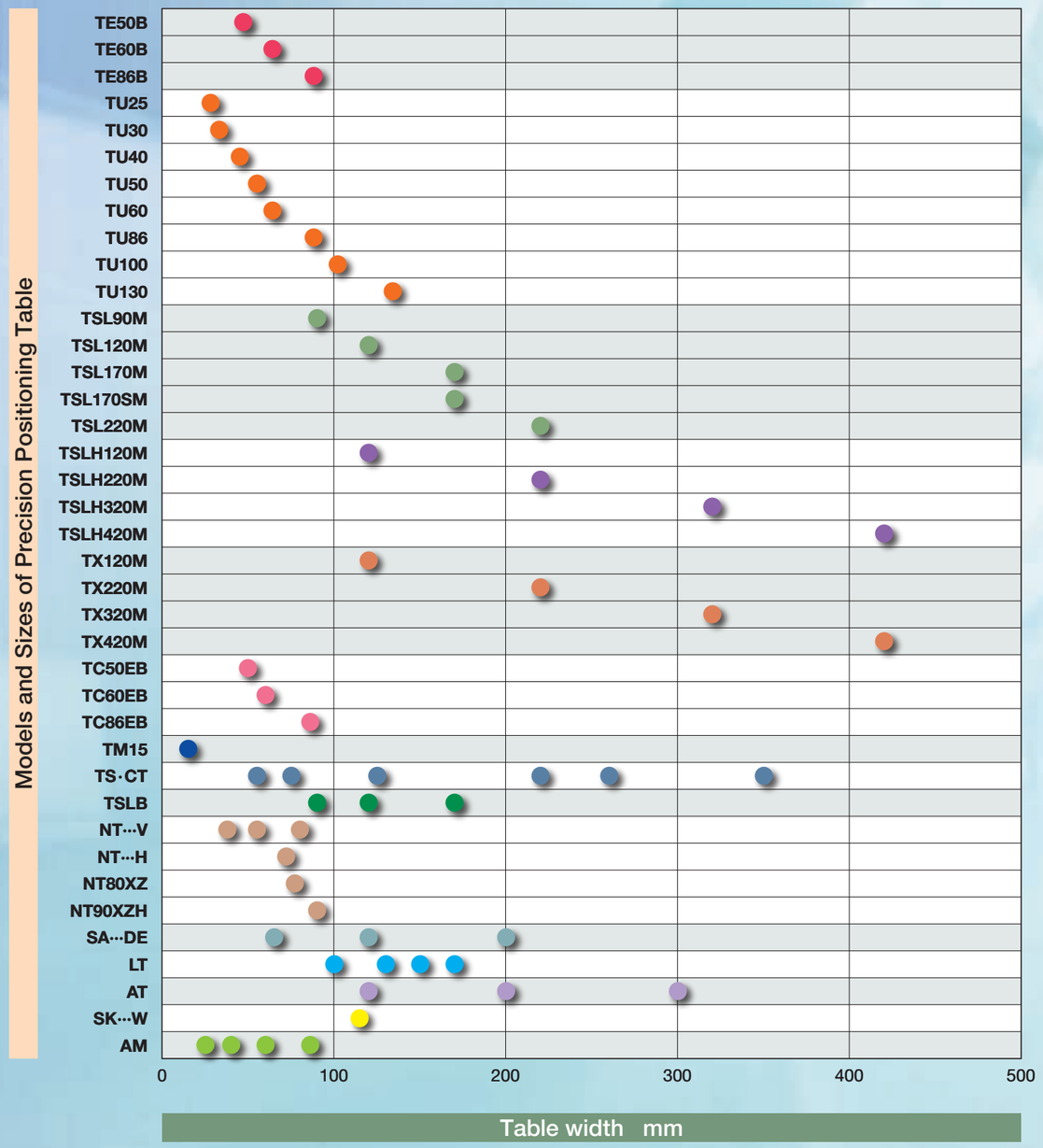

How to see the above graph

- The values shown in the graph are for reference. For details, see the explanation of each model.

Stroke Length of Precision Positioning Table



How to see the above graph

- The values shown in the graph are for reference. For details, see the explanation of each model.
- Length of a bar represents a standardized range of stroke length.

1N=0.102kgf=0.2248lbs.
1mm=0.03937inch

Positioning Repeatability of Precision Positioning Table

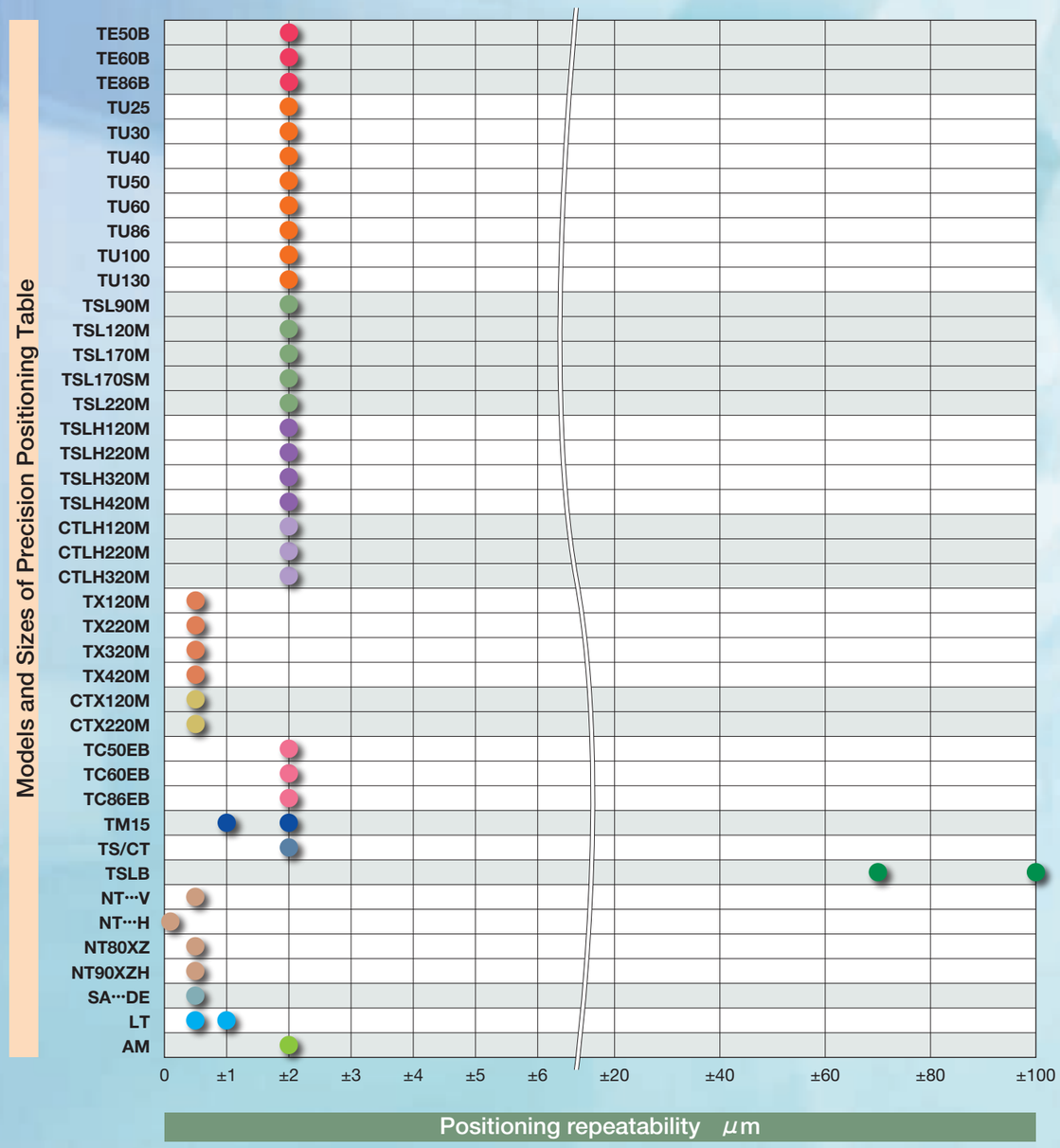

How to see the above graph

- The values shown in the graph are for reference. For details, see the explanation of each model.
- For models of ball screw drive, the value of the case selected ground ball screw is indicated.
- When two or more values are indicated for a model, this means that the applicable value depends on the stroke length.
- For TU, the value of the standard table is indicated.
- CTLH···M, CTX···M and CT are tables of two-axis specification.
- SA···DE represents value in X-axis.

Positioning Accuracy of Precision Positioning Table

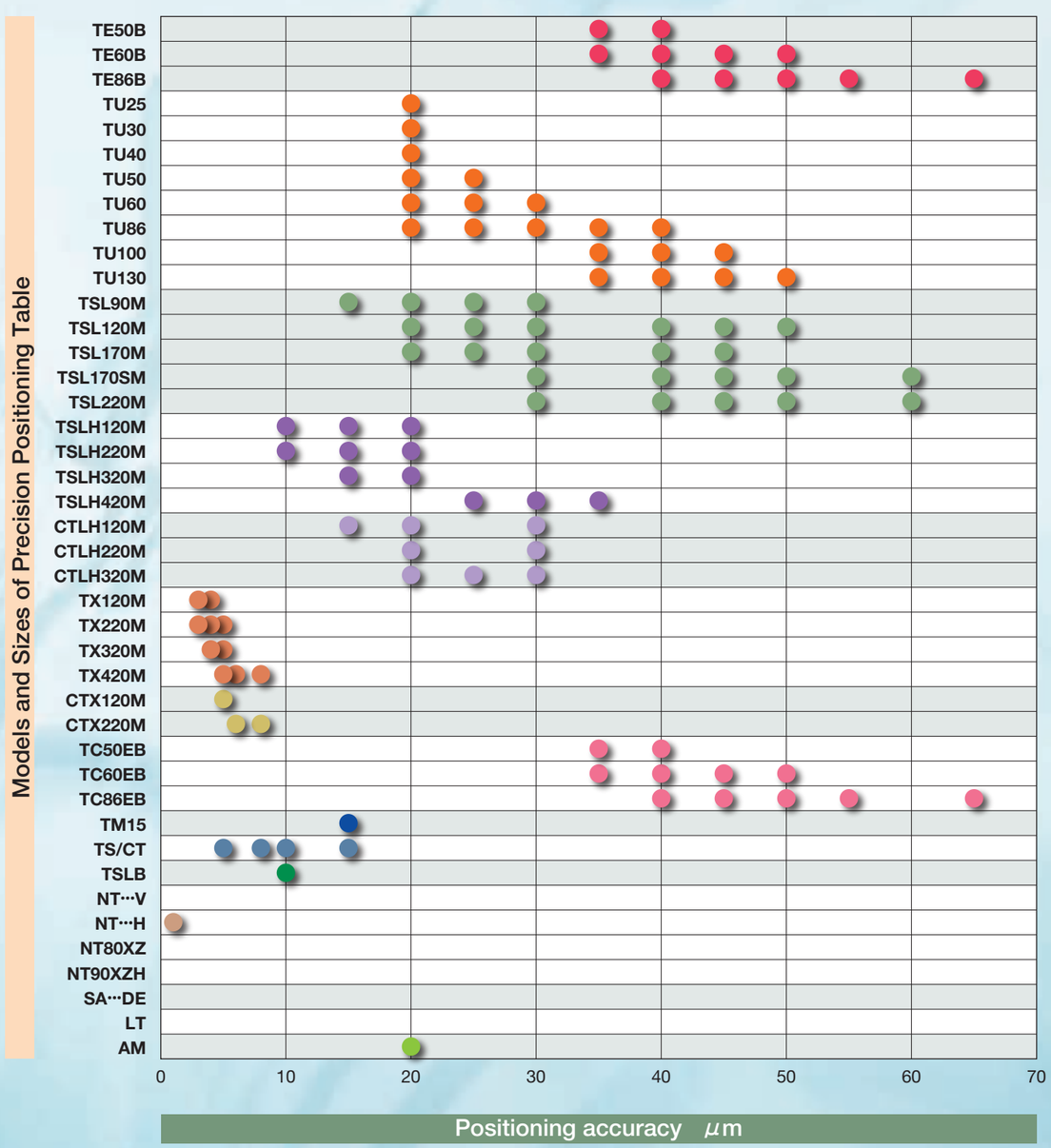

How to see the above graph

- The values shown in the graph are for reference. For details, see the explanation of each model.
- For models of ball screw drive, the value of the case selected ground ball screw is indicated.
- When two or more values are indicated for a model, this means that the applicable value depends on the stroke length.
- For TU, the value of the standard table is indicated.
- CTLH···M, CTX···M and CT are tables of two-axis specification.

1N=0.102kgf=0.2248lbs.
1mm=0.03937inch

Maximum Speed of Precision Positioning Table

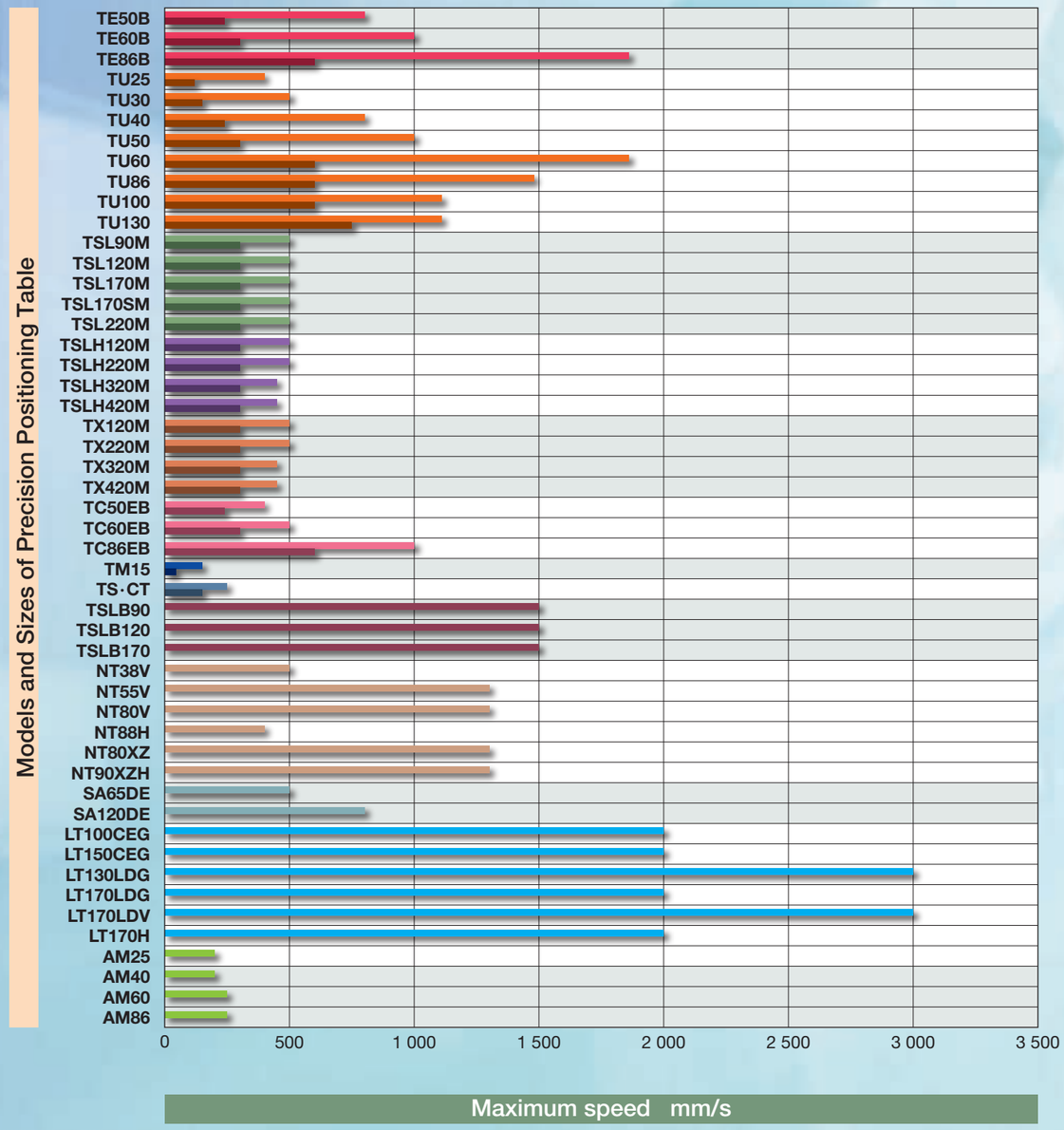

How to see the above graph

- The values shown in the graph are for reference. For details, see the explanation of each model.
- For models of ball screw drive, the value with the longest ball screw lead allowable is indicated.
- The upper sections indicate values of AC servomotor, whereas the lower sections indicate values of stepper motor specification.
- The ball screw drive type may sometimes be restricted by the allowable number of revolution of ball screw depending on the stroke length.

Carrying Mass of Precision Positioning Table

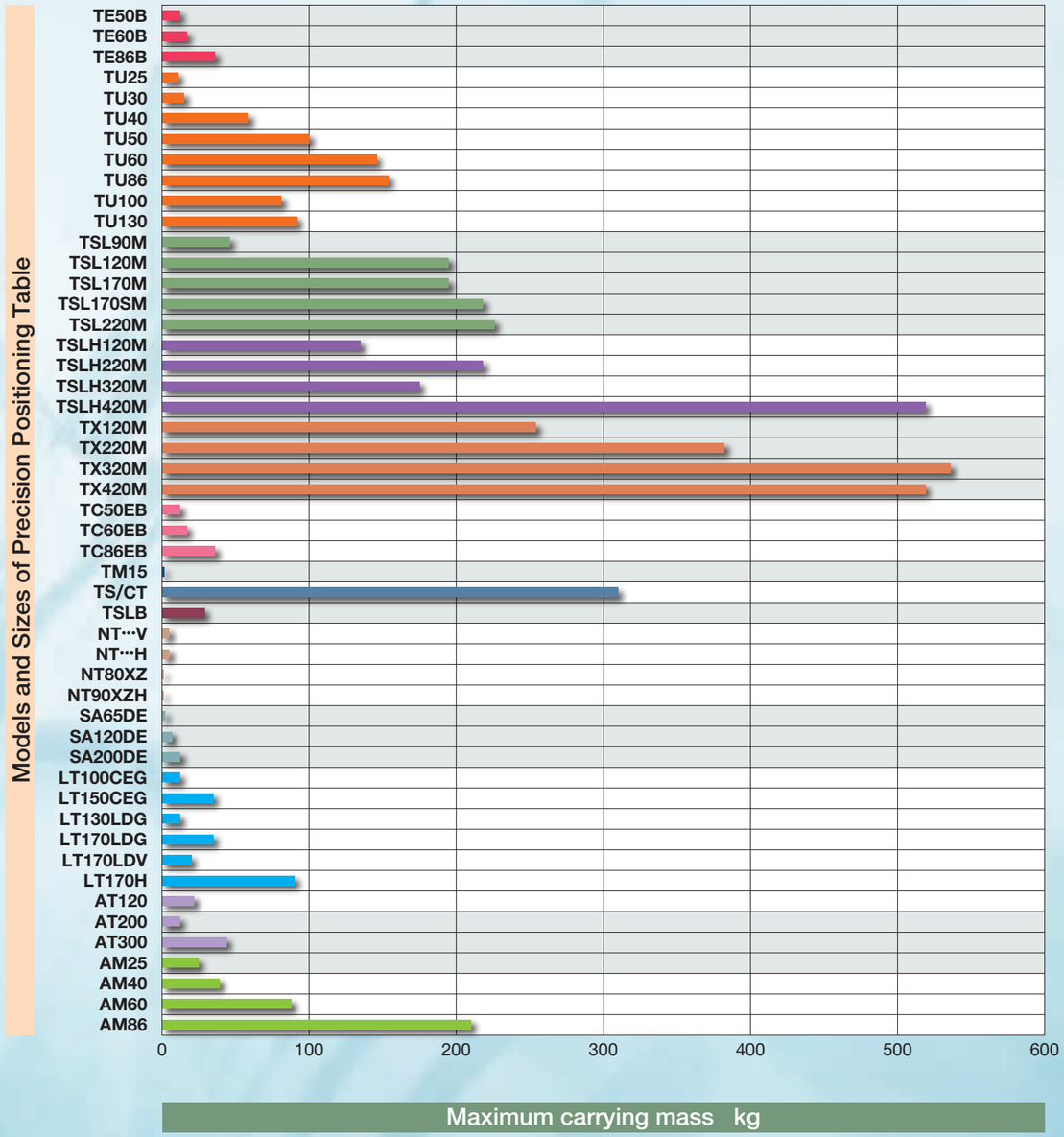

How to see the above graph

- The values shown in the graph are for reference. For details, see the explanation of each model.
- Values of LT, NT···V, NT···H, NT···XZ, NT···XZH, and SA···DE indicate the maximum load masses.

1N=0.102kgf=0.2248lbs.
1mm=0.03937inch

Accuracy

Accuracy standard of precision positioning table varies depending on models and measurement methods are described below. In addition, model testing according to the use conditions such as dynamics testing may be conducted on request. Please contact IKO for details.
Precision positioning table is supplied with an inspection sheet or certificate of passing inspection regarding accuracy standard of each model.

Positioning repeatability

Repeat positioning to any one point from one direction 7 times to measure the stop position and obtain 1/2 of the maximum reading difference.
In principle, perform this measurement at the center and each end of the stroke length and take the maximum obtained value as the measurement value. Indicate the 1/2 of the maximum difference with ±.

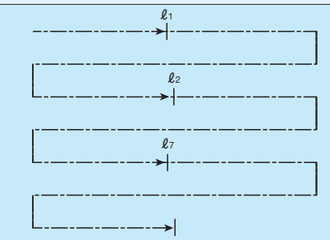

1/2 of largest difference in measurement values, ℓ_1, ℓ_2, $\cdots\ell_7$

Positioning accuracy

Perform positioning successively in the certain direction from the reference position, measure the difference between actual travel distance at each position and the theoretical travel distance, and indicate the maximum difference within the stroke length as an absolute value.

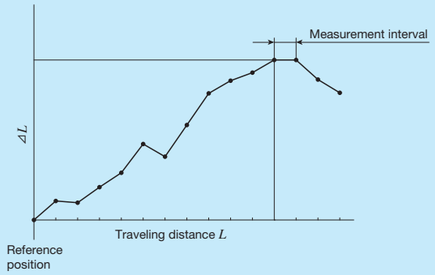

ΔL= (Distance actually traveled) – (Command value for traveling distance)

Attitude accuracy (pitching and yawing)

The tilt angles for pitching direction(Mp) and yawing direction(My) of the table within the stroke range are measured with a laser angle measurement system, and the measured value is the value of the maximum reading error.

●Pitching (M_p)
Vertical angle change on table travel axis

●Yawing (M_y)
Horizontal angle change on table travel axis

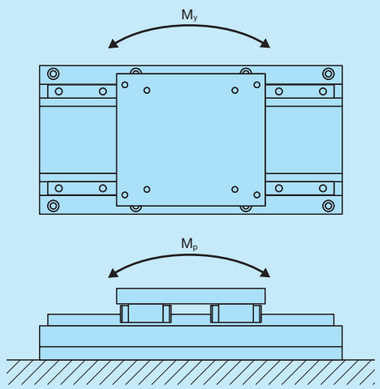

Parallelism in table motion A

Refers to parallelism (indicator fix) of the slide table motion and flat surface (precision positioning table mounting surface).

● When the stroke is shorter than the slide table length
Fix the test indicator on the stool on which the precision positioning table is mounted, place the straight-edge on the slide table, and apply the test indicator at the center of the slide table. Make a measurement across almost whole area of the stroke length in X and Y directions, and take the maximum reading difference as a measurement value.

● When the stroke is longer than the slide table length
Fix the test indicator on the stool on which the precision positioning table is mounted, place the straight-edge on the slide table, and apply the test indicator at the center of the slide table. Make a measurement across almost whole area of the stroke length while moving the table by the length of the table during strokes in X and Y directions, and take the maximum reading difference as a measurement value.

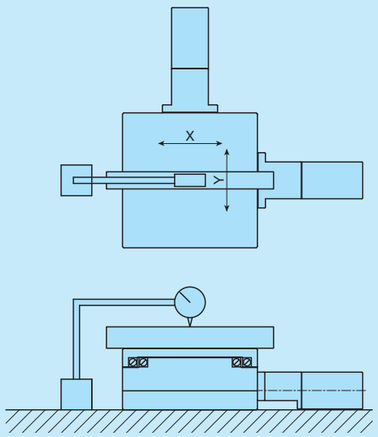

Parallelism in table motion B

Refers to parallelism (indicator travel) of the slide table motion and flat surface (table mounting surface).
Fix the indicator at the center of the slide table, apply the test indicator on the stool on which the precision positioning table is mounted, make a measurement across almost whole area of the stroke length in X and Y directions, and take the maximum reading difference as a measurement value.

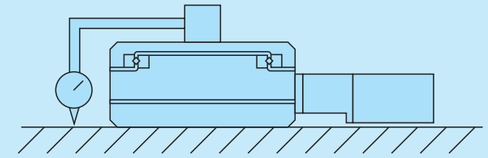

Straightness

Refers to an extent of deviation from the ideal straight line of the slide table motion, which should be linear.
・Straightness in horizontal: Motion of the slide table travel axis in left and right (horizontal) direction.
・Straightness in vertical: Motion of the slide table travel axis in up and down (vertical) direction.
These are measured by a test bar and indicator or laser running straightness measurement system. The measurement value is represented by the interval between two straight lines in parallel with each other, when placed so that the interval becomes minimal.

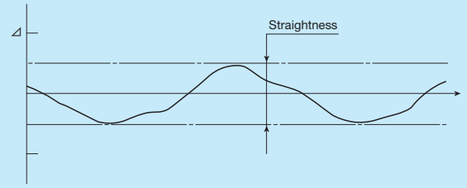

Squareness of XY motion

Refers to squareness of X-and Y-axis motions.
Fix a square scale on the slide table taking either travel axis direction as a reference, apply the test indicator perpendicular to the reference travel axis and take the maximum reading difference within the stroke length of the axis as a measurement value.

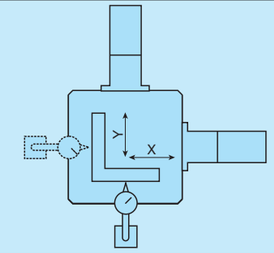

Backlash

Feed to the slide table and take reading of the test indicator when it is moved slightly as a reference. Then, move the slide table in the same direction with the given load from such condition without the feed gear and release the load. Obtain the difference from the reference value at this point.
Perform this measurement at the center and each end of the stroke length and take the maximum obtained value as the measurement value.

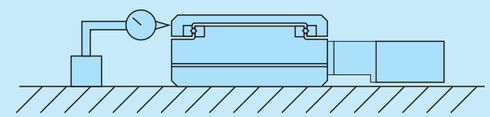

Lost motion

Perform positioning in the forward direction for one position and measure the position (ℓ_1 in the figure). Then give a command to move it in the same direction and give the same command in the backward direction from the position to perform positioning in the backward direction. Measure the position (ℓ_1' in the figure). Further, give a command to move it in the backward direction and give the same command in the forward direction from the position to perform positioning in the forward direction. Measure the position (ℓ_2 in the figure). Subsequently, repeat these motions and measurements and obtain the difference between average values of stop position of the 7 positionings in forward and backward directions.
Perform this measurement at the center and each end of the motion and take the maximum obtained value as the measurement value.

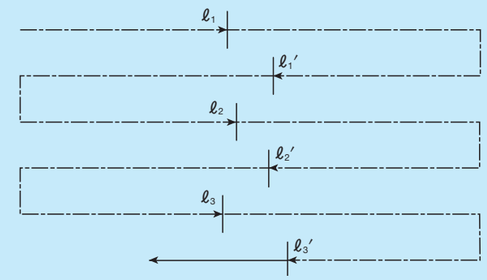

Measurement value of lost motion

$$= \left|\frac{1}{7}(\ell_1+\ell_2+\cdots\ell_7)-\frac{1}{7}\left(\ell_1'+\ell_2'+\cdots+\ell_7'\right)\right|\max$$

1N=0.102kgf=0.2248lbs.
1mm=0.03937inch

Measurement of parallelism during table elevating

At the lower most step of the table (H_{min}), align the indicator with 0 value at the measurement point E on the table upper surface with the table mounting surface as a reference, and measure heights at the remaining 8 points (A to I) with the value as a reference.
Lift up the table and perform the same measurement at middle (H_{mid}) and upper (H_{max}) steps. Then obtain each maximum difference between measurement values at the same point at lower, middle and upper steps.
Take the maximum difference value among all the 9 points as the parallelism during table elevating.

[Sample calculation of parallelism during table elevating]

Measuring point	Measurement value (μm)			
	Lower	Middle	Upper	Maximum difference
A	1	2	1	1
B	2	−1	3	4
C	3	4	5	2
D	4	2	1	3
E	0	0	0	0
F	−1	2	3	4
G	−2	3	3	5
H	−3	2	3	6
I	−4	−2	−4	2

If measurement values are as those indicated in the table, the maximum difference value among all points should be 6μm at the point H.
As a result, the parallelism during elevating of this table is 6μm.

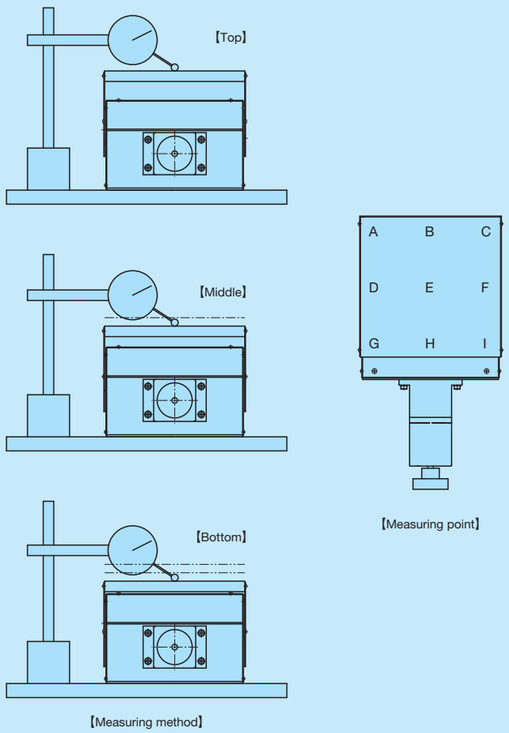

Measurement of squareness during table elevating

The squareness during table elevating relative to a square scale shall be the squareness during table elevating.
At the lower step of the table (H_{min}), align the indicator with 0 relative to a square scale. The maximum difference in pick test deflection at the time when it is stroked from the lower step of the table (H_{min}) to the upper step (H_{max}) in the condition shall be the squareness during table elevating. (Straightness component at the time of table stroke is included.)
Place a square scale at the position 10mm away from the table edge, make a measurement for 2 directions, ball screw axial direction and direction perpendicular to the axis - and take the maximum value between the 2 values as the straightness during table elevating.

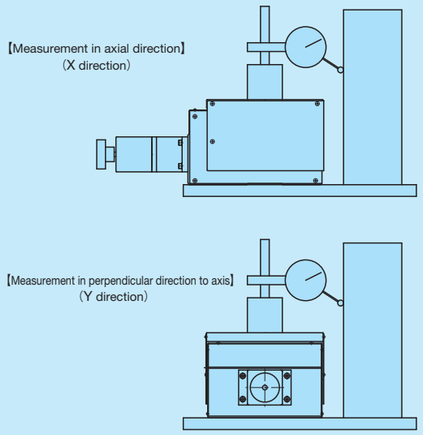

Parallelism of the table to the mounting surface

Using the table mounting surface as a reference, the entire height of the upper surface of the table is measured with an indicator. The maximum reading difference is taken as the measurement value.

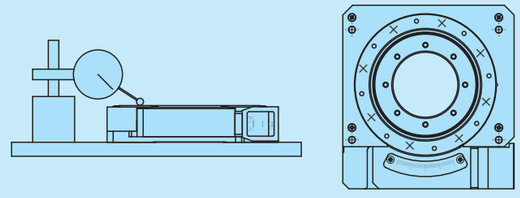

Radial runout of the table diameter

An indicator is placed against the radial surface of the table while the table is rotated a full revolution. The maximum reading difference is taken as the measurement value.

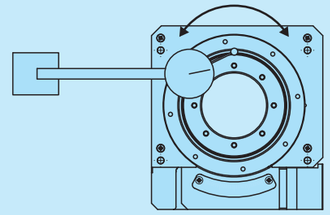

Deflection on the upper surface of the table

An indicator is placed against the upper surface of the table while the table is rotated a full revolution. The maximum reading difference is taken as the measurement value.

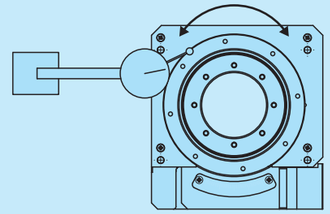

1N=0.102kgf=0.2248lbs.
1mm=0.03937inch

Carrying Mass, Load Mass, Allowable Load

■ Maximum carrying mass

The maximum carrying mass is the mass that satisfies the following ①, ②, and ③. It is set for TE···B, TU, TSL···M, TSLH···M, TX···M, TC···EB, TM, TS/CT, TSLB, AT, AM, and TZ. The value changes by the position of the mass loaded (length L, height H). It is calculated by the formula (L, H) = (0, 0).

① The mass when the total rating life of the linear motion rolling guide, ball screws or bearings is 18,000 hours with continuous operation at the maximum speed for each model and size, and with an acceleration/deceleration time of 0.2s.
② The mass for which the acceleration 0.3G can be acquired in general.
③ The mass calculated based upon the basic static load rating of the linear motion rolling guide you are using.

Note that the value calculated varies depending on various conditions, such as the size, ball screw specifications, slide table length, or stroke length. The value shown at the specifications of each model was calculated based on the most severe conditions that are typical for each size. For detailed values, please contact IKO.

■ Maximum load mass

The maximum load mass refers to the maximum mass of a steel cube that ensures necessary acceleration: acceleration 0.5G for linear motion and acceleration 0.5G in outer circumferential for rotational motion. It is restricted by thrust (torque) characteristics of the motor used, and the larger the carrying mass is, the longer the marginal acceleration time becomes. For linear motor drive models (LT, NT···V, NT···H, NT···XZ and NT···XZH) and direct drive models (SA···DE), the dynamic load mass representing the relation between acceleration and load mass in standard traveling models is set.

■ Allowable load

Allowable load refers to the maximum static load that can be applied without affecting functions or performance when used horizontally. It is set for SK···W.

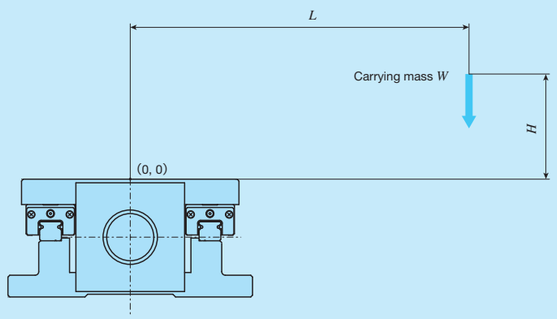

Fig. 1 Carrying mass position

Maximum Speed and Resolution

■ Maximum speed

The maximum speed of a precision positioning table is defined by the following equation.
The ball screw drive type is restricted by the allowable number of ball screw revolutions, which vary by the stroke length. For the timing belt drive, it is calculated with the maximum number of motor revolutions of 900 (min^{-1}) . See the specifications of each model for details.
Each linear motor drive model has a fixed maximum speed. See the specifications of each model for more details.

Ball screw drive

$$\text{Maximum speed (mm/s)} = \text{Ball screw lead (mm)} \times \frac{\text{Allowable number of revolutions of ball screw } (min^{-1})}{60}$$

Timing belt drive

$$\text{Maximum speed (mm/s)} = \text{Pulley pitch diameter} \times \pi \text{ (mm)} \times \frac{\text{Maximum number of revolutions of the motor } (min^{-1})}{60}$$

(Pulley pitch diameter × π = 100mm)

To obtain the actual positioning time, the operation pattern must be considered based on conditions such as acceleration/deceleration time, and stroke length. See the section on consideration of operation patterns.

Maximum Speed and Resolution

■ Resolution

Resolution refers to the minimum feed rate allowed for precision positioning tables and can be obtained by the following equation. Each linear motor drive model has a fixed resolution. See the specifications of each model for more details.

Ball screw drive

$$\text{Resolution (mm/pulse)} = \frac{\text{Ball screw lead (mm)}}{\text{Number of fraction sizes per motor rotation (pulse)}}$$

Timing belt drive

$$\text{Resolution (mm/pulse)} = \frac{\text{Pulley pitch diameter} \times \pi \text{ (mm)}}{\text{Number of fraction sizes per motor rotation (pulse)}}$$

(Pulley pitch diameter × π = 100mm)

Consideration of Operation Patterns

■ Calculation of positioning time

The positioning time taken when the precision positioning table actually moves can be obtained by the following equation. For applications requiring high precision positioning, the settling time from completion of command pulse input to full stop of the table at the positioning point and vibration damping time of the machine device must be considered in addition to the constant speed traveling time and acceleration / deceleration time.

Long-distance positioning

Long distance in this context refers to the distance for which there is enough constant speed traveling time when taking into account the acceleration / deceleration time.

$$t = \frac{L_1}{V_1} + \frac{t_a + t_b}{2} + t_d$$

where t : Positioning time s
t_a, t_b : Acceleration/deceleration time s
t_c : Constant speed traveling time s
t_d : Settling time s
L_1 : Traveling distance mm
V_1 : Traveling speed (set speed) mm/s

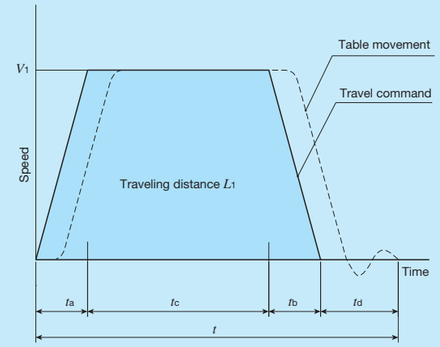

Short-distance positioning

Short distance in this context refers to the distance for which there is no constant speed traveling time because deceleration occurs before reaching constant speed.

$$t = \frac{L_2}{V_2} + \frac{t_a + t_b}{2} + t_d$$

where t : Positioning time s
t_a, t_b : Acceleration/deceleration time s
t_d : Settling time s
L_2 : Traveling distance mm
V_1 : Set speed mm/s
V_2 : Traveling speed mm/s

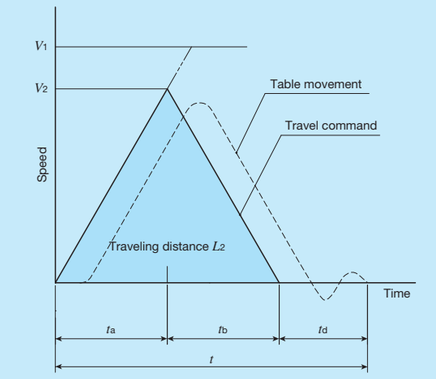

1N=0.102kgf=0.2248lbs.
1mm=0.03937inch

■ Calculation of marginal acceleration time

Torque (thrust force) required for driving of precision positioning table comes to the highest during acceleration. Torque (thrust force) required for this acceleration is limited by motor output torque (linear motor thrust force). Therefore, the marginal acceleration time with table used horizontally is calculated by the following equation.

For ball screw drive and timing belt drive

● Applied torque T_L

$T_L = T_0 + \mu W g \cdot \frac{\ell}{2\pi\eta}$ [N·m] ……Ball screw drive

$T_L = T_0 + (Wg \times \text{Wedge reduction ratio}) \cdot \frac{\ell}{2\pi\eta}$ [N·m] …Applicable to TZ

$T_L = T_0 + \mu W g \cdot \frac{r}{\eta}$ [N·m] ……Timing belt drive

● Acceleration torque T_a

$T_a = (J_T + J_M + J_C + J_L) \cdot \frac{2\pi N}{60 t_a}$ [N·m]

$J_L = W \cdot \left(\frac{\ell}{2\pi}\right)^2$ [kg·m²] ……Ball screw drive

$J_L = W \cdot \left(\frac{\ell}{2\pi}\right)^2 \times \text{Wedge reduction ratio}^2$ [kg·m²] ……Applicable to TZ

$J_L = W \cdot r^2$ [kg·m²] ……Timing belt drive

● Torque required for acceleration T_P

$T_P = T_L + T_a$ [N·m] $(T_P \times k < T_M)$

● Marginal acceleration time t_a

$t_a = (J_T + J_M + J_C + J_L) \cdot \frac{2\pi N}{60} \cdot \frac{k}{T_M - T_L}$ [s]

[In case of AT]

● Applied torque T_L

$T_L = T_0 + \mu W g \cdot \frac{\ell}{2\pi\eta}$

● Carrying mass inertia J_L

$J_L = W \cdot \left(\frac{\ell \cdot R_0}{2\pi L}\right)^2$

● Distance to rotator L

Model	ℓ [m]	L [m]
AT120A	0.001	0.100
AT200A	0.001	0.130
AT300A	0.002	0.186

T_0 : Starting torque N·m
μ : Friction coefficient of rolling guide (0.01)
W : Carrying mass kg
ℓ : Ball screw lead m
r : Pulley pitch radius (0.0159m)
η : Efficiency 0.9
J_T : Table inertia kg·m²
J_M : Motor inertia kg·m²
J_C : Coupling inertia
J_L : Carrying mass inertia kg·m²
N : Number of revolutions of motor min⁻¹
t_a : Acceleration time s
g : Gravity acceleration (9.8m/s²)
T_M : Motor output torque N·m
・For the stepper motor, it is the output torque at the number of motor revolutions N.
・For the AC servomotor, it is the maximum (momentary) torque at the number of revolutions N.
k : Factor of safety
(AC servomotor : 1.3)
(stepper motor : 1.5~2)
Wedge reduction ratio: 0.5 in case of 1 : 2
: 0.25 in case of 1 : 4
R_0 : Distance from the center of the table to the center of gravity of the load m
L : Distance from the center of the table to the rotator m

In case of linear motor drive

● Force from acceleration F_a

$F_a = (W_L + W_T) \cdot \frac{V}{t_a}$ [N]

● Thrust force required for acceleration F_P

$F_P = F_a + F_L$ [N]

● Marginal acceleration time t_a

$t_a = \frac{(W_L + W_T) \cdot V \cdot k}{F_M - F_L}$ [s]

μ : Friction coefficient of rolling guide (0.01)
W_T: Mass of moving table kg
W_L: Carrying mass kg
F_R : Running resistance N
(LT170H: 40N)
F_c : Cord pull-resistance(1) N
(LT Series: About 1.0N)
(NT Series: None)
F_M: Linear motor thrust force N
(maximum thrust at traveling speed V)
t_a : Acceleration time s
V : Traveling speed m/s
g : Gravity acceleration 9.8 m/s²
k : Factor of safety (1.3)

Note (1) Cord pull-resistance varies depending on cord mass and how to pull it. Use the an expected resistance value for calculation.

[In case of LT···CE, LT···LD]

● Friction resistance of rolling guide F_f
$F_f = \mu\ (W_L + W_T)\ g$ [N]
However, minimum value of F_f shall be as follows.
For LT100CE: 2.5N
For LT150CE: 5.0N
For LT130LD: 6.0N
For LT170LD: 6.0N

● Force from running resistance F_L
$F_L = F_f + F_c$ [N]

[In case of LT···H]

● Running resistance F_R
LT170H: 40N

● Speed coefficient f_V

Traveling speed V[m/s]	LT170H
0.5 or less	1
Above 0.5 and below 1.0	1.5
Above 1.0 and below 1.5	2.25

● Force from running resistance F_L
$F_L = f_V \cdot F_R + F_c$ [N]

[In case of NT38V]

● Force from running resistance F_L
F_L = 0.25N

[In case of NT55V/NT80V]

● Force from running resistance F_L
F_L = 1.5N

[In case of NT80XZ]

● Force from running resistance F_L
Horizontal axis: F_L = 1.5N
Vertical axis: F_L = 0.5N (2)

[In case of NT90XZH]

● Force from running resistance F_L
Horizontal axis: F_L = 2.0N
Vertical axis: F_L = 2.0N (2)

[In case of NT88H]

● Force from running resistance F_L
F_L = 0.5N

Note (2) It is the resistance value for the stroke of ±5mm from the equilibrium point in the center area of the stroke range, assuming the spring system balance mechanism of the vertical axis.
The value changes depending on the spring mounting position or the stroke width in the actual calculation. Please verify using the actual machine.

1N=0.102kgf=0.2248lbs.
1mm=0.03937inch

Consideration of Operation Patterns

In case of direct drive (SA···DE)

[In case of SA···DE/X(Y)]

● Friction resistance of rolling guide F_f

F_f value shall be as follows.

In case of SA65DE/X 0.5N

In case of SA120DE/X 3.0N

● Force from running resistance F_L

$F_L = F_f + F_c$ [N]

● Force from acceleration F_a

$$F_a = (W_L + W_T) \cdot \frac{V}{t_a} \text{ [N]}$$

● Thrust force required for acceleration F_P

$F_P = F_a + F_L$ [N]

● Marginal acceleration time t_a

$$t_a = \frac{(W_L + W_T) \cdot V \cdot k}{F_M - F_L} \text{ [s]}$$

[In case of SA···DE/S]

● Friction resistance of rolling guide M_f

M_f value shall be as follows.

In case of SA65DE/S 0.03N·m

In case of SA120DE/S 0.1N·m

In case of SA200DE/S 0.2N·m

● Torque from rotation resistance M_L

$M_L = M_f + M_c$ [N·m]

● Torque from acceleration M_a

$$M_a = (J_L + J_T) \cdot \frac{R}{t_a} \text{ [N·m]}$$

● Torque required for acceleration M_P

$M_P = M_a + M_L$ [N·m]

● Marginal acceleration time t_a

$$t_a = \frac{(J_L + J_T) \cdot R \cdot k}{M_M - M_L} \text{ [s]}$$

W_T: Mass of moving table kg
W_L: Carrying mass kg
F_c : Cord pull-resistance(1) N
F_M: Linear motor thrust force N
(maximum thrust at traveling speed V)
t_a : Acceleration time s
V : Traveling speed m/s
k : Factor of safety (1.3)

Note (1) Cord pull-resistance varies depending on cord mass and how to pull it. Use the an expected resistance value for calculation.

J_L : Inertia moment of load kg·m²
J_T : Inertia moment of moving table kg·m²
M_c : Cord pull-resistance(2) N·m
M_M: Alignment stage torque N·m
t_a : Acceleration time s
R : Traveling speed rad/s
k : Factor of safety (1.3)

Note (2) As there is no cord for θ-axis moving table, set the cord pull-resistance to 0 if the load does not pull cord.
Calculate the inertia moment of load by referencing calculation formulas below.

Calculation of inertia moment

p: density, m: mass

Cylinder	Quadrangular prism	Offset rotation
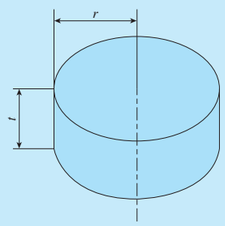	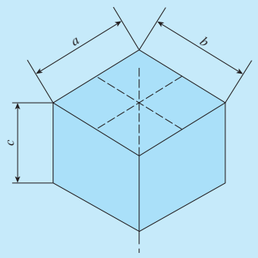	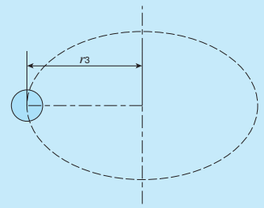
$J_L = \frac{1}{2} \cdot \pi \cdot p \cdot t \cdot r^4 = \frac{1}{2} \cdot m \cdot r^2$	$J_L = \frac{1}{12} \cdot p \cdot a \cdot b \cdot c \cdot (a^2 + b^2) = \frac{1}{12} \cdot m \cdot (a^2 + b^2)$	$J_L' = J_L + m \cdot r_3^2$ J_L': Inertia moment from rotation center J_L : Inertia moment when rotating around the center of gravity

■ Calculation of effective torque and effective thrust force

As a large torque (thrust force) is required for acceleration / deceleration when the precision positioning table is driven, the effective torque (effective thrust force) may become larger than the motor's rated torque (rated thrust) depending on the operation rate of each pattern in case the AC servomotor or linear motor drive is used. Continuing the operation in this condition may cause overheating and seizure of the motor. So ensure that the effective torque (effective thrust force) is smaller than motor's rated torque (rated thrust). The effective torque (effective thrust force) by the operation pattern of table is calculated by the following equation.
If the rated torque (rated thrust) of the motor is larger than the effective torque (effective thrust force), continuous operation according to the operation pattern is possible.

If AC servomotor is used

● Effective torque T_{rms}

$$T_{rms} = \sqrt{\frac{T_P^2 \times t_a + (T_P - 2 \times T_L)^2 \times t_a + T_L^2 \times t_c}{t}} \text{ [N·m]}$$

In case of linear motor drive

● Effective thrust force F_{rms}

$$F_{rms} = \sqrt{\frac{F_P^2 \times t_a + (F_P - 2 \times F_L)^2 \times t_a + F_L^2 \times t_c}{t}} \text{ [N]}$$

In case of direct drive (SA···DE)

● Effective thrust force (applicable to SA···DE/X(Y)) F_{rms}

$$F_{rms} = \sqrt{\frac{F_P^2 \times t_a + (F_P - 2 \times F_L)^2 \times t_a + F_L^2 \times t_c}{t}} \text{ [N]}$$

● Effective torque (applicable to SA···DE/S) M_{rms}

$$M_{rms} = \sqrt{\frac{M_P^2 \times t_a + (M_P - 2 \times M_L)^2 \times t_a + M_L^2 \times t_c}{t}} \text{ [N·m]}$$

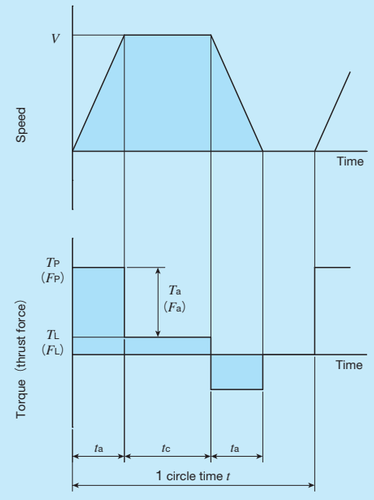

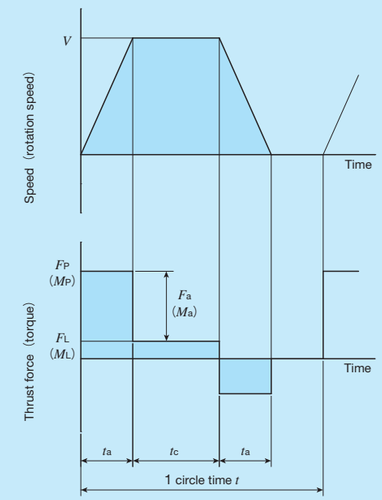

1N=0.102kgf=0.2248lbs.
1mm=0.03937inch

■ Consideration example of operation pattern

If AC servomotor is used

● Usage conditions

Mounting direction		Horizontal usage
Carrying mass	W	30kg
Stroke length	L	300mm
Traveling speed (set speed)	V	300mm/s
Acceleration/deceleration time	t_a	0.2s
Constant speed traveling time	t_c	0.8s
1 cycle time	t	2.0s

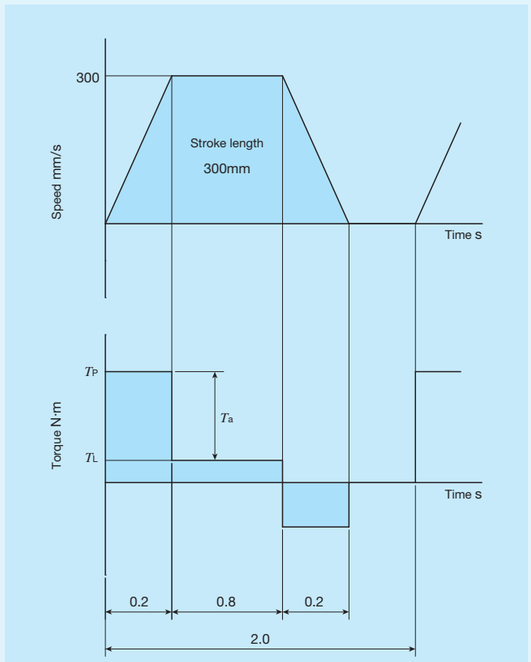

● Temporary selection of positioning table
Temporarily select TU60S49/AT103G10S03.

Basic specification

Ball screw lead	ℓ	10mm
Stroke length		300mm
Maximum speed		500mm/s
Starting torque	T_S	0.08N·m
Table inertia	J_T	0.93×10^{-5}kg·m²
Coupling inertia	J_C	0.290×10^{-5}kg·m²

● Motor specification

AC servomotor used		SGMAV-01A
Rated torque		0.318N·m
Motor inertia	J_M	0.380×10^{-5}kg·m²

● Calculation of torque required for acceleration

・Applied torque T_L

$$T_L=T_S+\mu Wg\cdot\frac{\ell}{2\pi\eta}$$
$$=0.08+0.01\times30\times9.8\times\frac{0.01}{2\times\pi\times0.9}$$
$$\fallingdotseq0.09\text{N·m}$$

・Acceleration torque T_a

$$J_L=W\cdot\left(\frac{\ell}{2\pi}\right)^2$$
$$=30\times\left(\frac{0.01}{2\times\pi}\right)^2\fallingdotseq7.60\times10^{-5}\text{kg·m}^2$$
$$N=V\times\frac{60}{\ell}=0.3\times\frac{60}{0.01}=1800\text{min}^{-1}$$
$$T_a=(J_T+J_M+J_C+J_L)\cdot\frac{2\pi N}{60t_a}$$
$$=(0.93+0.380+0.290+7.60)\times10^{-5}\times\frac{2\times\pi\times1800}{60\times0.2}$$
$$\fallingdotseq0.09\text{N·m}$$

・Torque required for acceleration T_P

$$T_P=T_L+T_a=0.09+0.09=0.18\text{N·m}$$

At this point, check that the $T_P\times k$ (factor of safety) is smaller than motor's output torque T_M.
If this value is exceeded, review the maximum speed and acceleration / deceleration time.
For the operation pattern under consideration, it is smaller than the output torque T_M as indicated below.

$$T_M=0.318\times3\fallingdotseq0.95\text{N·m}$$
$$T_P\times k=0.18\times1.3=0.23\text{N·m}<T_M$$

● Consideration of effective torque
・Effective torque T_{rms}

$$T_{rms}=\sqrt{\frac{T_P^2\times t_a+(T_P-2\times T_L)^2\times t_a+T_L^2\times t_c}{t}}$$
$$=\sqrt{\frac{0.23^2\times0.2+(0.23-2\times0.09)^2\times0.2+0.09^2\times0.8}{2.0}}$$
$$\fallingdotseq0.09\text{N·m}$$

As motor's rated torque is larger than the effective torque T_{rms}, it can be judged that continuous operation in the operation pattern under consideration is possible.

In case of linear motor drive

The effective thrust force may exceed the rated thrust depending on the operation rate of Linear Motor Table, leading to motor overheating and seizure that may cause breakage and human injury. Before operations, ensure that the effective thrust force is below the rated thrust.
Described below is an example of consideration of operation pattern with LT170HS. Temporarily set the operation pattern as indicated below considering the carrying mass and acceleration from the dynamic load mass chart in page Ⅱ-294.

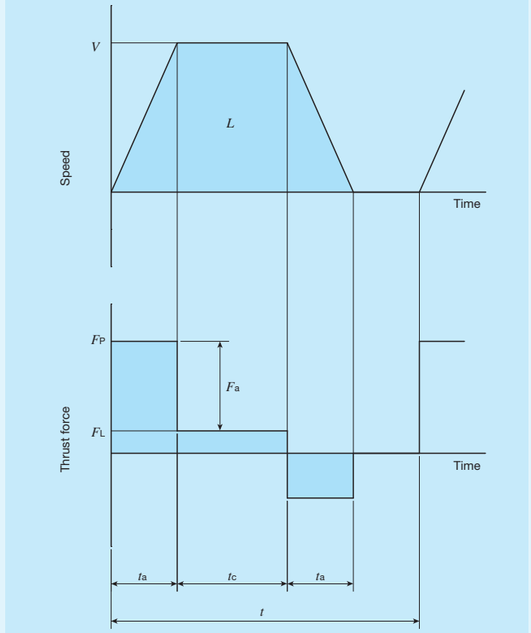

Setting items

Table specification	Model		LT170HS (natural air cooling)
	Mass of moving table	W_T	4.0kg See page Ⅱ-306
	Maximum thrust at traveling speed V	F_M	About 550N See page Ⅱ-294
	Running resistance	F_R	See [In case of LT⋯H] in the section of calculation of marginal acceleration time.
	Speed coefficient	f_V	
Carrying mass		W_L	30kg
Traveling distance		L	1.2m
Traveling speed (set speed)		V	1.5m/s
Time		t_a	0.3s
		t_c	0.5s
		t	2.5s
Cord pull-resistance		F_C	1.0N Expected value
Factor of safety		k	1.3
Ambient temperature			30℃

STEP1 Calculation of thrust force required for acceleration

①Force from running resistance F_L

$$F_L=f_V\times F_R+F_C=2.25\times40+1=91\text{N}$$

②Force from acceleration F_a

$$F_a=(WL+WT)\cdot\frac{V}{t_a}$$
$$=(30+4.0)\times\frac{1.5}{0.3}=170\text{N}$$

③Thrust force required for acceleration F_P

$$F_P=F_a+F_L$$
$$=170+91=261\text{N}$$

At this point, check that the $F_P\times k$ (factor of safety) is below the thrust characteristics curve in page Ⅱ-294. If this value is exceeded, review the maximum speed for operating pattern and acceleration / deceleration time.
You can see in the example pattern that it is below the thrust characteristics curve.
Maximum thrust F_M at 1.5m/s=About 550N

$$F_P\times k=261\times1.3=339.3\text{N}<F_M$$

STEP2 Consideration of effective thrust force

・Effective thrust force F_{rms} can be obtained as follows.

$$F_{rms}=\sqrt{\frac{F_P^2\times t_a+(F_P-2\times F_L)^2\times t_a+F_L^2\times t_c}{t}}$$
$$=\sqrt{\frac{261^2\times0.3+(261-2\times91)^2\times0.3+91^2\times0.5}{2.5}}$$
$$\fallingdotseq103\text{N}$$

At this point, check that F_{rms} is below the rated thrust. If the rated thrust is exceeded, review the maximum speed for operating pattern and acceleration / deceleration time. (For LT⋯H, thrust characteristics vary depending on ambient temperature. See the rated thrust characteristics diagram.)

For the example pattern, the rated thrust is about 117N at the ambient temperature of 30℃, so the value is 103N< 117N (rated thrust) and it can be judged that continuous operation is possible.

1N=0.102kgf=0.2248lbs.
1mm=0.03937inch

Consideration of Operation Patterns

In case of Alignment Stage SA

The effective thrust force may exceed the rated thrust (or the effective torque exceeds the rated torque) depending on the operation rate of Alignment Stage SA, leading to motor overheating and seizure that may cause breakage and human injury. Before operations, ensure that the effective thrust force is below the rated thrust (or the effective torque is below the rated torque).
Described below is an example of consideration of operation pattern with Alignment Stage SA120DE/XYS.
Temporarily set an operation pattern as indicated below considering the marginal acceleration time.

Setting items

Table model			SA120DE/XYS
Load mass		W_L	5.0kg
Inertia moment of load		J_L	1.0×10^{-2}kg·m²
X-axis operation pattern	Mass of moving table	W_T	5.9kg
	Set stroke	L	0.01m
	Maximum speed	V	0.1m/s
	Acceleration/deceleration time	t_a	0.05s
	Constant speed traveling time	t_c	0.05s
	Cycle time	t	0.4s
	Cord pull-resistance	F_c	1.0N
Y-axis operation pattern	Mass of moving table	W_T	3.4kg
	Set stroke	L	0.01m
	Maximum speed	V	0.1m/s
	Acceleration / deceleration time	t_a	0.05s
	Constant speed traveling time	t_c	0.05s
	Cycle time	t	0.4s
	Cord pull-resistance	F_c	1.0N
θ-axis operation pattern	Inertia moment of moving table	J_T	2.0×10^{-3}kg·m²
	Set operating angle	L	0.1πrad 18°
	Maximum speed	R	πrad/s 180°/s
	Acceleration/deceleration time	t_a	0.05s
	Constant speed traveling time	t_c	0.05s
	Cycle time	t	0.4s
	Cord pull-resistance	M_c	0.0N·m
Factor of safety		k	1.3

STEP1 Calculation of thrust force required for X-axis acceleration

①Force from running resistance F_L

$F_L=F_f+F_c=3.0+1.0=4.0$N

②Force from acceleration F_a

$$F_a=(W_L+W_T)\cdot\frac{V}{t_a}$$
$$=(5.0+5.9)\times\frac{0.1}{0.05}=21.8\text{N}$$

③Thrust force required for acceleration F_P

$F_P=F_a+F_L$
$=21.8+4.0=25.8$N

At this point, check that the $F_P\times k$ (factor of safety) is below the maximum thrust in page Ⅱ-270. If this value is exceeded, review the maximum speed for operating pattern and acceleration / deceleration time.
You can see in the example pattern that it is below the maximum thrust.
The maximum thrust F_M of SA120DE/X=70N
$F_P\times k=25.8\times1.3=33.54\text{N}<F_M$

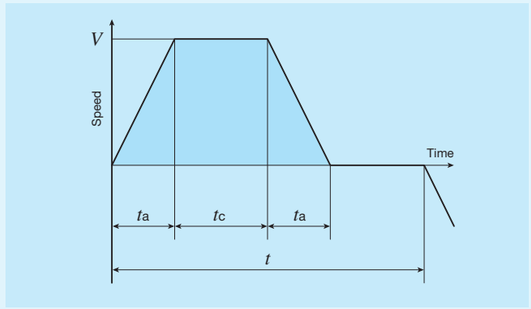

STEP2 Consideration of effective thrust force

・Effective thrust force F_{rms} can be obtained as follows.

$$F_{rms}=\sqrt{\frac{F_P^2\times t_a+(F_P-2\times F_L)^2\times t_a+F_L^2\times t_c}{t}}$$
$$=\sqrt{\frac{25.8^2\times0.05+(25.8-2\times4.0)^2\times0.05+4.0^2\times0.05}{0.4}}$$
$$\fallingdotseq11.17\text{N}$$

At this point, check that F_{rms} is below the rated thrust. If the rated thrust is exceeded, review the maximum speed for operating pattern and acceleration / deceleration time. In the example pattern, it can be judged that continuous operation is possible.

STEP3 Consideration of thrust force and effective thrust force required for Y-axis acceleration

Perform the same calculation as X-axis.
If the operation pattern is the same, the condition is lighter for Y-axis as its mass of moving table is smaller. So that is omitted in this example.

STEP4 Consideration of torque required for θ-axis acceleration

①Torque from rotation resistance M_L

$M_L=M_f+M_c$
$=0.1+0.0=0.1$N·m

②Torque from acceleration M_a

$$M_a=(J_L+J_T)\cdot\frac{R}{t_a}$$
$$=(0.01+0.002)\times\frac{\pi}{0.05}\fallingdotseq0.754\text{N}\cdot\text{m}$$

③Torque required for acceleration M_P

$M_P=M_a+M_L$
$=0.754+0.1=0.854$N·m

At this point, check that the $M_P\times k$ (factor of safety) is below the maximum torque in page Ⅱ-270. If this value is exceeded, review the maximum speed for operating pattern and acceleration / deceleration time. You can see in the example pattern that it is below the maximum torque.

Maximum torque M_M of SA120DE/S=2.0N·m
$M_P\times k=0.854\times1.3\fallingdotseq1.11\text{N}\cdot\text{m}<M_M$

STEP5 Consideration of effective torque

・Effective torque M_{rms} can be obtained as follows.

$$M_{rms}=\sqrt{\frac{M_P^2\times t_a+(M_P-2\times M_L)^2\times t_a+M_L^2\times t_c}{t}}$$
$$=\sqrt{\frac{0.854^2\times0.05+(0.854-2\times0.1)^2\times0.05+0.1^2\times0.05}{0.4}}$$
$$\fallingdotseq0.38\text{N}\cdot\text{m}$$

At this point, check that M_{rms} is below the rated torque. If the rated torque is exceeded, review the maximum speed for operating pattern and acceleration / deceleration time. In the example pattern, it can be judged that continuous operation is possible.

※Caution If the load is offset from the rotation center, X- and Y-axis acceleration / deceleration generates torque load on the θ-axis. So extra care must be exercised.

1N=0.102kgf=0.2248lbs.
1mm=0.03937inch

Sensor Specification

Precision positioning table is equipped with CW and CCW limit sensors for overrun prevention and pre-origin, origin and for origin sensors for machine origin detection. For some table models, these sensors are provided as standard equipment, and for the other models, mounting is specified by identification numbers.
Types of sensors used for Precision positioning table are listed in Table 1 and specifications of each sensor in Table 2 to 4.
For connector specifications for NT···V, SA200DE/S, LT and TM, see Table 5.1 to 5.2. For other tables, wires are unbound, so that the sensor output connector and mating-side must be prepared separately by customer.
For sensor timing chart, please see section of sensor specifications of each model. In addition, unless otherwise stated, sensor positions can be fine-adjusted. Please make adjustment on your own.

Table 1 Sensor types

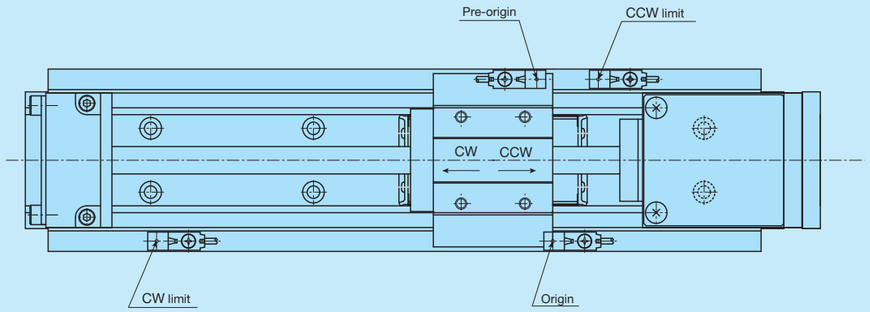

A mark tube with engraved signal name (ORG, PORG, CW or CCW) is inserted into the unbound-wire specification sheath.

Table model \ Sensor		CW limit	CCW limit	Pre-origin (PORG)	Origin (ORG)	For origin (PORG)
TE···B(1)		Proximity sensor	Proximity sensor	Proximity sensor	Proximity sensor	–
TU(1)		Proximity sensor	Proximity sensor	Proximity sensor	Proximity sensor	–
TSL···M		Proximity sensor	Proximity sensor	Proximity sensor	Photo sensor ④(2)	–
TSLH···M・CTLH···M		Photo sensor ③	Photo sensor ③	Photo sensor ③	Photo sensor ④(2)	–
TX···M・CTX···M		Photo sensor ③	Photo sensor ③	Photo sensor ③	Photo sensor ④(2)	–
TC···EB(1)		Proximity sensor	Proximity sensor	Proximity sensor	Proximity sensor	–
TM(1)(4)		Magnetic sensor(5)	Magnetic sensor(5)	Magnetic sensor(5)	Magnetic sensor(5)	–
TS/CT(1)	TS55/55・CT55/55	Micro switch(6)	Micro switch(6)	Proximity sensor	Photo sensor ③	–
	TS75/75	Photo sensor ①	Photo sensor ①	Photo sensor ①	Photo sensor ①	–
	CT75/75	Photo sensor ③	Photo sensor ③	Photo sensor ③(5)	Photo sensor ③(5)	–
	Other than listed above	Photo sensor ③	Photo sensor ③	Photo sensor ③	Photo sensor ②(2)	–
TSLB		Proximity sensor	Proximity sensor	Proximity sensor	Proximity sensor	–
LT···CE(1)		Proximity sensor(3)	Proximity sensor(3)	Proximity sensor(3)	Encoder(3)(5)	–
LT···LD		Proximity sensor(3)(5)	Proximity sensor(3)(5)	Proximity sensor(3)(5)	Encoder(3)(5)	–
LT···H		Proximity sensor(3)(5)	Proximity sensor(3)(5)	Proximity sensor(3)(5)	Encoder(3)(5)	–
NT···V(1)		Proximity sensor	Proximity sensor	Proximity sensor	Encoder(3)(5)	–
NT···H		Encoder(3)(5)	Encoder(3)(5)	–	Encoder(3)(5)	–
AT		Proximity sensor(5)	Proximity sensor(5)	–	–	–
SK···W		Proximity sensor	Proximity sensor	–	–	Proximity sensor
AM		Proximity sensor	Proximity sensor	Proximity sensor	–(2)	–
SA···DE	SA200DE/S	Proximity sensor(5)	Proximity sensor(5)	Proximity sensor(5)	Encoder(3)(5)	–
	Other than listed above	Magnetic sensor(5)(6)	Magnetic sensor(5)(6)	Magnetic sensor(5)(6)	Encoder(3)(5)(6)	–
TZ		Proximity sensor(5)	Proximity sensor(5)	Proximity sensor(5)	Proximity sensor(2)(5)	–

Notes (1) Mounting a sensor is specified using the corresponding identification number. For the other models, sensors are equipped as standard equipment.
(2) No origin sensor is provided if an attachment for AC servomotor or linear encoder is selected. Use C phase or Z phase signal of AC servomotor or linear encoder to be installed on your own. For AM, only AC servomotor is selected.
(3) Each signal is output from applicable dedicated programmable control unit or dedicated driver.
(4) Sensors are built in the table and each signal is output from a dedicated sensor amplifier. When the AC servomotor is used, use encoder's C phase for origin signals.
(5) Sensor (encoder) positions cannot be fine-adjusted.
(6) This is built in the substrate.

Table 2 Photo sensor specifications

Item \ Sensor	Limit, pre-origin and origin			
	① PM-L25	② PM-K65	③ PM-T65	④ PM-L65
Manufacturer	Panasonic Industrial Devices SUNX Co., Ltd.			
Shape (mm)	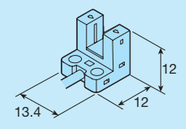	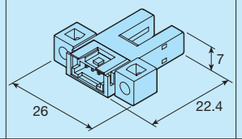	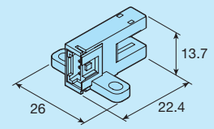	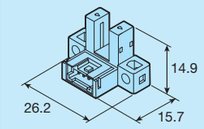
Output connector models (1)	–	CN-14A-C1 (lead length: 1 m) or CN-14A-C3 (lead length: 3 m)		
Power supply voltage	DC5～24V ±10%			
Current consumption	15mA or less			
Output	NPN transistor open collector ・Maximum input current : 50mA ・Applied voltage : 30VDC or less ・Residual voltage : 2V or less at input current of 50mA 1V or less at 16mA			
Output operation	ON/OFF upon light entrance; selective (2)			
Operation indication	Orange LED (ON upon light entrance)			
Circuit diagram	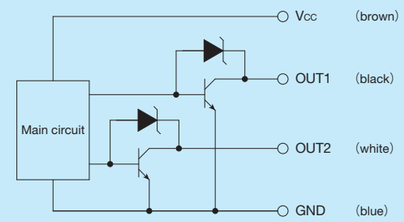			

Notes (1) Selected according to the applicable models.
(2) For CT75/75, use OUT1 (black) for CW limit and CCW limit and OUT2 (white) for pre-origin and origin. For the other models, use OUT1 (black) for all.
Remarks 1. Wire the sensor cords on your own.
2. Lead runs off by at least 200mm from the table end. Actual length varies depending on stroke length.

1N=0.102kgf=0.2248lbs.
1mm=0.03937inch

Table 3 Specifications of proximity sensor

Item \ Target model		SA200DE/S	TZ200H and TZ200X	Other models	SK···W	TZ120X
Manufacturer		Azbil Corporation			OMRON Corporation	
Model(1)	Pre-origin	APM-D3A1F-S	APM-D3B1F-S	APM-D3B1-S APM-D3B1F-S	–	E2S-W14 1M
	CW limit	APM-D3A1-S	APM-D3B1-S	APM-D3B1-S	E2S−W14 1M	E2S-W14 1M
	CCW limit		APM-D3B1F-S		E2S−W14 1M	E2S-W14 1M
	Origin	Encoder	APM-D3A1-S	APM-D3A1-S	–	E2S-W13B 1M
	For origin	–	–	–	E2S−W13B 1M	–
Shape mm		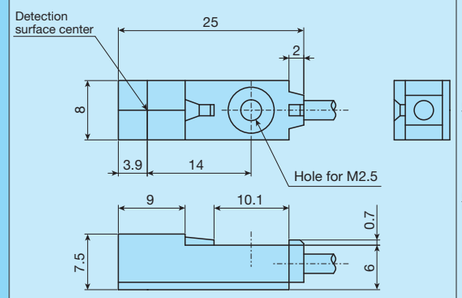			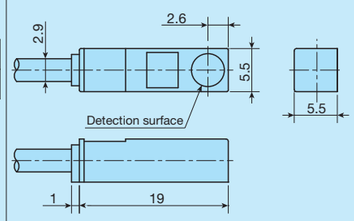	
Power supply voltage		DC12～24V ±10%				
Current consumption		10mA or less			13mA or less	
Output		NPN open collector · Maximum input current: 30mA or less (resistance load) · Applied voltage : DC26.4V or less · Residual voltage : 1V or less at input current of 30mA			NPN open collector · Maximum input current: 50mA · Applied voltage : DC30V or less · Residual voltage : 1V or less at input current of 50mA	
Output operation	Pre-origin	ON in proximity	OFF in proximity			
	Limit	ON in proximity	OFF in proximity			
	Origin/For origin	Encoder	ON in proximity			
Operation indication	Pre-origin	Orange LED (ON upon detection)	Orange LED (OFF upon detection)			
	Limit	Orange LED (ON upon detection)	Orange LED (OFF upon detection)			
	Origin/For origin	—	Orange LED (ON upon detection)			
Circuit diagram		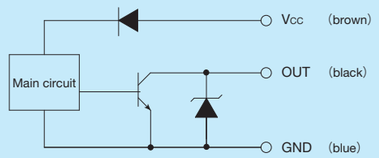				

Remarks: 1. Wire the sensor cords on your own (except for NT···V/SC).
2. Lead runs off by at least 200mm from the table end. Actual length varies depending on stroke length.
3. For information about PNP sensor options, please contact IKO.

Note (1) Model numbers apply to manufacturer standard products. Depending on the total length of the product, the cable length may be a different from that of standard products.

Table 4 Specifications of magnetic sensor

Item \ Sensor		TM	SA65DE, SA120DE
Power supply voltage		DC12 to 24V ±10%	DC5 to 24V ±10%
Current consumption		65mA or less(1)	10mA or less
Output(2)		NPN open collector · Maximum input current: 12mA · Applied voltage : DC36V or less · Residual voltage: 1.7V or less at input current of 12mA : 1.1V or less at input current of 4mA	NPN open collector · Maximum input current: 10mA · Applied voltage: DC26.4V or less · Residual voltage: 1V or less at input current of 10mA
Output operation	Pre-origin	OFF in proximity	ON in proximity
	Limit	OFF in proximity	ON in proximity
	Origin	ON in proximity	Encoder
Operation indication	Pre-origin	Red LED (ON upon detection)	—
	CW (+) limit	Yellow LED (ON upon detection)	—
	CCW (-) limit	Red LED (ON upon detection)	—
	Origin	Red LED (ON upon detection)	—
Circuit diagram		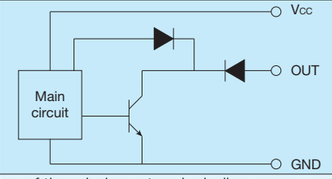	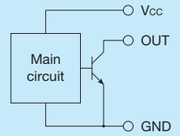

Notes (1) Current consumption of the whole system including sensor amplifier.
(2) Output per circuit.

Table 5.1 Connector specifications (NT55V/SC, NT80V/SC, SA200DE/S and LT)

Pin No.	Signal name	Connector used (Product of Molex Japan)	
		Body side	Mating side
1	Pre-origin(1)	Housing 1625-12R1 Terminal 1855TL	Housing 1625-12P1 Terminal 1854TL
2	Pre-origin		
3	+direction limit		
4	−direction limit		
5	Power input (for pre-origin)(1)		
6	GND (for pre-origin)(1)		
7	Power input (for pre-origin)		
8	GND (for pre-origin)		
9	Power input (for +direction limit)		
10	GND (for +direction limit)		
11	Power input (for −direction limit)		
12	GND (for −direction limit)		

Note (1) For B-table of LT/T2.

Table 5.2 Connector specifications (for TM)

Pin No.	Signal name	Connector used (Product of Molex Japan)	
		Body side	Mating side
1	Origin	Housing 43020-0600 Terminal 43031-0010	Housing 43025-0600 Terminal 43030-0007
2	Pre-origin		
3	CW limit		
4	CCW limit		
5	Power input		
6	GND		

Remark: When the AC Servomotor is used, use encoder's C phase for origin signals.

1N=0.102kgf=0.2248lbs.
1mm=0.03937inch

Mounting

■ Processing accuracy of mounting surface

Accuracy and performance of Precision positioning table are affected by accuracy of mating mounting surface. Therefore, processing accuracy of the mounting surface must be considered according to usage conditions such as required motion performance and positioning accuracy.
Reference flatness of the mating mounting surface under general usage conditions is indicated in Table 6.
In addition, the base on which a table is mounted receives a large reactive force, so take enough care about the rigidity of the base.

Table 6 Accuracy of mounting surface unit: μm

Model	Flatness of the mounting surface
NT···H	5
TX TM	8
TS/CT NT···V NT···XZ NT···XZH SA···DE SK···W	10
TSLH···M	15
TE···B TU TSL···M TC···EB LT AM	30
TSLB	50

■ Tightening torque for fixing screw

Typical tightening torque to fix the Precision positioning table is indicated in Table 7. If sudden acceleration / deceleration occurs frequently or moment is applied, it is recommended to tighten them to 1.3 times higher torque than that indicated in the table. In addition, when high accuracy is required with no vibration and shock, it is recommended to tighten the screws to torque smaller than that indicated in the table and use adhesive agent to prevent looseness of screws.

Table 7 Screw tightening torque unit: N·m

Bolt size	Female thread component		
	Steel	Aluminum alloy	
			Screw insert
M2 ×0.4	0.31	About 60% of steel value	About 80% of steel value
M3 ×0.5	1.7(1)		
M4 ×0.7	4.0		
M5 ×0.8	7.9		
M6 ×1	13.3		
M8 ×1.25	32.0		
M10×1.25	62.7		

Note (1) As tightening torque for NT···V, 1.1N·m is recommended. (When using a steel base)

Precaution for Use

■ Safety precautions

- Be sure to earth the ground terminal (The grounding resistance is 100Ω or less.). It may lead to electric shock and fire.
- Use only the power voltage indicated on the device. Otherwise, it may lead to fire and malfunction.
- Do not touch any electrical component with wet hand. It may lead to electric shock.
- Do not bend forcibly, twist, pull, heat or apply heavy load on the cord. It may lead to electric shock and fire.
- Do not put your finger into any opening during table operations. It may lead to injury.
- Do not touch any moving part during table operations. It may lead to injury.
- When removing the electrical component cover, be sure to turn the power off and disconnect the power plug. It may lead to electric shock.
- Do not touch the terminal for 5 minutes after shutting down the power. Otherwise, electric shock due to residual voltage may occur.
- When installing / removing the connection terminal, be sure to turn the power off and disconnect the power plug in advance.Otherwise, it may lead to electric shock and fire.

■ Precaution for Use

- As precision positioning table is a precision machine, excessive load or shock may impair accuracy and damage the parts. Take extra care when handling it.
- Check that the table mounting surface is free from dust and harmful projection.
- Use it in a clean environment where it is not exposed to water, oil and dust particles.
- As grease is applied to the linear motion rolling guide integrated with precision positioning table and ball screws, take dust protection measures to prevent dust and other foreign matters from entering into the unit. If foreign matters get mixed, thoroughly eliminate the contaminated grease and apply clean grease again.
- Though lubrication frequency for precision positioning table varies depending on usage conditions, wipe off old grease and apply clean grease again biannually for normal cases or every three months for applications with constant reciprocating motions in long distance. In addition, the Precision Positioning Table in which C-Lube is built delivers long-term maintenance free performance. This reduces the need for the lubrication mechanism and workload which used to be necessary for linear motion rolling guides and ball screws, allowing large-scale reduction of maintenance cost.
- As precision positioning table is assembled through precise processing and adjustments, do not disassemble or alter it.
- Linear motor drive products have strong magnets inside. Note that any magnetic object around such product may be attracted. For use around any device vulnerable to magnetism, please contact IKO.
- Linear motor drive products require parameter settings of programmable control unit or driver for driving. Securely configure parameter settings suitable for the drive motor.
- For Linear Motor Table LT series, motor cord, etc. is connected to moving table, so a space for wiring of cord must be ensured in addition to the installation space for the main body. In addition, arrange cord wiring with sufficient curvature so that the running resistance does not increase or no excessive force is applied.

◎ The external appearance / specifications of this product can be modified for improvements without notices.

1N=0.102kgf=0.2248lbs.
1mm=0.03937inch

Introducing the IKO Mechatronics Series Special Site

The IKO Mechatronics Series Special Site is easily accessible from the homepage of the IKO website (www.ikont.co.jp/eg). Various services are available to help with mechatronics product selection, including a Simple Selection Tool. Feel free to utilize this site as often as needed.

https://www.ikont.co.jp/eg/



1. Technical Calculations

With the Life Calculation tool on the Mechatronics Series Special Site, you can calculate the rating life by load by entering usage conditions. In addition, you can calculate the required motor torque by using the Motor Torque Calculation, and calculate the effective thrust force by using the Linear Motor Table Operational Thrust Calculation. Calculation results can be output in PDF format.

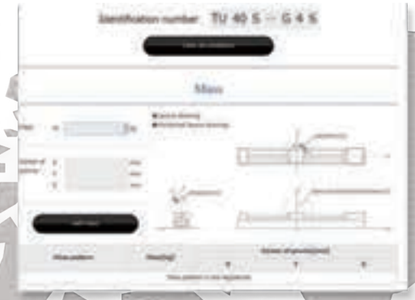

2. Simple Selection Tool for Mechatronics Series Products

The Simple Selection Tool on the Mechatronics Series Special Site helps you select the ideal mechatronics product based on your usage. It takes into account speed, stroke and carrying mass and is able to select specifications from selected part numbers and provide an identification number to you for easy ordering. You can also check specifications, download CAD data and calculate product life. Selection results can be output in PDF format.



3. CAD Data Download

2- and 3-dimensional CAD data

It is linked to the mechanical parts CAD library "PART community". Enter your specifications in the Detail area and then review the 2D/3D CAD data that meets those specifications, free of charge.



4. Product Catalog and Instruction Manual Downloads

Mechatronics Series product catalogs and instruction manuals in PDF format*, and support software* for Precision Positioning Tables can be downloaded from the IKO website. If you would like a printed catalog, please visit our website to request one, or contact your local branch or sales office.

* Mechatronics Series instruction manuals and support software can be downloaded from the IKO Technical Service Site of the IKO website.

Oil Minimum

IKO Gentle to The Earth

Nippon Thompson Co., Ltd. is working to develop global environment-friendly products.
It is committed to developing products that make its customers' machinery and equipment more reliable, thereby contributing to preserving the global environment.
This development stance manifests well in the keyword "**Oil Minimum.**"
Our pursuit of Oil Minimum has led to the creation of IKO's proprietary family of lubricating parts as "C-Lube."

- IKO Linear Motion Rolling Guides are manufactured through a control system that alleviates their impact on the global environment to meet the quality requirements of ISO 14001 in compliance with the quality requirements level of ISO 9001 for quality improvement.
- The standard products listed in this catalog comply with the specifications of the ten hazardous materials cited in the European RoHS Directive.

NIPPON THOMPSON CO., LTD. (JAPAN)

Head Office : 19-19, Takanawa 2-chome, Minato-ku, Tokyo, 108-8586, Japan
Phone : +81 (0)3-3448-5850
Fax : +81 (0)3-3447-7637
E-mail : ntt@ikonet.co.jp
URL : https://www.ikont.co.jp/eg/
Plant : Gifu, Kamakura

IKO INTERNATIONAL, INC. (U.S.A.)

East Coast Operations (Sales Head Office)
91 Walsh Drive,
Parsippany, NJ, 07054,
U.S.A.
Phone : +1-973-402-0254
Toll Free : +1-800-922-0337
Fax : +1-973-402-0441
E-mail : eco@ikonet.co.jp

Midwest Operations
101 Mark Street, Unit-G,
Wood Dale, IL, 60191,
U.S.A.
Phone : +1-630-766-6464
Toll Free : +1-800-323-6694
Fax : +1-630-766-6869
E-mail : mwo@ikonet.co.jp

Minnesota Sales Office
1500 McAndrews Road West, Suite 210,
Burnsville, MN, 55337,
U.S.A.
Phone : +1-952-892-8415
Toll Free : +1-800-323-6694
Fax : +1-952-892-1722
E-mail : mwo@ikonet.co.jp

West Coast Operations
9830 Norwalk Boulevard, Suite 198,
Santa Fe Springs, CA, 90670,
U.S.A.
Phone : +1-562-941-1019
Toll Free : +1-800-252-3665
Fax : +1-562-941-4027
E-mail : wco@ikonet.co.jp

Silicon Valley Sales Office
1500 Wyatt Drive, Suite 10,
Santa Clara, CA, 95054,
U.S.A.
Phone : +1-408-492-0240
Toll Free : +1-800-252-3665
Fax : +1-408-492-0245
E-mail : wco@ikonet.co.jp

Southeast Operations
3235 Satellite Boulevard Building 400, Suite 230,
Duluth, GA, 30096,
U.S.A.
Phone : +1-770-418-1904
Toll Free : +1-800-874-6445
Fax : +1-770-418-9403
E-mail : seo@ikonet.co.jp

Southwest Operations
8105 N. Beltline Road, Suite 130,
Irving, TX, 75063,
U.S.A.
Phone : +1-972-929-1515
Toll Free : +1-800-295-7886
Fax : +1-972-915-0060
E-mail : swo@ikonet.co.jp

IKO THOMPSON BEARINGS CANADA, INC.(CANADA)

731-2425, Matheson Boulevard East, 7th floor,
Mississauga, Ontario, L4W 5K4, Canada
Phone : +1-905-361-2872
Fax : +1-905-361-6401
E-mail : itc@ikonet.co.jp

IKO BRASIL SERVIÇOS EMPRESARIAIS EIRELI (BRAZIL)

Rua Frei Caneca 1407,
Condominio Edificio Barão de Monte Cedro,
Cjs. 801/802, Consolação, São Paulo- SP
Cep: 01307-909
Phone : +55 (0)11-2366-3033
E-mail : itb@ikonet.co.jp

NIPPON THOMPSON EUROPE B.V. (EUROPE)

The Netherlands (Sales Head Office)
Keersopstraat 35,
3044 EX, Rotterdam,
The Netherlands
Phone : +31 (0)10-462 68 68
E-mail : nte@ikonet.co.jp

Germany Branch
Mündelheimer Weg 54,
40472 Düsseldorf,
Germany
Phone : +49 (0)211-41 40 61
Fax : +49 (0)211-42 76 93
E-mail : ntd@ikonet.co.jp

Regensburg Sales Office
Im Gewerbepark D 30,
93059 Regensburg,
Germany
Phone : +49 (0)941-20 60 70
Fax : +49 (0)941-20 60 719
E-mail : ntdr@iko-nt.de

Neunkirchen Sales Office
Gruben Str. 95c,
66540 Neunkirchen,
Germany
Phone : +49 (0)6821-99 98 60
Fax : +49 (0)6821-99 98 626
E-mail : ntdn@iko-nt.de

U.K. Branch
2 Vincent Avenue, Crownhill,
Milton Keynes, Bucks, MK8 0AB,
United Kingdom
Phone : +44 (0)1908-566144
Fax : +44 (0)1908-565458
E-mail : sales@iko.co.uk

Spain Branch
Autovia Madrid-Barcelona, Km. 43,700
Polig. Ind. AIDA - Nove A-8, Ofic. 2-1ª
19200-Azuqueca de Henares,
(Guadalajara) Spain
Phone : +34 949-26 33 90
Fax : +34 949-26 31 13
E-mail : nts@ikonet.co.jp

France Branch
Bâtiment le Raphaël-Paris, Nord 2,
22 avenue des Nations
BP54394 Villepinte
95943 ROISSY C.D.G Cedex
France
Phone : +33 (0)1-48 16 57 39
Fax : +33 (0)1-48 16 57 46
E-mail : ntf@ikont.eu

IKO THOMPSON ASIA CO., LTD. (THAILAND)

1-7 Zuellig House, 3rd Floor,
Silom Road, Silom, Bangrak,
Bangkok 10500, Thailand
Phone : +66 (0)2-637-5115
Fax : +66 (0)2-637-5116
E-mail : ita@ikonet.co.jp

See you again at
IKO Website
https://www.ikont.co.jp/eg/

IKO THOMPSON KOREA CO.,LTD. (KOREA)

201, Worldvision Bldg., 77-1, Yeouinaru-ro,
Yeongdeungpo-gu, Seoul, Korea
Phone : +82 (0)2-6337-5851
Fax : +82 (0)2-6337-5852
E-mail : itk@ikonet.co.jp

IKO-THOMPSON (SHANGHAI) LTD. (CHINA)

Shanghai (Sales Head Office)
1608-10, MetroPlaza No.555, LouShanGuan Road, ChangNing District, Shanghai,
People's Republic of China, 200051
Phone : +86 (0)21-3250-5525
Fax : +86 (0)21-3250-5526
E-mail : ntc@ikonet.co.jp

Beijing Branch
Room1506, Jingtai Tower,
NO.24, Jianguomenwai Avenue,
Chaoyang District, Beijing
People's Republic of China, 100022
Phone : +86 (0)10-6515-7681
Fax : +86 (0)10-6515-7689
E-mail : ntc@ikonet.co.jp

Guangzhou Branch
Room 834, Garden Tower, Garden Hotel
368 Huanshi East Road, Yuexiu District, Guangzhou, Guangdong
People's Republic of China, 510064
Phone : +86 (0)20-8384-0797
Fax : +86 (0)20-8381-2863
E-mail : ntc@ikonet.co.jp

Wuhan Branch
Room 2300, Truroll Plaza No.72, Wusheng Road,
Qiao kou District, Wuhan, Hubei,
People's Republic of China, 430033
Phone : +86 (0)27-8556-1610
Fax : +86 (0)27-8556-1630
E-mail : ntc@ikonet.co.jp

Shenzhen Branch
Room1808, KEENSTAR Building 18,
Chuangye 2nd Rd 248, Bao'an, Shenzhen, Guangdong,
People's Republic of China, 518081
Phone : +86 (0)755-2265-0553
Fax : +86 (0)755-2298-0665
E-mail : ntc@ikonet.co.jp

Ningbo Office
Room 3406, Zhongnongxin Building, No.181,
Zhongshan East Road, Haishu Ward, Ningbo,
Zhejiang,
People's Republic of China, 315000
Phone : +86 (0)574-8718-9535
Fax : +86 (0)574-8718-9533
E-mail : ntc@ikonet.co.jp

Qingdao Office
Room 1111, Building 9, Qingdao Science and Technology City, No. 7 Wuyang Road,
North District, Qingdao City, Shandong,
People's Republic of China, 266045
Phone : +86 (0)532-8670-2246
Fax : +86 (0)532-8670-2242
E-mail : ntc@ikonet.co.jp

Shenyang Office
2-1203 Tower I. City Plaza Shenyang NO.206,
Nanjing North Street, Heping District, Shenyang,
People's Republic of China, 110001
Phone : +86 (0)24-2334-2662
Fax : +86 (0)24-2334-2442
E-mail : ntc@ikonet.co.jp